HAMILTON DENTAL

222 CHAMBLESS LN,
HAMILTON, GA 31811

PROJECT NUMBER: 22016

ISSUED FOR CONSTRUCTION

08/02/23

LOCATION

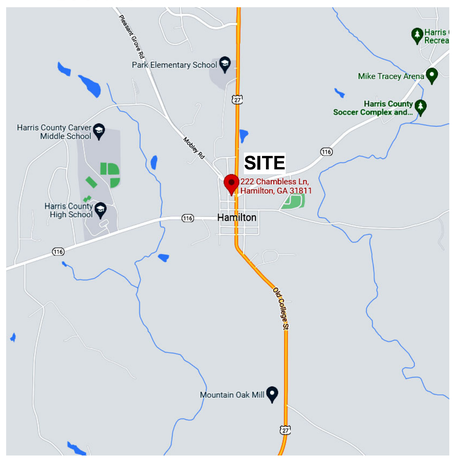

TOTAL PROJECT SQUARE FOOTAGE: 11,780 SF

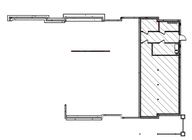

BASEMENT -1,204 SF

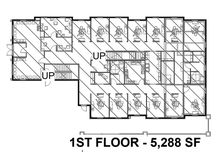

1ST FLOOR - 5,288 SF

2ND FLOOR - 5,288 SF

PLOT DATE: 12/11/2018 7:06:02 AM

PROJECT SUMMARY

THIS PROJECT IS A NEW CONSTRUCTION DENTAL OFFICE BUILDING, APPROXIMATELY 11,776 SQ. FT. IN SIZE.

THE PROPOSED SCOPE OF WORK INCLUDES SITE WORK, EXISTING BUILDING DEMOLITION, AND NEW CONSTRUCTION

THERE IS NO EXISTING OR PROPOSED HIGH PILE STORAGE WITH THIS PROJECT

PROJECT DIRECTORY

ARCHITECT

ALL ARCHITECTURE, LLC
2052 CHRYSLER DRIVE NE
ATLANTA, GA 30345
CONTACT: JUAN C. ARCHILA, AIA, NCARB, LEED AP
PHONE: 404-316-2896
E-MAIL: JUAN@ALLARCHLLC.COM

STRUCTURAL ENGINEER

STABILITY ENGINEERING
1376 CHURCH ST
SUITE 200
DECATUR, GA 30030

CONTACT: JAMES BREEDEN
PHONE: 404-377-9316
E-MAIL: JBREEDEN@STABILITYENGINEERING.COM

MECHANICAL, PLUMBING & ELECTRICAL ENGINEERS

PROFICIENT ENGINEERING, INC.
6991 PEACHTREE INDUSTRIAL BLVD
BUILDING 700
NORCROSS, GA 30092

CONTACT: NAZMUL CHOWDHURY
PHONE: 404-330-9798
E-MAIL: NCHOWDHURY@PROFICIENTENGINEERING.COM

DENTAL EQUIPMENT SUPPLIER

HENRY SCHEIN INTEGRATED DESIGN STUDIO
10920 W LINCOLN AVE
WEST ALLIS, WI 53227
CONTACT: ANDY WILDES
PHONE: 229-300-8181
E-MAIL: ANDY.WILDES@HENRYSCHEIN.COM

CONTRACTOR

STROUD AND COMPANY
427 8TH ST
MACON, GA 31201
CONTACT: CHUCK STROUD
PHONE: 478-743-5097
E-MAIL: CGSTROUD@STROUDANDCOMPANY.COM

OWNER

HAMILTON FAMILY DENTISTRY
PHONE: (706) 528-6165

CODE SUMMARY

JURISDICTION

CITY OF HAMILTON, GEORGIA

APPLICABLE CODES

BUILDING: INTERNATIONAL BUILDING CODE, 2018 EDITION WITH GA AMENDMENTS (2020)(2022)
LIFE SAFETY: NFPA 101 LIFE SAFETY CODE (LSC), 2018 EDITION WITH 2020 GEORGIA STATE FIRE COMMISSIONER AMENDMENTS 120-3-3.04(72)
FIRE: INTERNATIONAL FIRE CODE, 2018 EDITION WITH 2020 GEORGIA STATE FIRE COMMISSIONER AMENDMENTS 120-3-3-.04
MECHANICAL: INTERNATIONAL MECHANICAL CODE, 2018 EDITION WITH GA AMENDMENTS (2020)
PLUMBING: INTERNATIONAL PLUMBING CODE, 2018 EDITION WITH GA AMENDMENTS (2020)(2022)
ELECTRICAL: INTERNATIONAL FUEL GAS CODE, 2018 EDITION WITH GA AMENDMENTS (2020)(2022)
ENERGY: NATIONAL ELECTRIC CODE, 2020 EDITION WITH GA AMENDMENTS (2021)
ACCESSIBILITY: INTERNATIONAL ENERGY CONSERVATION CODE, 2015 EDITION WITH GA AMENDMENTS (2020)(2022) GEORGIA ACCESSIBILITY CODE 120-3-20 (.01-.08) WITH 2020 GEORGIA STATE FIRE COMMISSIONER AMENDMENTS 120-3-3-.08 THROUGH 11 /
OTHER: 2010 DEPARTMENT OF JUSTICE ADA STANDARDS FOR ACCESSIBLE DESIGN ("201 0 ADA") CURRENT EDITION OF NFPA CODES AND STANDARDS AS ADOPTED AND MODIFIED BY THE STATE FIRE MARSHAL

DEFERRED SUBMITTALS

THE FOLLOWING ITEMS WILL BE SUBMITTED AS DEFERRED SUBMITTALS BY THE APPROPRIATE INSTALLING SUBCONTRACTOR OR VENDOR. SUBCONTRACTOR OR VENDOR SHALL BE RESPONSIBLE FOR DETERMINING SUBMITTAL REQUIREMENTS AND PAYMENT OF ALL FEES FOR SUBMITTALS.
1. EXTERIOR SIGNAGE
2. FIRE ALARM

BUILDING DATA

OCCUPANCY CLASSIFICATION (IBC CHAPTER 3)
B BUSINESS OCCUPANCY
NFPA 101 LSC CHAPTER 38, NEW BUSINESS OCCUPANCIES

DESCRIPTION: NEW CONSTRUCTION

EXISTING BUILDING INFORMATION
SPRINKLERS (IBC 903, LSC 9.7.1): NO

STANDPIPES (IBC 905, LSC 9.7.4.2): NO

HIGH RISE (IBC 403): NO

MEZZANINE (IBC 505): NO

FIRE ALARM (IBC 907, LSC 9.6): YES

CONSTRUCTION TYPE:
V-B, UNPROTECTED (IBC TABLE 602.2)

TYPE V (0,0,0) UNPROTECTED (LSC TABLE A.8.2.1)

BUILDING HEIGHT:
ALLOWED: 40' (IBC TABLE 504.3)
EXISTING: 27'-Q"±

NUMBER OF STORIES:
ALLOWED: 2 (IBC TABLE 504.4)
PROPOSED: 2

TOTAL SQUARE FOOTAGE:
ALLOWABLE: 13,500 SF (IBC TABLE 506.2)
PROPOSED: 11,780 SF±

CONSTRUCTION SQUARE FOOTAGE
11,780 SF±

TOTAL OCCUPANCY LOAD (NFPA 101 LSC TABLE 7.3.1.2)
159

REFER TO CALCULATIONS ON LIFE SAFETY PLAN

OF EXITS REQUIRED: 2
OF EXITS PROVIDED: 3

GENERAL CODE COMPLIANCE NOTES

A. FIELD VERIFY ALL DIMENSIONS. DO NOT SCALE FROM DRAWINGS. ANY DISCREPANCIES ARE TO BE REPORTED IMMEDIATELY TO THE ARCHITECT BEFORE PROCEEDING WITH THE WORK.

B. ALL PENETRATIONS THROUGH PERIMETER FIRE AND SMOKE BARRIERS SHALL BE SEALED AND PROTECTED PER NFPA 101-8.3.6.

C. CONTRACTOR SHALL COMPLY WITH NFPA 241 & IFC 2018 CHAPTER 14.

D. PROTECT EXISTING FLOOR AND WALL FINISHES TO REMAIN AND PATCH/REPAIR ANY DAMAGE AFTER DEMOLITION

E. SUITE NUMBER SHALL BE DISPLAYED ON ALL EXTERIOR DOORS, INCLUDING REAR DOORS, OF THE TENANT SPACE. THE NUMBERS SHALL BE A MINIMUM OF 4" IN HEIGHT ON A CONTRASTING COLOR IN BACKGROUND.

F. EMERGENCY LIGHTING SHALL COMPLY WITH THE REQUIREMENTS OF NFPA 101 LSC 2018 CHAP. 7 SECT. 7.9.

G. EXIT LIGHTING SHALL COMPLY WITH THE REQUIREMENTS OF NFPA NFPA 101 LSC 2018 CHAP. 7 SECT. 7.1 0.

H. EXIT LIGHTING AND EMERGENCY LIGHTING WILL BE EVALUATED FOR LOCATION AND REQUIRED LIGHTING INTENSITY AT FINAL INSPECTION BY AUTHORITY HAVING JURISDICTION.

J. PENETRATIONS INTO OR THROUGH EITHER VERTICAL OR HORIZONTAL FIRE RATED BARRIERS SHALL BE PROTECTED BY A SYSTEM LISTED BY A RECOGNIZED TESTING AGENCY. NO PENETRATIONS THROUGH FIRE RATED BARRIERS SHOULD BE PART OF THIS PROJECT, HOWEVER, ALERT ARCHITECT IF IT IS NECESSARY AND AWAIT UL-LISTED DETAIL.

K. CIRCUITS FOR EXIT AND/OR EMERGENCY LIGHTING SHALL BE CONNECTED TO THE LIGHTING CIRCUIT FOR THE AREA THEY SERVE. DEDICATED CIRCUITS ARE NOT PERMITTED. THEY SHALL COMPLY WITH THE REQUIREMENTS OF NFPA 101 LSC 2018 CHAP. 7 SECTION 7/9.2.2 AND SECT. 7.10.4 AND NFPA 70 NEC 2020 CHAP. 700 SECT. 700.17,

L. FIRE EXTINGUISHERS SHALL BE PROVIDED PER THE REQUIREMENTS OF THE OCCUPANCY CHAPTER FOR THIS PROJECT. NFPA 101 LSC 2018 AS AMENDED BY OCGA TITLE 25 120-3-3 FIRE EXTINGUISHERS SHALL BE INSTALLED PER THE REQUIREMENTS OF THE GEORGIA ACCESSIBILITY CODE 2010 120-3-20A CHAP. 3 SECT. 308. FIRE EXTINGUISHERS WILL BE EVALUATED FOR LOCATION AND SIZE AT FINAL INSPECTION.

M. FIRE EXTINGUISHERS SHALL DISPLAY A SERVICE TAG INSTALLED BY A TECHNICIAN CERTIFIED BY THE STATE OF GEORGIA, OCGA TITLE 25. FIRE MARSHALS RULES AND REGULATIONS.

N. INTERIOR WALL AND CEILING FINISHES SHALL BE CLASSIFIED AS FOLLOWS AND SHALL BE RESTRICTED FOR USE BY THE FOLLOWING TABLE AS DEFINED IN NFPA 101 LSC 2018 10.2.3.3:

CLASS	FLAME SPREAD	SMOKE DEVELOPMENT
A	0-25	0-450
B	26-75	0-450
C	76- 100	0-450

REQUIRED WALL AND CEILING FINISHES PER PROJECT USE GROUPS ARE AS FOLLOWS (REFERENCE NFPA 101 LSC 12.3.3). CONTRACTOR TO VERIFY EXISTING AND UPGRADE TO THE FOLLOWING IF NECESSARY:

FINISH CLASSIFICATION			
USE GROUP	EXIT ENCLOSURES	CORRIDORS	ROOMS
B	B	B	C

SHEET INDEX

SHEET NUMBER	SHEET NAME	ISSUED FOR CONSTRUCTION
00 - GENERAL		
A000	COVER PAGE	08/02/2023
A001	GENERAL NOTES & LEGENDS	08/02/2023
A002	TYPICAL DETAILS	08/02/2023
A010	LIFE SAFETY PLANS	08/02/2023
01 - ARCHITECTURE		
A020	EXISTING ARCH. SITE PLAN	08/02/2023
A021	PROPOSED ARCH. SITE PLAN	08/02/2023
A100	BASEMENT FLOOR PLAN	08/02/2023
A101	1ST FLOOR PLAN	08/02/2023
A102	2ND FLOOR PLAN	08/02/2023
A103	ROOF PLAN	08/02/2023
A110	BASEMENT REFL. CLG PLAN	08/02/2023
A111	1ST FLOOR REFL. CLG PLAN	08/02/2023
A112	2ND FLOOR REFL. CLG PLAN	08/02/2023
A200	ENLARGED PLANS	08/02/2023
A201	ENLARGED PLANS - STAIRS	08/02/2023
A300	EXTERIOR ELEVATIONS	08/02/2023
A301	EXTERIOR ELEVATIONS	08/02/2023
A400	BUILDING SECTIONS	08/02/2023
A401	BUILDING SECTIONS	08/02/2023
A410	WALL SECTIONS AND DETAILS	08/02/2023
A411	WALL SECTIONS AND DETAILS	08/02/2023
A412	WALL SECTIONS AND DETAILS	08/02/2023
A500	FINISH SCHEDULES	08/02/2023
A510	BASEMENT FINISH PLAN	08/02/2023
A511	1ST FLOOR FINISH PLAN	08/02/2023
A512	2ND FLOOR FINISH PLAN	08/02/2023
A530	INTERIOR ELEVATIONS	08/02/2023
A531	INTERIOR ELEVATIONS	08/02/2023
A532	INTERIOR ELEVATIONS	08/02/2023
A533	INTERIOR ELEVATIONS	08/02/2023
A540	MILLWORK DETAILS	08/02/2023
A600	WINDOW AND DOOR SCHEDULES	08/02/2023
02 - STRUCTURAL		
S-0.0	GENERAL NOTES	08/02/2023
S-0.1	GENERAL NOTES	08/02/2023
S-1.0	BASEMENT PLAN	08/02/2023
S-1.1	FIRST FLOOR PLAN	08/02/2023
S-1.2	SECOND FLOOR FRAMING PLAN	08/02/2023
S-1.3	ROOF FRAMING PLAN	08/02/2023
S-2.0	FIRST FLOOR SHEARWALL PLAN	08/02/2023
S-2.1	SECOND FLOOR SHEARWALL PLAN	08/02/2023
S-3.0	FOUNDATION DETAILS	08/02/2023
S-3.1	FOUNDATION DETAILS	08/02/2023
S-4.0	FRAMING DETAILS	08/02/2023
03 - MECHANICAL		
M-000	GENERAL	07/25/2023
M-001	DETAILS	07/25/2023
M-002	SCHEDULES	07/25/2023
M-003	SCHEDULES	07/25/2023
M-100	BASEMENT FLOOR PLAN	07/25/2023
M-101	1ST FLOOR PLAN	07/25/2023
M-102	2ND FLOOR PLAN	07/25/2023
M-103	ROOF PLAN	07/25/2023
04 - PLUMBING		
P-001	GENERAL	07/25/2023
P-002	SCHEDULES AND DETAILS	07/25/2023
P-003	SCHEDULES AND DETAILS	07/25/2023
P-100	BASEMENT FLOOR PLAN PLUMBING	07/25/2023
P-101	1ST FLOOR PLAN - SANITARY	07/25/2023
P-102	2ND FLOOR PLAN - SANITARY	07/25/2023
P-110	BASEMENT FLOOR PLAN AIR AND VACUUM	07/25/2023
P-111	1ST FLOOR PLAN - WATER	07/25/2023
P-112	2ND FLOOR PLAN - WATER	07/25/2023
P-121	1ST FLOOR PLAN - AIR & VACUUM	07/25/2023
05 - ELECTRICAL		
E-001	GENERAL	07/25/2023
E-002	ONE-LINE DIAGRAM AND SCHEDULES	07/25/2023
E-003	SCHEDULES	07/25/2023
E-004	COMPLIANCE REPORT	07/25/2023
E-100	BASEMENT FLOOR PLAN - ELECTRICAL	07/25/2023
E-101	FIRST FLOOR PLAN - POWER	07/25/2023
~~E-102~~	~~2ND FLOOR PLAN - POWER~~	~~07/25/2023~~
~~E-103~~	~~BASEMENT FLOOR PLAN - ELECTRICAL~~	~~07/25/2023~~
~~E-111~~	~~1ST FLOOR PLAN - LIGHTING~~	~~07/25/2023~~
~~E-112~~	~~2ND FLOOR PLAN - LIGHTING~~	~~07/25/2023~~
E-201	1ST FLOOR PLAN - LIGHITNG	07/25/2023
E-202	2ND FLOOR PLAN - LIGHITNG	07/25/2023
~~SED.1~~	~~DENTAL EQUIPMENT DETAILS~~	~~07/25/2023~~
SED.2	DENTAL EQUIPMENT DETAILS	07/25/2023
SED.3	DENTAL EQUIPMENT DETAILS	07/25/2023
06 - DENTAL EQUIPMENT		
1 - SCV	COVER SHEET	08/02/23
2 - SA.1	1ST FLOOR DENTAL EQUIPMENT FLOOR PLAN	08/02/23
3 - SA.2	2ND FLOOR DENTAL EQUIPMENT FLOOR PLAN	08/02/23
4 - SA.3	BASEMENT DENTAL EQUIPMENT FLOOR PLAN	08/02/23
5 - SR.1	1ST FLOOR DENTAL REINFORCEMENT PLAN	08/02/23
6 - SR.2	2ND FLOOR DENTAL REINFORCEMENT PLAN	08/02/23
7 - SR.3	BASEMENT DENTAL REINFORCEMENT PLAN	08/02/23
8 - SP.1	1ST FLOOR DENTAL PLUMBING SPECIFICATIONS	08/02/23
9 - SP.2	2ND FLOOR DENTAL PLUMBING SPECIFICATIONS	08/02/23
10 - SP.3	BASEMENT DENTAL PLUMBING SPECIFICATIONS	08/02/23
11 - SE.1	1ST FLOOR DENTAL ELECTRICAL SPECIFICATIONS	08/02/23
12 - SE.2	2ND FLOOR DENTAL ELECTRICAL SPECIFICATIONS	08/02/23
13 - SE.3	BASEMENT DENTAL ELECTRICAL SPECIFICATIONS	08/02/23
14 - SED.1	DENTAL EQUIPMENT DETAILS	08/02/23
15 - SED.2	DENTAL EQUIPMENT DETAILS	08/02/23
16 - SED.3	DENTAL EQUIPMENT DETAILS	08/02/23
17 - SED.4	DENTAL EQUIPMENT DETAILS	08/02/23

E-103 IS AN OLD DRAWING

E-201 & E-202 ARE OLD DRAWINGS

STROUD AND COMPANY
427 8th Street · Macon, Ga 31201
478-743-5097

ALL Architecture, LLC
2052 CHRYSLER DRIVE NE, ATLANTA, GA 30345
TELEPHONE: (404) 316-2896
E-MAIL: INFO@ALLARCHLLC.COM

REVISIONS
NO. | DATE

COPYRIGHT
THIS DRAWING AND ALL REPRODUCTIONS ARE COPYRIGHTED AND THE PROPERTY OF ALL ARCHITECTURE, LLC AND MAY NOT BE USED IN ANY WAY WITHOUT THEIR PERMISSION.

PROJECT TITLE:
HAMILTON DENTAL
222 CHAMBLESS LN,
HAMILTON, GA 31811

STATE OF GEORGIA
JUAN CAMILO ARCHILA
CERTIFICATE NO. 12114
6-2-23
REGISTERED ARCHITECT

DRAWN: JLL	CHECKED: JCA
APPROVED: JCA	ISSUE DATE: 08/02/23

CAD FILE NAME:
-

SHEET TITLE:
COVER PAGE

PROJECT NUMBER:
22016

SHEET NO:
A000

SHEET OF

ISSUED FOR CONSTRUCTION

ARCHITECTURAL SYMBOL LEGEND

ROOM TAG

OFFICE
100

ROOM NAME
ROOM NUMBER

ROOM FINISH TAG

OFFICE
100
FL-1 / FL-2
WB-1 /WB-2
IP-1 IP-4
C-1 / C-2

ROOM NAME
ROOM NUMBER
FLOOR FINISH / FINISHES
WALL BASE / BASES
WALL FINISH / FINISHES
CEILING TYPE / FINISH

FRAME ELEVATION TAGS

F10

FRAME NUMBER

NOTE: SEE FRAME ELEVATIONS FOR ADDITIONAL INFORMATION

WALL TAGS

W4A0

PARTITION CATEGORY (METAL, WOOD, MASONRY, ETC)

PARTITION RATING

PARTITION MODIFIER GWB, PLYWOOD, METAL. OSB, ETC)

PARTITION SIZE NOMINAL THICKNESS OF STUD OR UNIT

NOTE: SEE WALL TYPE LEGEND FOR ADDITIONAL INFORMATION

DOOR TAGS

100

DOOR SWING

DOOR NUMBER ADJACENT TO DOOR

DOOR SLAB / LEAF

DOORS WITH AN "**E**" DESIGNATION ARE **EXISTING** DOORS

ELEVATION MARKER

1
A101

DETAIL NUMBER
SHEET NUMBER

SECTION MARKER

1
A101

DETAIL NUMBER
SHEET NUMBER

DETAIL CALLOUT

1
A101

DETAIL NUMBER
SHEET NUMBER

REVISION CLOUD

1

REVISION TRIANGLE
REVISION CLOUD

FIRE EXTINGUISHERS

FE

SURFACE MOUNTED FIRE EXTINGUISHER, SEE SPECS

FEC

PARTITION AS SCHEDULED
RECESSED FIRE EXTINGUISHER CABINET, SEE SPECS

NEED SPEC FOR FIRE EXT. CABINET

DIMENSION LINE TYPES

12' - 0"

GRID LINE DIMENSIONS

OPEN DOTTED TICK MARK ON A DIMENSION LINE INDICATES C.L. OF GRID LINES & OR FACE OF STRUCTURE

12' - 0"

TYPICAL DIMENSION LINE

DIAGONAL TICK MARK ON A DIMENSION LINE INDICATES THE CLEAR DIMENSION OF A ROOM & OR THE OVERALL LENGTH / HEIGHT OF THE ITEM BEING DIMENSIONED

GENERAL CONSTRUCTION NOTES

1. ALL NEW CONSTRUCTION SHALL COMPLY WITH ALL APPLICABLE BUILDING CODES AND RESTRICTIVE ORDINANCES FOR CONSTRUCTION, PLUMBING, ELECTRICAL AND MECHANICAL. DO NOT SCALE DRAWINGS
2. THE INTENT OF THESE DRAWINGS IS TO PROVIDE THE BUILDER GENERAL GUIDELINES FOR SOUND CONSTRUCTION OF THE STRUCTURE INDICATED WITHIN
3. DEVIATIONS FROM THESE DRAWINGS ARE AT THE BUILDERS RISK UNLESS APPROVED IN WRITING OR WITH SUPPLEMENTARY DRAWINGS FROM ALL ARCHITECTURE, LLC
4. IT IS REQUIRED THAT THE SERVICES OF A REGISTERED LAND SURVEYOR BE EMPLOYED FOR THE PROPER PLACECEMENT OF THE STRUCTURE IN RELATION TO PROPERTY LINES. SETBACK LINES. EASEMENTS. ETC
5. IT IS THE RESPONSIBILITY OF THE OWNER AND/ OR THE CONTRACTOR TO CHECK THE STATE AND LOCAL BUILDING CODES. SUBDIVISION RESTRICTIONS AND HEALTH DEPARTMENT GUIDELINES AND ADHERE TO THEIR REQUIREMENTS
6. ANY DISCREPANCIES CONTAINED WITHIN THE FOLLOWING DRAWINGS/DOCUMENTS ARE TO BE IMMEDIATELY REPORTED TO ALL ARCHITECTURE LLC AT 404-316-2896 BEFORE PROCEEDING WITH WORK IN QUESTION
7. ALL WOOD IN CONTACT WITH CONCRETE AND/OR EXPOSED TO THE EXTERIOR ELEMENTS TO BE PRESSURE TREATED
8. IF APPLICABLE. G.C. TO VERIFY & ADHERE TO FIREPLACE MANUFACTURER AND CODE REQUIREMENTS FOR MIN. CLEARANCES OF COMBUSTIBLE MATERIALS AROUND FIREPLACE, INCLUDING, BUT NOT LIMITED TO, FRAMING, SURROUNDING MATERIAL, HEARTH, & FLUE
9. ALL TOILETS MUST HAVE VENTILATION FAN ABOVE IN CEILING IN ACCORDANCE WITH GOVERNING BUILDING CODE
10. EXTERIOR PORCHES SHOULD BE SLOPED 1/4" PER FOOT MINIMUM TO ALLOW FOR DRAINAGE OF WATER & TO PREVENT PONDING OF WATER
11. G.C. TO VERIFY GRADE AGAINST STRUCTURE SLOPES AWAY TO DRAIN WATER AWAY FROM STRUCTURE
12. G.C TO VERIFY SOIL CONDITIONS BEFORE POURING FOUNDATION
13. ALL WINDOWS & DOOR SHOP DRAWINGS REQUIRED TO BE REVIEWED & APPROVED BY ARCHITECT AND OWNER PRIOR TO PLACING ORDER
14. G.C. TO VERIFY WITH ARCHITECT, PLACEMENT OF GUTTERS & DOWNSPOUTS PRIOR TO INSTALLATION
15. G.C. TO VERIFY WITH ARCHITECT. PLACEMENT OF VENTS, INCLUDING BUT NOT LIMITED TO DRYER VENTS / EXHAUST VENTS, WHICH ARE LOCATED ON EXTERIOR WALLS
16. G.C TO VERIFY WITH ARCHITECT. MOUNTING HEIGHT & LOCATION OF EXTERIOR LIGHTING PRIOR TO INSTALLATION OF JUNCTION BOXES
17. MASONRY LEDGE TO EXTEND A MINIMUM OF 1'-6" BELOW GRADE@ ANY POINT TO PREVENT VISUAL EXPOSURE OF CONCRETE FOUNDATION
18. G.C. TO COORDINATE ELECTRICAL & PLUMBING REQUIREMENTS FOR APPLIANCES

N/A

19. G.C. TO VERIFY ALL STRUCTURAL MEMBERS NOTED IN ARCHITECTURAL DRAWINGS. INCLUDING. BUT NOT LIMITED TO STUDS, JOISTS. AND RAFTER SIZES AND SPACING, WITH STRUCTURAL DRAWINGS PRIOR TO CONSTRUCTION. IF THERE ARE ANY DISCREPANCIES CONTACT ARCHITECT IMMEDIATELY BEFORE PROCEEDING WITH WORK IN QUESTION
20. ALL EXTERIOR MATERIALS, COLORS. STAINS. ETC TO BE SUBMITTED TO ARCHITECT & OWNER FOR REVIEW & APPROVAL. PRIOR TO FINAL ORDER & INSTALLATION. MATERIAL MOCK-UPS MIGHT BE NECESSARY FOR REVIEW & APPROVAL
21. ALL SILLS & TOPS OF HEADER TRIM AT EXTERIOR WINDOWS TO SLOPE MIN. 5 DEGREES TO SHED WATER PROPERLY
22. ALL WINDOW AND DOOR DIMENSIONS ON SCHEDULE DIMENSIONED TO SASH. IT IS THE GENERAL CONTRACTOR'S RESPONSIBILITY TO COORDINATE ROUGH OPENING SIZES AND REQUIREMENTS WITH THE CHOSEN WINDOW MANUFACTURER

ABBREVIATIONS

ACT	ACOUSTICAL CEILING TILE
A.F.F.	ABOVE FINISH FLOOR
B.O.J.	BOTTOM OF JOIST
B/W	BETWEEN
CLG	CEILING
CONC.	CONCRETE
DIA.	DIAMETER
DWG(S)	DRAWING, DRAWINGS
E, EX, EXIST.	EXISTING
EA.	EACH
EGSB	EXTERIOR GYPSUM SOFFIT BOARD, PAINTED
ELEC.	ELECTRICAL
E.P.	ELECTRICAL PANEL
FAC	FACTORY
FE	WALL-MOUNTED FIRE EXTINGUISHER
FEC	FIRE EXTINGUISHER CABINET
F.O.	FACEOF
GA.	GAUGE
GL	GLASS / GLAZING
GWB	GYPSUM WALL BOARD
HCWD	HOLLOW CORE WOOD DOOR
HT.	HEIGHT
IAW	IN ACCORDANCE WITH
JT.	JOINT
MANUF.	MANUFACTURER
MAT'L	MATERIAL
MECH.	MECHANICAL
MRGB	MOISTURE-RESISTANT GYPSUM WALLBOARD
MTL	METAL
N	NEW
N.I.C.	NOT IN CONTRACT
O.C.	ON CENTER
OCC	OCCUPANT($)
O.H.	OPPOSITE HAND
OFCI	OWNER-FURNISHED, CONTRACTOR-INSTALLED
O.T.S.	OPEN TO STRUCTURE
P.T.	PRESSURE-TREATED
PTD	PAINTED
QTY.	QUANTITY
R	RISER
RCP	REFLECTED CEILING PLAN
REQ'D	REQUIRED
SCWD	SOLID CORE WOOD DOOR
SF	SQUARE FEET
SHT	SHEET
SIM.	SIMILAR
STD	STAINED
STL	STEEL
T	TREAD
U.N.O.	UNLESS NOTED OTHERWISE
V.I.F.	VERIFY IN FIELD
W/	WITH
WD	WOOD

STROUD AND COMPANY
427 8th Street · Macon, Ga 31201
478-743-5097

ALL Architecture, LLC
2052 CHRYSLER DRIVE NE, ATLANTA, GA 30345
TELEPHONE: (404) 316-2896
E-MAIL: INFO@ALLARCHLLC.COM

REVISIONS	
NO.	DATE

COPYRIGHT
THIS DRAWING AND ALL REPRODUCTIONS ARE COPYRIGHTED AND THE PROPERTY OF ALL ARCHITECTURE, LLC AND MAY NOT BE USED IN ANY WAY WITHOUT THEIR PERMISSION.

PROJECT TITLE:

HAMILTON DENTAL
222 CHAMBLESS LN,
HAMILTON, GA 31811

STATE OF GEORGIA
JUAN CAMILO ARCHILA
CERTIFICATE NO. 12110
REGISTERED ARCHITECT
6-2-23

DRAWN:	CHECKED:
JLL	JCA
APPROVED:	ISSUE DATE:
JCA	08/02/23

CAD FILE NAME:
-

SHEET TITLE:

GENERAL NOTES & LEGENDS

PROJECT NUMBER:
22016

SHEET NO:

A001

SHEET OF

ISSUED FOR CONSTRUCTION

PLOT DATE: 12/11/2018 7:06:02 AM

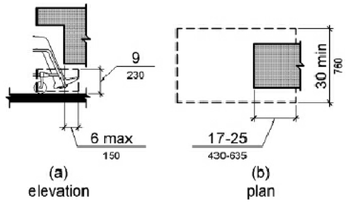

TOE CLEARANCE ADA 2010 FIG. 306.2

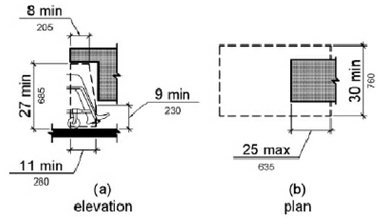

KNEE CLEARANCE ADA 2010 FIG. 306.3

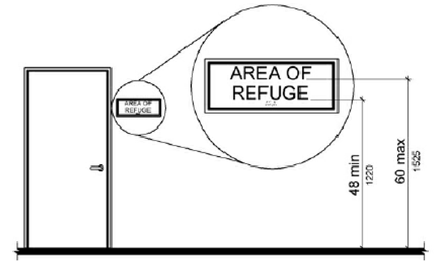

ADA 2010 FIG. 703.4.1
HEIGHT OF TACTILE CHARACTERS ABOVE FINISH FLOOR OR GROUND

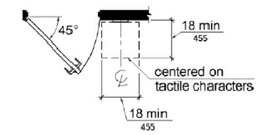

ADA 2010 FIG. 703.4.2
LOCATION OF TACTILE SIGNS AT DOORS

DOOR ACCESSIBILITY REQUIREMENTS ADA 2010 SEC. 404.2

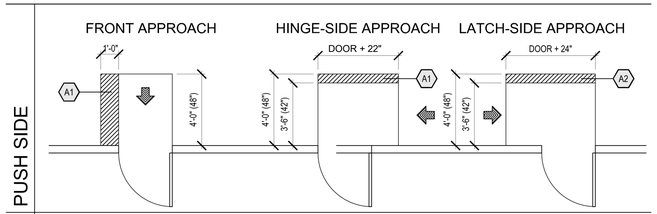

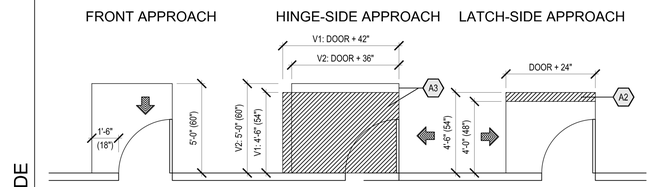

A1 ADDITIONAL CLEAR FLOOR AREA REQUIRED WHEN DOOR HAS BOTH CLOSER AND A LATCH

A2 ADDITIONAL CLEAR FLOOR AREA REQUIRED WHEN DOOR HAS CLOSER

A3 ALTERNATIVE CLEAR FLOOR AREAS BASED ON APPROACH CLEARANCES

CLOSER

EACH DOOR CONTRACTOR(S) (ALUM. STOREFRONT/WOOD/HOLLOW METAL) SHALL BE RESPONSIBLE TO ADJUST ALL INTERIOR DOORS SO THAT THE DOOR'S REQUIRED OPENING FORCE IS 5 lbs OR LESS. ANY DOOR WITH A CLOSER SHALL BE ADJUSTED TO SLOW THE CLOSING TIME TO A MINIMUM OF THREE SECONDS FROM A STARTING POINT OF 70° OPEN TO 3° FROM CLOSING.
REFER TO DIAGRAM:

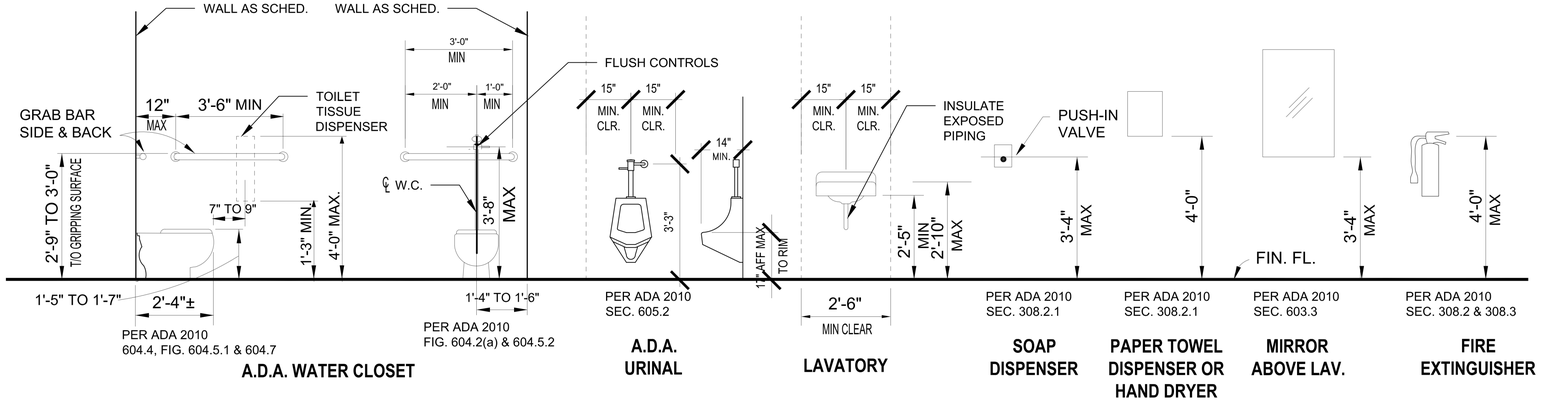

MOUNTING HEIGHTS FOR FIXTURES & ACCESSORIES

SCALE: 1/2" = 1'-0"

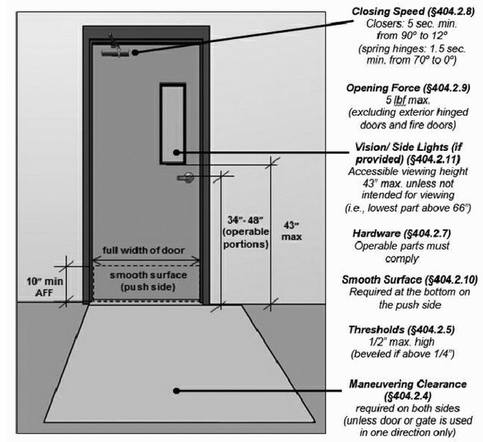

DOOR ACCESSIBILITY DETAIL ELEVATION

NOT TO SCALE

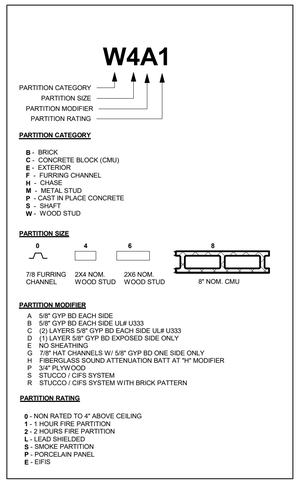

INTERIOR

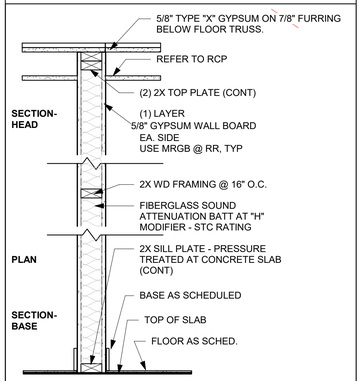

	SIZE	FIRE RATING	UL TEST No	STC RATING
W4A0	2X4	N/A	N/A	H MOD
W6A0	2X6	N/A	N/A	H MOD

INTERIOR

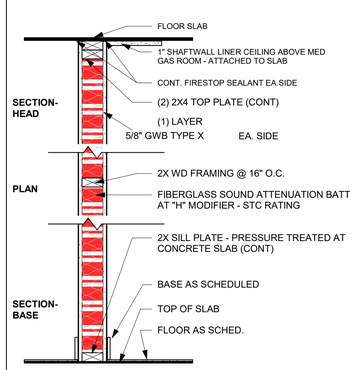

	SIZE	FIRE RATING	UL TEST No	STC RATING
W4C1	2X4	N/A	U333	H MOD
W6C1	2X6	N/A	U333	H MOD

EXTERIOR

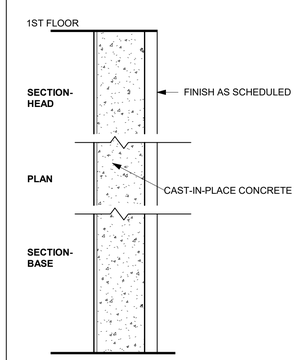

	FINISH	FIRE RATING	UL TEST No	STC RATING
P8S0		N/A	N/A	S MOD
P8R0				

EXTERIOR

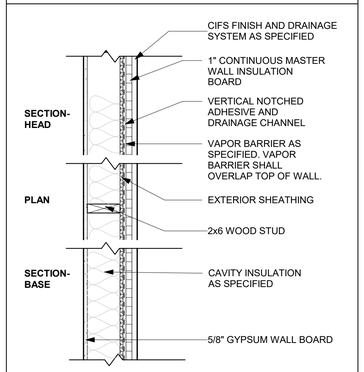

	FINISH	FIRE RATING	UL TEST No	STC RATING
E6S0	SMOOTH	N/A	N/A	S MOD
E6R0	BRICK STAMPED	N/A	N/A	S MOD

WALL TYPE SCHEDULE

TYPE	DESCRIPTION	LOCATION
C8E0	8" CMU WALL	INTERIOR — N/A
E6R0	CIFS ON WOOD STUDS WITH BRICK PATTERN	EXTERIOR
E6S0	CIFS ON WOOD STUDS WITH SMOOTH FINISH	EXTERIOR
P8S0	CAST IN PLACE WALL WITH FINISH AS SCHEDULED	EXTERIOR
W4A0	WOOD STUD PARTITION WITH GYPSUM BOTH SIDES	INTERIOR
W4D1	WOOD STUD PARTITION RATED ONE HOUR	<varies>
W6DO	6" WOOD STUD WITH GYPSUM ONE SIDE ONLY	<varies>

STROUD AND COMPANY
427 8th Street · Macon, Ga 31201
478-743-5097

ALL Architecture, LLC
2052 CHRYSLER DRIVE NE, ATLANTA, GA 30345
TELEPHONE: (404) 316-2896
E-MAIL: INFO@ALLARCHLLC.COM

REVISIONS
NO. | DATE

COPYRIGHT
THIS DRAWING AND ALL REPRODUCTIONS ARE COPYRIGHTED AND THE PROPERTY OF ALL ARCHITECTURE, LLC AND MAY NOT BE USED IN ANY WAY WITHOUT THEIR PERMISSION.

PROJECT TITLE:
HAMILTON DENTAL
222 CHAMBLESS LN,
HAMILTON, GA 31811

STATE OF GEORGIA
JUAN CAMILO ARCHILA
8-2-23
CERTIFICATE NO. 12113
REGISTERED ARCHITECT

DRAWN:	CHECKED:
JLL, DCP	JCA
APPROVED:	ISSUE DATE:
JCA	08/02/23

CAD FILE NAME:
-

SHEET TITLE:
TYPICAL DETAILS

PROJECT NUMBER:
22016

SHEET NO:
A002

SHEET OF

ISSUED FOR CONSTRUCTION

PLOT DATE: 12/11/2018 7:06:02 AM

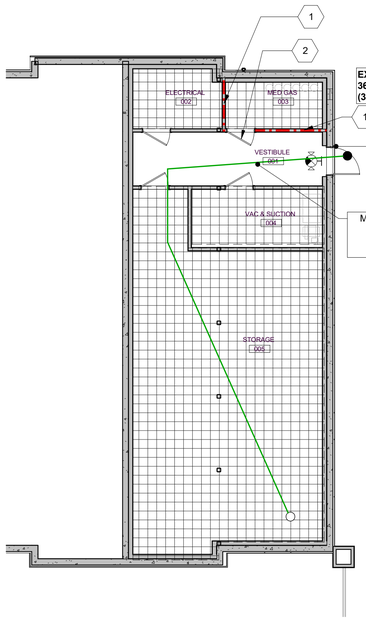

3 A010 LS BASEMENT
1/8" = 1'-0"

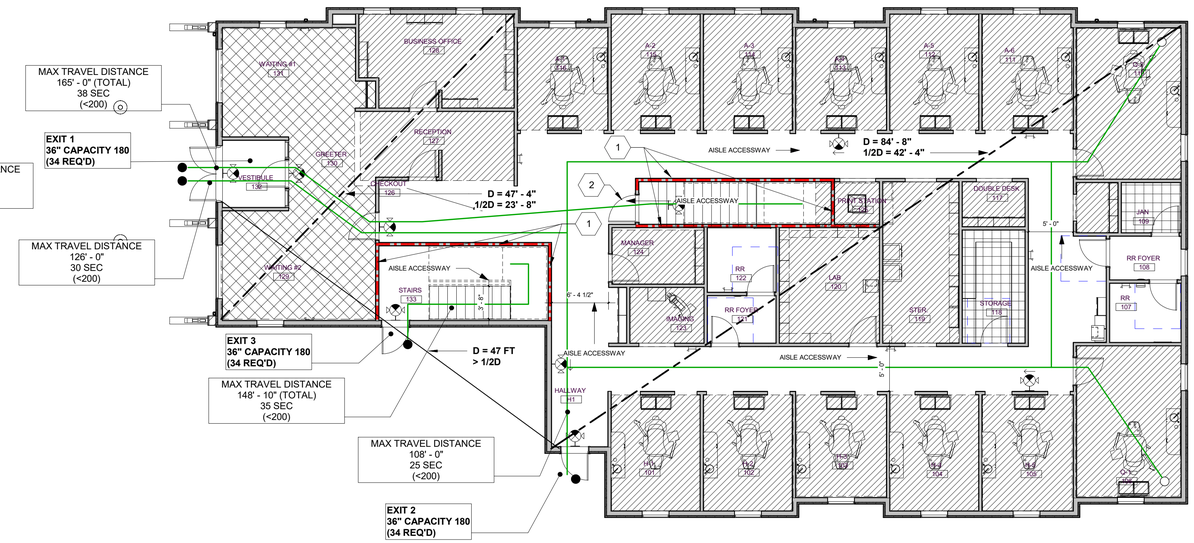

1 A010 LS FIRST FLOOR
1/8" = 1'-0"

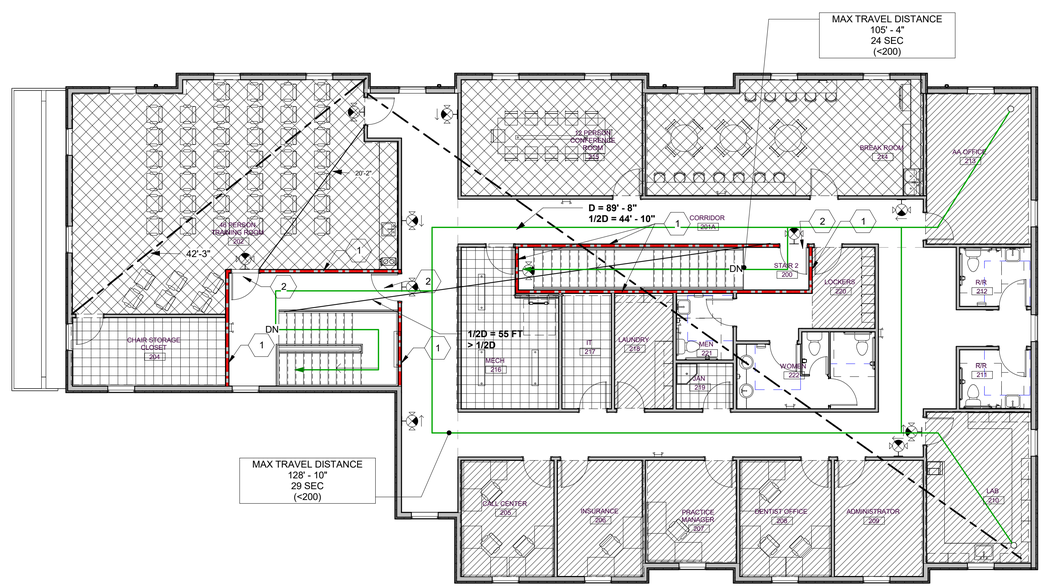

2 A010 LS SECOND FLOOR
1/8" = 1'-0"

OCCUPANT LOAD (LSC TABLE 7.3.1.2)

LEGEND	AREA	SF/OCC	OCC LOAD
OCCUPANCY BUSINESS			**26**
1ST FLOOR	2,588 SF	150	18
2ND FLOOR	1,170 SF	150	8
BASEMENT	-		
OCCUPANCY BUSINESS- WAITING & COLLABORATION ROOMS			**129**
1ST FLOOR	465 SF	15	31
2ND FLOOR	1,464 SF	15	98
BASEMENT	-		
OCCUPANCY STORAGE			**4**
1ST FLOOR	126 SF	500	1
2ND FLOOR	412 SF	500	1
BASEMENT	920 SF	500	2
OCCUPANCY ACCESSORY USE (TOILETS, AISLES, ETC)		EXCLUDED	

TOTAL OCCUPANTS **159**

EGRESS WIDTH
REQUIRED: 34" MIN
PROVIDED: 36" X 4 = 144"

MEANS OF EGRESS NOTES

MEANS OF EGRESS
B BUSINESS OCCUPANCY, NON-SPRINKLERED BUILDING

# OF EXITS REQ'D / PROVIDED:	1 / 3	NFPA 101 7.4.1
EXIT SEPARATION DISTANCE:	1/2 DIAGONAL	NFPA 101 7.5.1.3.2
COMMON PATH OF TRAVEL	100 FT	NFPA 101 38.2.5.3.2
MAX. TRAVEL DIST. TO EXIT:	200 FT	NFPA 101 38.2.6.2

GENERAL NOTES

1. COORDINATE PLACEMENT OF EXIT SIGNS AND EMERGENCY FIXTURES W/ ELECTRICAL DRAWINGS

LS LEGEND

1 ONE-HOUR RATED DEMISING PARTITION, UL U-333

2. ONE-HOUR RATED DOOR (SEE DOOR SCHEDULE)

LIFE SAFETY SYMBOL LEGEND

VERIFY LOCATIONS ON DRAWINGS

- POINT OF ORIGIN
- POINT OF SAFETY
- PATH OF TRAVEL
- FIRE EXTINGUISHER, 5 LB. ABC, IN CABINET, LOCATED IAW 75 FT MAX. TRAVEL DIST. RULE, NFPA 10 TABLE 6.2.1.1
- EMERGENCY LIGHT
- WALL MOUNTED COMBO EXIT SIGN

COORDINATE PLACEMENT OF EXIT SIGNS AND EMERGENCY FIXTURES W/ ELECTRICAL DRAWINGS

PLUMBING FIXTURE CALCULATIONS

IPC TABLE 403.1
BASED ON:
B BUSINESS OCCUPANCY
159 OCCUPANTS (80M, 79F)

BUSINESS

WC: MALES & FEMALES: 1 PER 25 FOR FIRST 50
LAV.: MALES & FEMALES 1 PER 40 FOR FIRST 80

WC REQUIRED / PROPOSED
MALE: 3 / 3
FEMALE: 3 / 4

LAV REQUIRED / PROPOSED
MALE: 2 / 3
FEMALE: 2 / 3

NOTE: ALL REQUIRED FIXTURES TO BE PROVIDED IN SINGLE-USER FACILITIES AND SHALL BE IDENTIFIED FOR USE BY EITHER SEX IAW IPC 403.1.2

DRINKING FOUNTAIN REQUIRED / PROVIDED:
1 PER 500

1 / 1 BI-LEVEL DRINKING FOUNTAIN (RR FOYER)

STROUD AND COMPANY
427 8th Street · Macon, Ga 31201
478-743-5097

ALL Architecture, LLC
2052 CHRYSLER DRIVE NE, ATLANTA, GA 30345
TELEPHONE: (404) 316-2896
E-MAIL: INFO@ALLARCHLLC.COM

REVISIONS
NO. DATE

COPYRIGHT
THIS DRAWING AND ALL REPRODUCTIONS ARE COPYRIGHTED AND THE PROPERTY OF ALL ARCHITECTURE, LLC AND MAY NOT BE USED IN ANY WAY WITHOUT THEIR PERMISSION.

PROJECT TITLE:
HAMILTON DENTAL
222 CHAMBLESS LN,
HAMILTON, GA 31811

STATE OF GEORGIA
JUAN CAMILO ARCHILA
CERTIFICATE NO. 10113
REGISTERED ARCHITECT
6-2-23

DRAWN: JLL	CHECKED: JCA
APPROVED: JCA	ISSUE DATE: 08/02/23
CAD FILE NAME: -	

SHEET TITLE:
LIFE SAFETY PLANS

PROJECT NUMBER: 22016

SHEET NO:
A010
SHEET OF

ISSUED FOR CONSTRUCTION

PLOT DATE: 12/11/2018 7:06:32 AM

2 A020 STREET VIEW
1/16" = 1'-0"

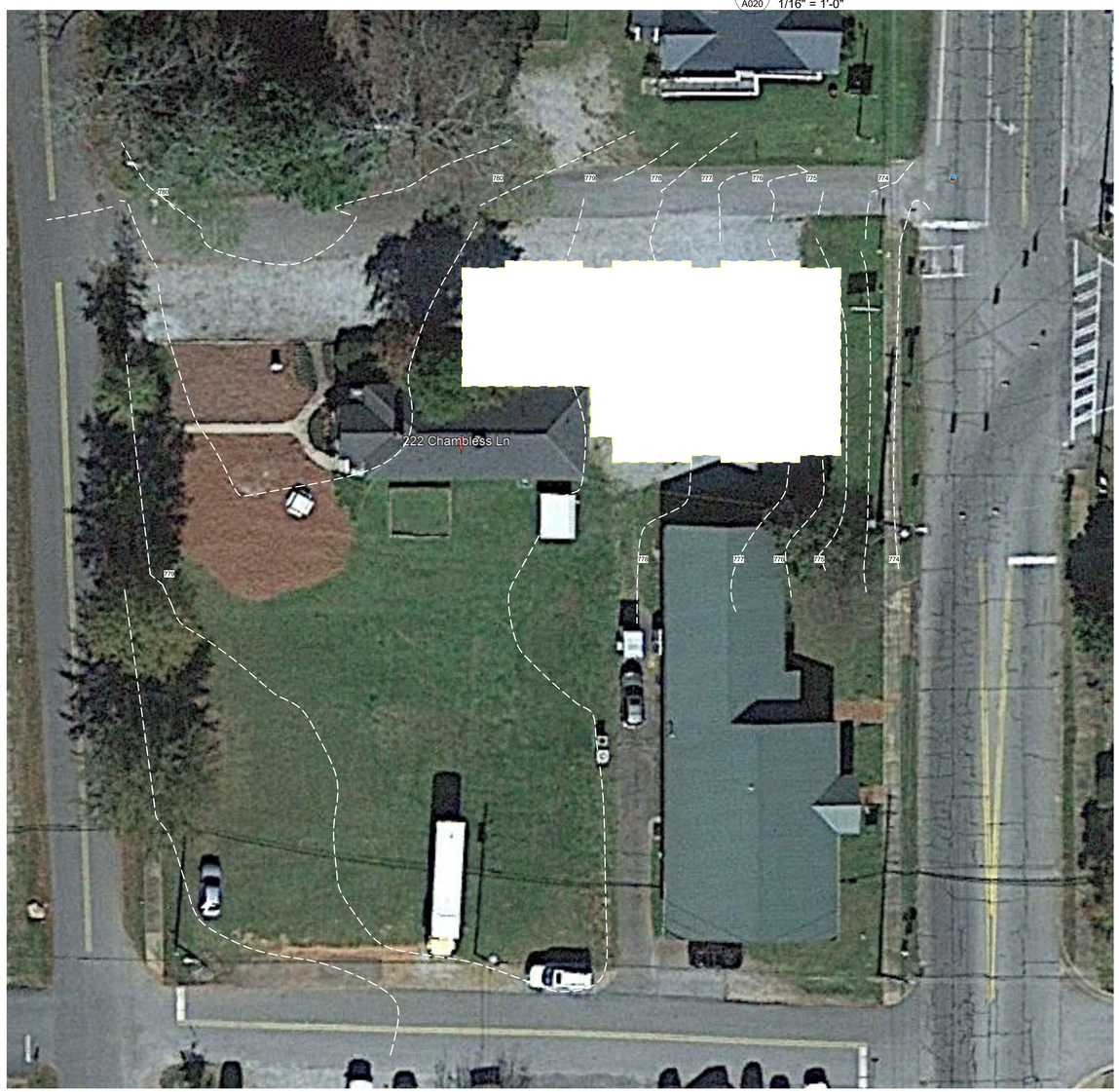

1 A020 EXISTING SITE
1" = 20'-0"

LOCATION

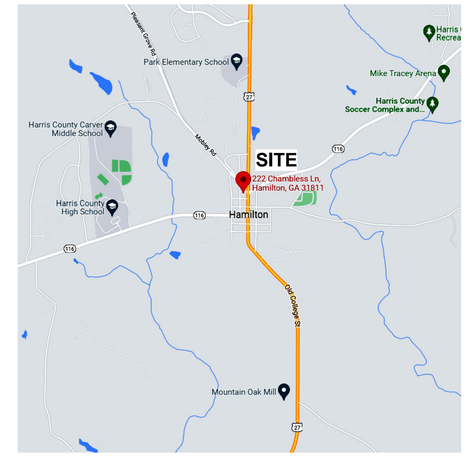

VICINITY MAP
1" = 400'-0"

STROUD AND COMPANY
427 8th Street · Macon, Ga 31201
478-743-5097

ALL Architecture, LLC
2052 CHRYSLER DRIVE NE, ATLANTA, GA 30345
TELEPHONE: (404) 316-2896
E-MAIL: INFO@ALLARCHLLC.COM

REVISIONS	
NO.	DATE

COPYRIGHT
THIS DRAWING AND ALL REPRODUCTIONS ARE COPYRIGHTED AND THE PROPERTY OF ALL ARCHITECTURE, LLC AND MAY NOT BE USED IN ANY WAY WITHOUT THEIR PERMISSION.

PROJECT TITLE:
HAMILTON DENTAL
222 CHAMBLESS LN,
HAMILTON, GA 31811

STATE OF GEORGIA
JUAN CAMILO ARCHILA
CERTIFICATE NO. 12113
REGISTERED ARCHITECT
8-2-23

DRAWN: JLL	CHECKED: JCA
APPROVED: JCA	ISSUE DATE: 08/02/23

CAD FILE NAME:
-

SHEET TITLE:
EXISTING ARCH. SITE PLAN

PROJECT NUMBER:
22016

SHEET NO:
A020

SHEET OF

ISSUED FOR CONSTRUCTION

PLOT DATE: 12/11/2018 7:06:02 AM

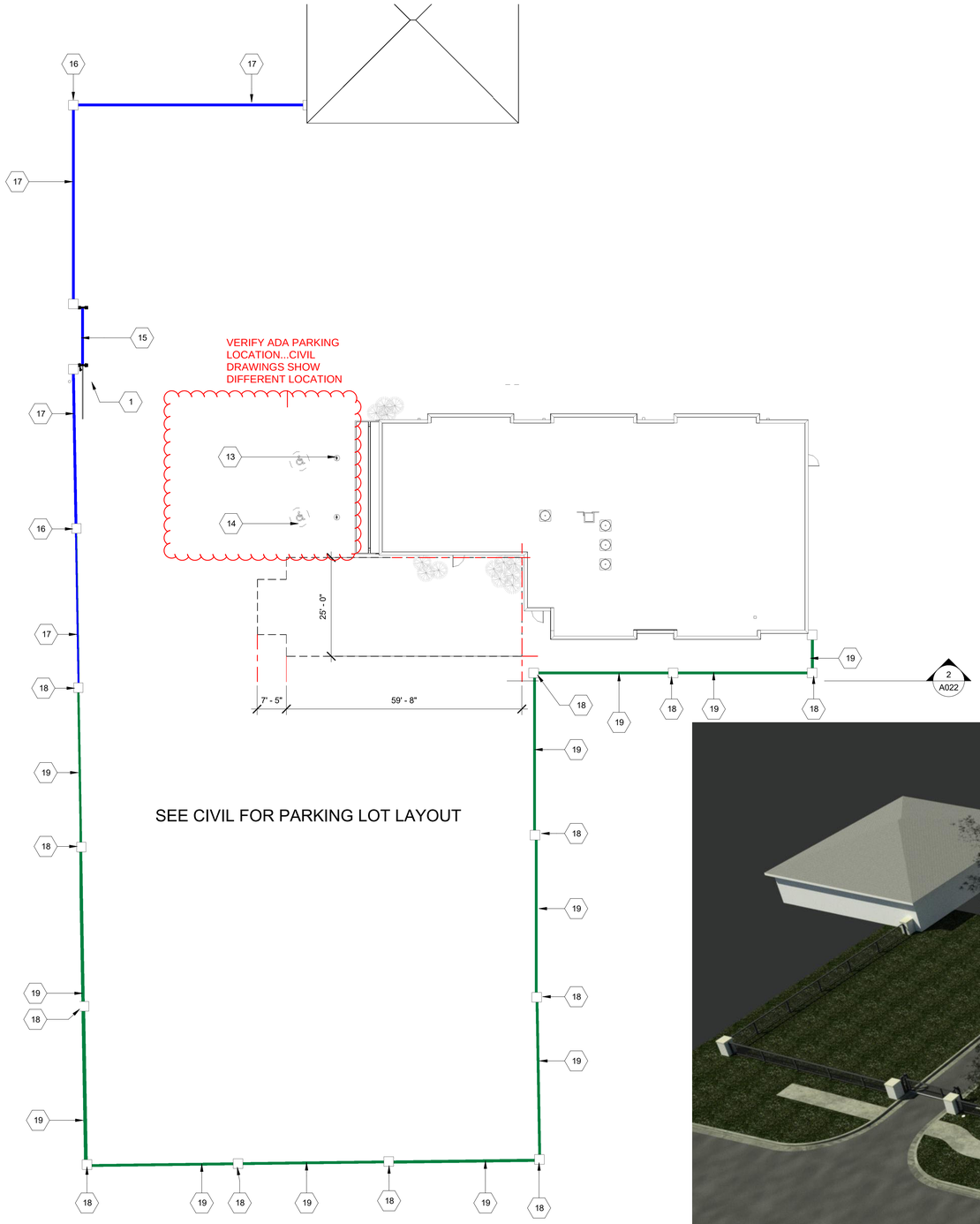

1 A021 ARCHITECTURAL SITE PLAN
1/16" = 1'-0"

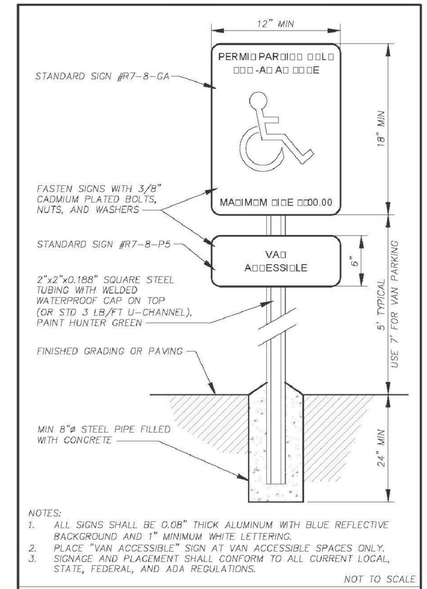

2 A021 PARKING SIGNAGE
1 1/2" = 1'-0"

SITE LEGEND

1	PROPERTY LINE
2	SETBACK LINE
3	ASPHALT PAVING
4	CONCRETE CURB
5	CONCRETE SIDEWALK
6	LANDSCAPING
7	EXISTING TREES
8	PROPOSED TREES - (1) FOR EACH 8 PARKIG SPACES)
9	PARKING SPACE
10	ADA PARKING SPACE
11	ADA RAMP
12	ADA SITE PRINT
13	ADA PARKING SIGNAGE (SEE DETAIL)
14	BLUE
15	OPERABLE GATE
16	24"X24" BRICK FENCE W/ CAST STONE CAP H= 3' - 8"
17	FENCE ELEVATED 6" OFF GROUND 3'-6" TOTAL HEIGHT - EACH PANEL 10' LONG AND 4X4 STEEL POST AT EACH END
18	24"X24" BRICK FENCE W/ CAST STONE CAP H= 5' - 8"
19	FENCE ELEVATED 6" OFF GROUND 3'-6" TOTAL HEIGHT - EACH PANEL 10' LONG AND 4X4 STEEL POST AT EACH END

3 A021 OVERALL SITE VIEW
12" = 1'-0"

STROUD AND COMPANY
427 8th Street - Macon, Ga 31201
478-743-5097

ALL Architecture, LLC
2052 CHRYSLER DRIVE NE, ATLANTA, GA 30345
TELEPHONE: (404) 316-2896
E-MAIL: INFO@ALLARCHLLC.COM

REVISIONS	
NO.	DATE

COPYRIGHT
THIS DRAWING AND ALL REPRODUCTIONS ARE COPYRIGHTED AND THE PROPERTY OF ALL ARCHITECTURE, LLC AND MAY NOT BE USED IN ANY WAY WITHOUT THEIR PERMISSION.

PROJECT TITLE:
HAMILTON DENTAL
222 CHAMBLESS LN,
HAMILTON, GA 31811

STATE OF GEORGIA
JUAN CAMILO ARCHILA
CERTIFICATE NO. 10113
REGISTERED ARCHITECT
8-2-23

DRAWN:	CHECKED:
JLL	JCA
APPROVED:	ISSUE DATE:
JCA	08/02/23

CAD FILE NAME:
-

SHEET TITLE:
PROPOSED ARCH. SITE PLAN

PROJECT NUMBER:
22016

SHEET NO:
A021

SHEET OF

ISSUED FOR CONSTRUCTION

PLOT DATE: 12/11/2018 7:06:32 AM

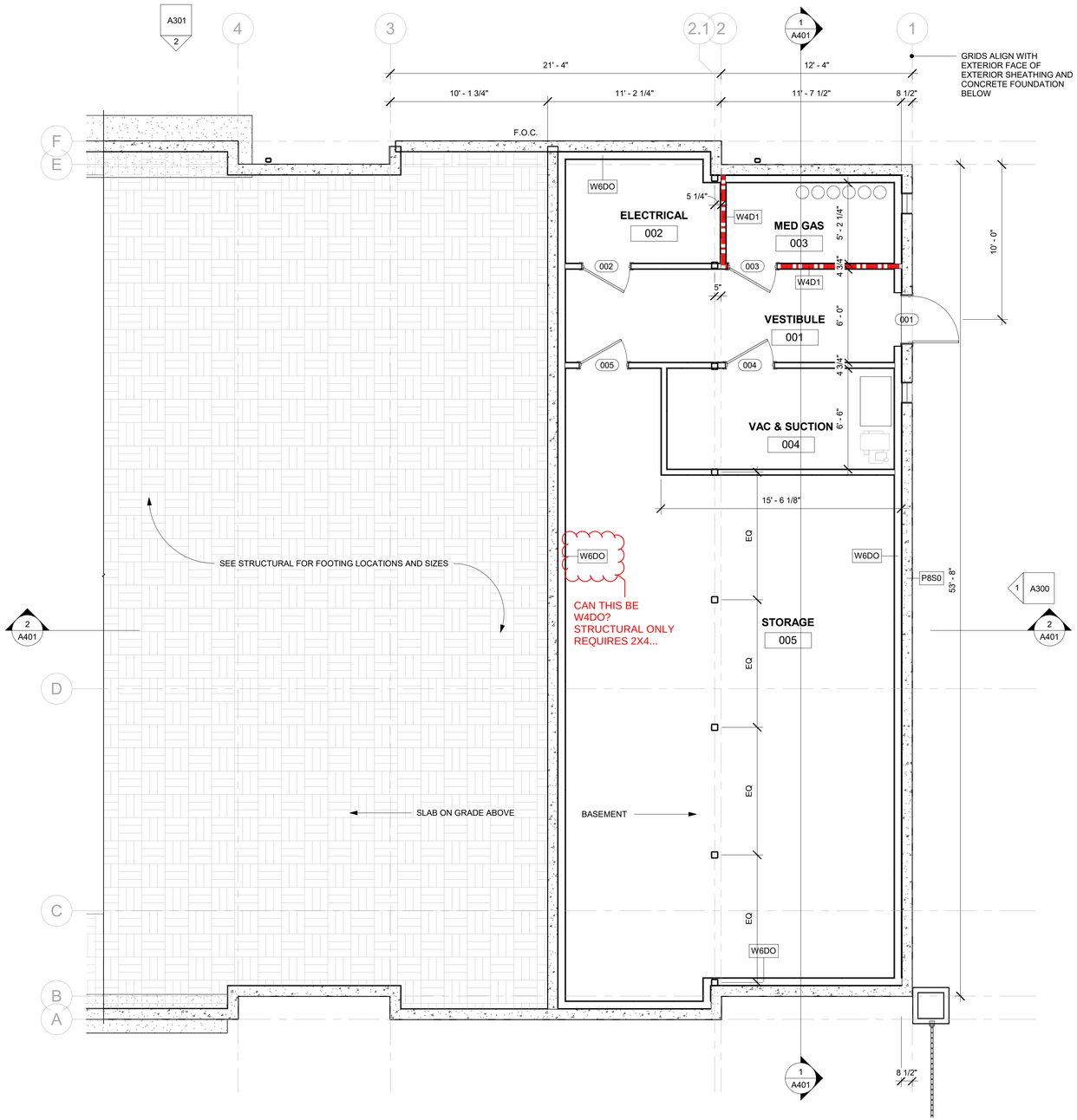

1 A100 BASEMENT FLOOR PLAN
1/4" = 1'-0"

FLOOR PLAN NOTES:

1. SEE SHEET A-002 FOR PARTITION AND WALL TYPES.
2. ALL INTERIOR WALL TYPES SHALL BE W4A0 UNLESS NOTED OTHERWISE OR IS A RATED PARTITION.
3. GRID LINES SHOWN ARE TO EXTERIOR FACE OF STUD AND CONCRETE FOUNDATION UNLESS NOTED OTHERWISE
4. VALANCE LIGHT AT ALL OH CABINETS

FLOOR PLAN KEY NOTES: A

A. CENTER WINDOW IN EXTERIOR WALL

B. ALIGN FACE OF STUD AND FINISH

WALL TYPE SCHEDULE

TYPE	DESCRIPTION	LOCATION
C8E0	8" CMU WALL	INTERIOR
~~E6R0~~	~~CIFS ON WOOD STUDS WITH BRICK PATTERN~~	~~EXTERIOR~~
E6S0	CIFS ON WOOD STUDS WITH SMOOTH FINISH	EXTERIOR
P8S0	CAST IN PLACE WALL WITH FINISH AS SCHEDULED	EXTERIOR
W4A0	WOOD STUD PARTITION WITH GYPSUM BOTH SIDES	INTERIOR
W4D1	WOOD STUD PARTITION RATED ONE HOUR	<varies>
W6DO	6" WOOD STUD WITH GYPSUM ONE SIDE ONLY	<varies>

N/A

STROUD AND COMPANY
427 8th Street · Macon, Ga 31201
478-743-5097

ALL Architecture, LLC
2052 CHRYSLER DRIVE NE, ATLANTA, GA 30345
TELEPHONE: (404) 316-2896
E-MAIL: INFO@ALLARCHLLC.COM

REVISIONS

NO.	DATE

COPYRIGHT
THIS DRAWING AND ALL REPRODUCTIONS ARE COPYRIGHTED AND THE PROPERTY OF ALL ARCHITECTURE, LLC AND MAY NOT BE USED IN ANY WAY WITHOUT THEIR PERMISSION.

PROJECT TITLE:
HAMILTON DENTAL
222 CHAMBLESS LN,
HAMILTON, GA 31811

STATE OF GEORGIA
JUAN CAMILO ARCHILA
CERTIFICATE NO. 12113
REGISTERED ARCHITECT
8-2-23

DRAWN: JLL	CHECKED: JCA
APPROVED: JCA	ISSUE DATE: 08/02/23

CAD FILE NAME: -

SHEET TITLE:
BASEMENT FLOOR PLAN

PROJECT NUMBER: 22016

SHEET NO:
A100

SHEET OF

ISSUED FOR CONSTRUCTION

PLOT DATE: 12/11/2018 7:06:02 AM

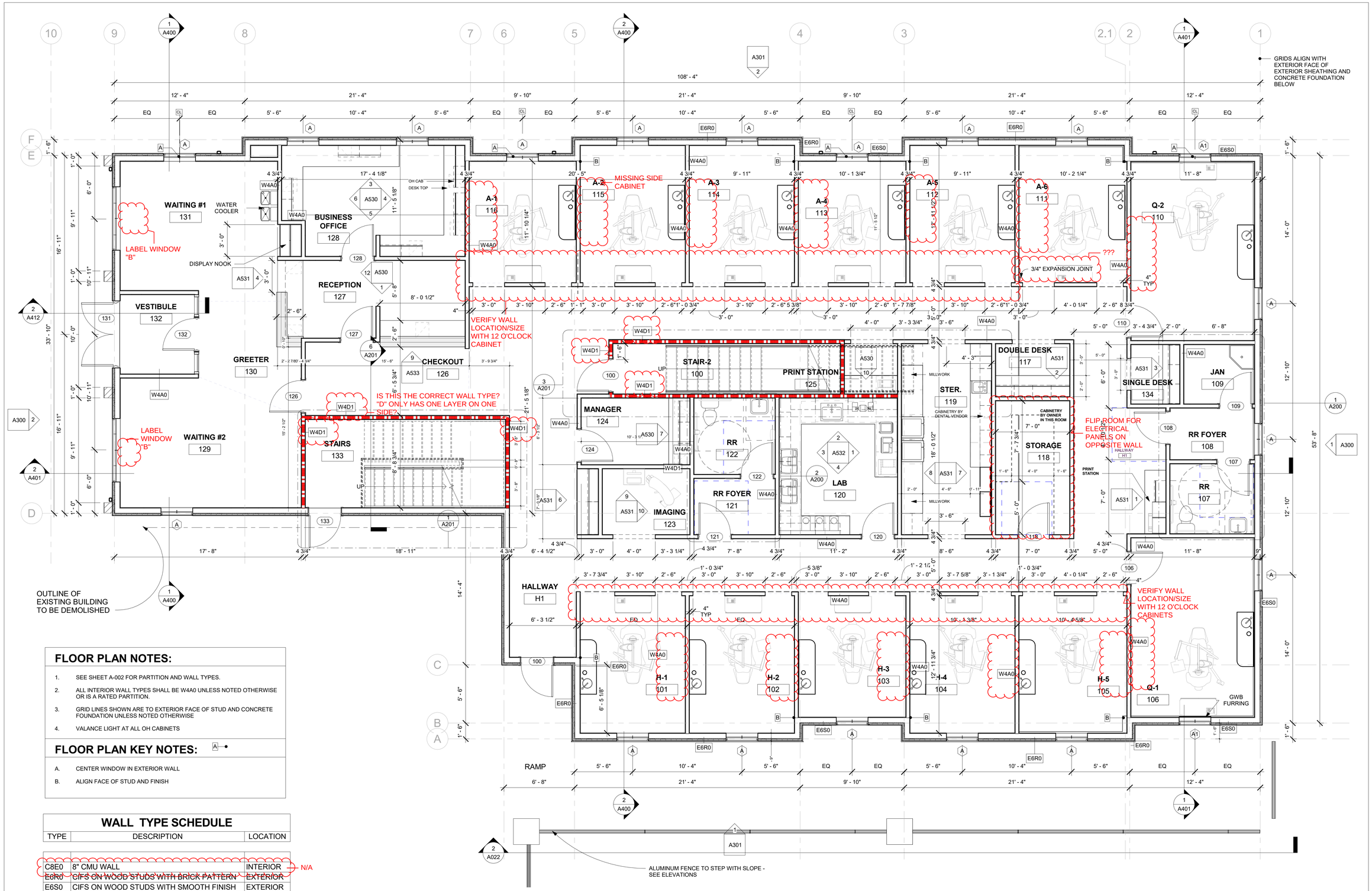

1 A101 1ST FLOOR PLAN
1/4" = 1'-0"

FLOOR PLAN NOTES:

1. SEE SHEET A-002 FOR PARTITION AND WALL TYPES.
2. ALL INTERIOR WALL TYPES SHALL BE W4A0 UNLESS NOTED OTHERWISE OR IS A RATED PARTITION.
3. GRID LINES SHOWN ARE TO EXTERIOR FACE OF STUD AND CONCRETE FOUNDATION UNLESS NOTED OTHERWISE
4. VALANCE LIGHT AT ALL OH CABINETS

FLOOR PLAN KEY NOTES:

A. CENTER WINDOW IN EXTERIOR WALL

B. ALIGN FACE OF STUD AND FINISH

WALL TYPE SCHEDULE

TYPE	DESCRIPTION	LOCATION
C8E0	8" CMU WALL	INTERIOR
~~E6R0~~	~~CIFS ON WOOD STUDS WITH BRICK PATTERN~~	~~EXTERIOR~~
E6S0	CIFS ON WOOD STUDS WITH SMOOTH FINISH	EXTERIOR
P8S0	CAST IN PLACE WALL WITH FINISH AS SCHEDULED	EXTERIOR
W4A0	WOOD STUD PARTITION WITH GYPSUM BOTH SIDES	INTERIOR
W4D1	WOOD STUD PARTITION RATED ONE HOUR	<varies>
W6DO	6" WOOD STUD WITH GYPSUM ONE SIDE ONLY	<varies>

N/A

PLOT DATE: 12/11/2018 7:06:02 AM

STROUD AND COMPANY
427 8th Street · Macon, Ga 31201
478-743-5097

ALL Architecture, LLC
2052 CHRYSLER DRIVE NE, ATLANTA, GA 30345
TELEPHONE: (404) 316-2896
E-MAIL: INFO@ALLARCHLLC.COM

REVISIONS

NO.	DATE

COPYRIGHT
THIS DRAWING AND ALL REPRODUCTIONS ARE COPYRIGHTED AND THE PROPERTY OF ALL ARCHITECTURE, LLC AND MAY NOT BE USED IN ANY WAY WITHOUT THEIR PERMISSION.

PROJECT TITLE:
HAMILTON DENTAL
222 CHAMBLESS LN,
HAMILTON, GA 31811

STATE OF GEORGIA
JUAN CAMILO ARCHILA
CERTIFICATE NO. 12113
8-2-23
REGISTERED ARCHITECT

DRAWN: JLL	CHECKED: JCA
APPROVED: JCA	ISSUE DATE: 08/02/23

CAD FILE NAME: -

SHEET TITLE:
1ST FLOOR PLAN

PROJECT NUMBER: 22016

SHEET NO:
A101

SHEET OF

ISSUED FOR CONSTRUCTION

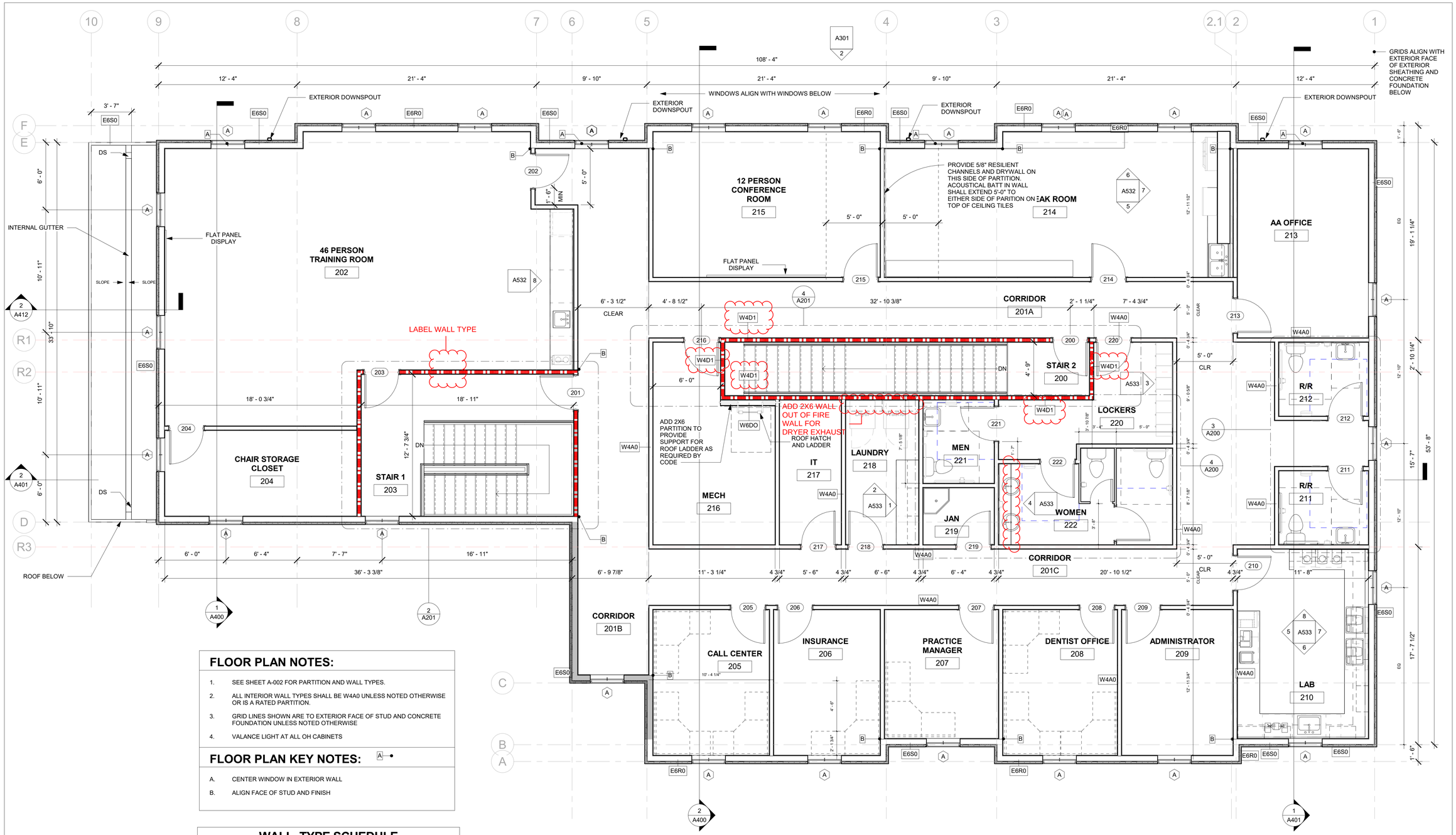

1 A102 2ND FLOOR PLAN
1/4" = 1'-0"

FLOOR PLAN NOTES:

1. SEE SHEET A-002 FOR PARTITION AND WALL TYPES.
2. ALL INTERIOR WALL TYPES SHALL BE W4A0 UNLESS NOTED OTHERWISE OR IS A RATED PARTITION.
3. GRID LINES SHOWN ARE TO EXTERIOR FACE OF STUD AND CONCRETE FOUNDATION UNLESS NOTED OTHERWISE
4. VALANCE LIGHT AT ALL OH CABINETS

FLOOR PLAN KEY NOTES:

A. CENTER WINDOW IN EXTERIOR WALL

B. ALIGN FACE OF STUD AND FINISH

WALL TYPE SCHEDULE

TYPE	DESCRIPTION	LOCATION
C8E0	8" CMU WALL	INTERIOR
~~E8R0~~	~~CIFS ON WOOD STUDS WITH BRICK PATTERN~~	~~EXTERIOR~~
E6S0	CIFS ON WOOD STUDS WITH SMOOTH FINISH	EXTERIOR
P8S0	CAST IN PLACE WALL WITH FINISH AS SCHEDULED	EXTERIOR
W4A0	WOOD STUD PARTITION WITH GYPSUM BOTH SIDES	INTERIOR
W4D1	WOOD STUD PARTITION RATED ONE HOUR	<varies>
W6DO	6" WOOD STUD WITH GYPSUM ONE SIDE ONLY	<varies>

N/A

PLOT DATE: 12/11/2018 7:06:02 AM

STROUD AND COMPANY
427 8th Street · Macon, Ga 31201
478-743-5097

ALL Architecture, LLC
2052 CHRYSLER DRIVE NE, ATLANTA, GA 30345
TELEPHONE: (404) 316-2896
E-MAIL: INFO@ALLARCHLLC.COM

REVISIONS

NO.	DATE

COPYRIGHT
THIS DRAWING AND ALL REPRODUCTIONS ARE COPYRIGHTED AND THE PROPERTY OF ALL ARCHITECTURE, LLC AND MAY NOT BE USED IN ANY WAY WITHOUT THEIR PERMISSION.

PROJECT TITLE:
HAMILTON DENTAL
222 CHAMBLESS LN,
HAMILTON, GA 31811

STATE OF GEORGIA · JUAN CAMILO ARCHILA · CERTIFICATE NO. 12113 · REGISTERED ARCHITECT
8-2-23

DRAWN: JLL	CHECKED: JCA
APPROVED: JCA	ISSUE DATE: 08/02/23

CAD FILE NAME: -

SHEET TITLE:
2ND FLOOR PLAN

PROJECT NUMBER: 22016

SHEET NO:
A102

SHEET OF

ISSUED FOR CONSTRUCTION

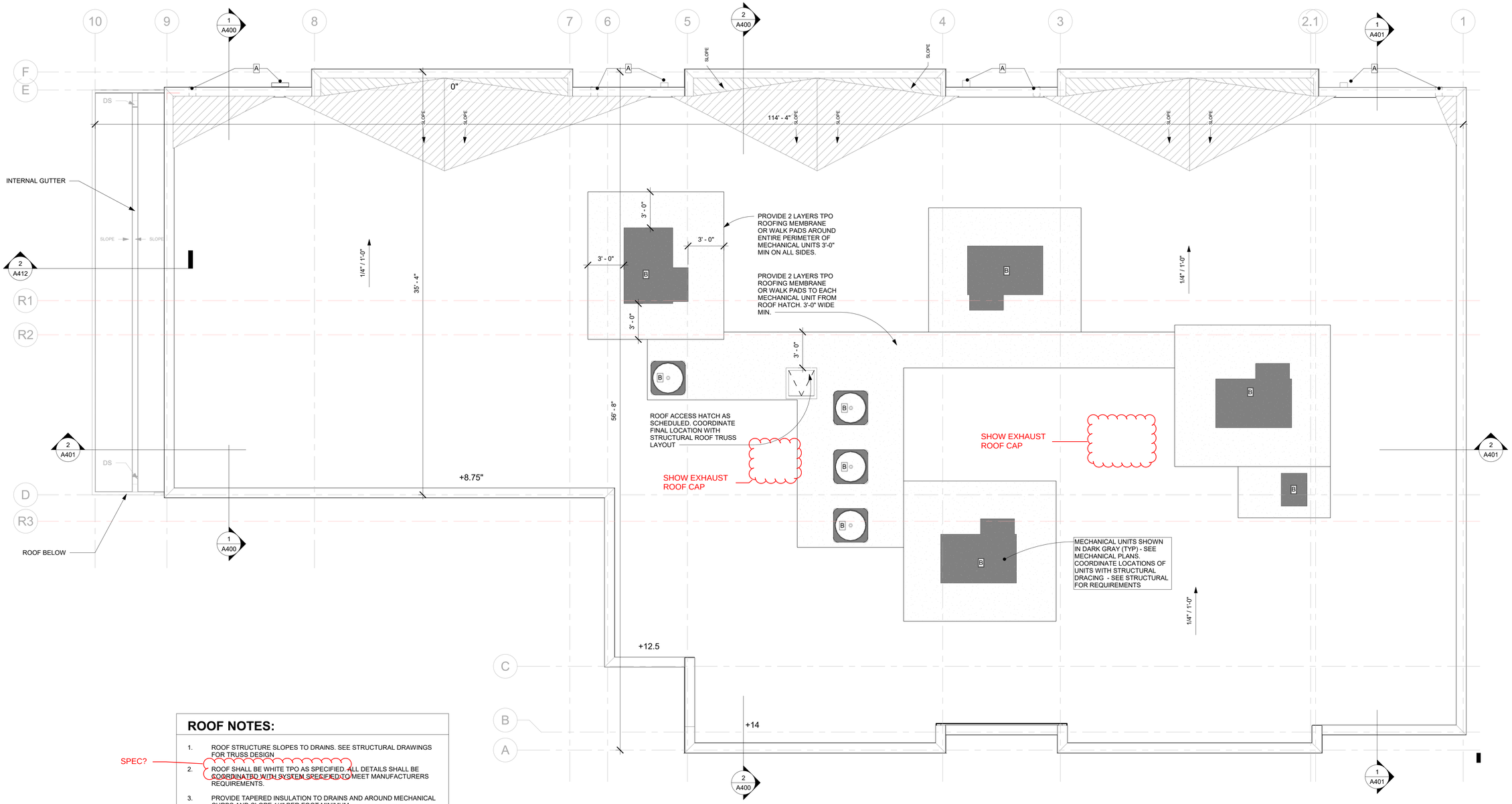

1 A103 ROOF PLAN
1/4" = 1'-0"

ROOF NOTES:

1. ROOF STRUCTURE SLOPES TO DRAINS. SEE STRUCTURAL DRAWINGS FOR TRUSS DESIGN.
2. ROOF SHALL BE WHITE TPO AS SPECIFIED. ALL DETAILS SHALL BE COORDINATED WITH SYSTEM SPECIFIED TO MEET MANUFACTURERS REQUIREMENTS.
3. PROVIDE TAPERED INSULATION TO DRAINS AND AROUND MECHANICAL CURBS AND SLOPE 1/4" PER FOOT MINIMUM.
4. ALIGN TOP OF CONDUCTOR HEAD WITH TOP OF OVERFLOW SCUPPER. BOTTOM OF OVERFLOW SCUPPER SHALL BE 1" ABOVE THE TOP OF ROOF.
5. ROOFING DETAILS NOT PROVIDED SPECIFICALLY BY ARCHITECT SHALL BE PER THE NRCA OR SMACNA DETAILS BASED ON THE TYPE OF ROOFING SYSTEM INDICATED. PROVIDE DETAILS TO ARCHITECT FOR REVIEW WITH ROOFING SUBMITTAL.
6. ROOFS WITH A SLOPE OF OR LESS THAN 2:12 SHALL HAVE A SOLAR REFLECTANCE OF 0.70 AND A MINIMUM THERMAL EMITTANCE OF 0.75, TYPICAL.

SPEC?

ROOF KEY NOTES:

A

A. ALIGN TOP OF CONDUCTOR HEAD WITH TOP OF OVERFLOW SCUPPER. BOTTOM OF OVERFLOW SCUPPER SHALL BE 1" ABOVE THE TOP OF ROOF

B. MECHANICAL UNITS SHOWN IN DARK GRAY (TYP) - SEE MECHANICAL PLANS. COORDINATE LOCATIONS OF UNITS WITH STRUCTURAL DRACING - SEE STRUCTURAL FOR REQUIREMENTS

STROUD AND COMPANY
427 8th Street · Macon, Ga 31201
478-743-5097

ALL Architecture, LLC
2052 CHRYSLER DRIVE NE, ATLANTA, GA 30345
TELEPHONE: (404) 316-2896
E-MAIL: INFO@ALLARCHLLC.COM

REVISIONS

NO.	DATE

COPYRIGHT:
THIS DRAWING AND ALL REPRODUCTIONS ARE COPYRIGHTED AND THE PROPERTY OF ALL ARCHITECTURE, LLC AND MAY NOT BE USED IN ANY WAY WITHOUT THEIR PERMISSION.

PROJECT TITLE:
HAMILTON DENTAL
222 CHAMBLESS LN,
HAMILTON, GA 31811

STATE OF GEORGIA
JUAN CAMILO ARCHILA
6-2-23
CERTIFICATE NO. 12319
REGISTERED ARCHITECT

DRAWN: JLL	CHECKED: JCA
APPROVED: JCA	ISSUE DATE: 08/02/23

CAD FILE NAME: -

SHEET TITLE:
ROOF PLAN

PROJECT NUMBER: 22016

SHEET NO:
A103

SHEET OF

ISSUED FOR CONSTRUCTION

PLOT DATE: 12/11/2018 7:06:02 AM

RCP LEGEND AND NOTES

CEILING SYMBOLS / TAGS

- 10' - 0" — HEIGHT OF CEILING OFF F.F.E. SHOWN; CEILING TAG SYMBOL
- CEILING ALIGNMENT SYMBOL — INDICATING INTERSECTION OF A CEILINGS GRID & ITS ALIGNMENT TO THE CORNER OF THE OBJECT HIGHLIGHTED, G.C. TO COORD. TYP.
- 0' - 0" — CEILING & OR HEADER ELEVATION; SPOT ELEVATION SYMBOL

CEILING TYPES

- 2' x 2' ACOUSTICAL CEILING TILE, SEE FINISH SCHEDULE
- 2' x 4' ACOUSTICAL CEILING TILE, SEE FINISH SCHEDULE
- PAINTED GYPSUM BOARD, SEE FINISH SCHEDULE
- STRUCT — EXPOSED STRUCTURE PAINTED & OR UNPAINTED, SEE FINISH SCHEDULE
- PAINTED EIFS & OR STUCCO, SEE FINISH SCHEDULE

MECHANICAL FIXTURES

- HVAC SUPPLY GRILLES, SEE MECHANICAL DRAWINGS FOR ADDITIONAL INFORMATION
- HVAC RETURN GRILLES, SEE MECHANICAL DRAWINGS FOR ADDITIONAL INFORMATION
- ACCESS PANEL DOOR, PAINT TO MATCH ADJACENT CEILING FINISH, U.N.O.

ELECTRICAL FIXTURES - SEE ELECTRICAL DRAWINGS

- SURFACE MOUNTED LIGHT
- RECESSED LIGHT FIXTURE
- WALL-MOUNTED COMBO EXIT SIGN
- EMERGENCY LIGHT W/ BATTERY
- EXTERIOR WALL PACK
- 2' x 2' LIGHT FIXTURE
- 2' x 2' LIGHT FIXTURE W/ BATTERY, SEE ELECTRICAL DRAWINGS FOR EXACT FIXTURE TYPE AND LOCATIONS
- 2' x 4' LIGHT FIXTURE
- 2' x 4' LIGHT FIXTURE W/ BATTERY, SEE ELECTRICAL DRAWINGS FOR EXACT FIXTURE TYPE AND LOCATIONS
- LINEAR STRIP LIGHT FIXTURE, SEE ELECTRICAL FOR EXACT FIXTURE TYPE
- LINEAR STRIP LIGHT FIXTURE W/ BATTERY, SEE ELECTRICAL FOR EXACT FIXTURE TYPE

GENERAL NOTES

THE G.C. IS TO COORDINATE ALL WORK OF ALL SUB CONTRACTORS & ENSURE THAT NO CONFLICTS OCCUR BETWEEN THE TRADES. THIS INCLUDES, BUT IS NOT LIMITED TO ELECTRICAL, MECHANICAL, PLUMBING, & FIRE.

THE G.C. IS TO COORDINATE WITH THE OWNERS VENDORS AND ENSURE THAT NO CONFLICTS OCCUR BETWEEN THEIR ITEMS AND THE ITEMS MENTIONED ABOVE. PARTICULAR ATTENTION IS TO BE PAID TO THE COORDINATION OF THE FIRE & SHOP EQUIPMENT VENDOR.

NO CONSIDERATION WILL BE GRANTED FOR CHANGES RESULTING FROM FAILURE TO COORDINATE BETWEEN THE SUB CONTRACTORS AND THE OWNERS VENDORS

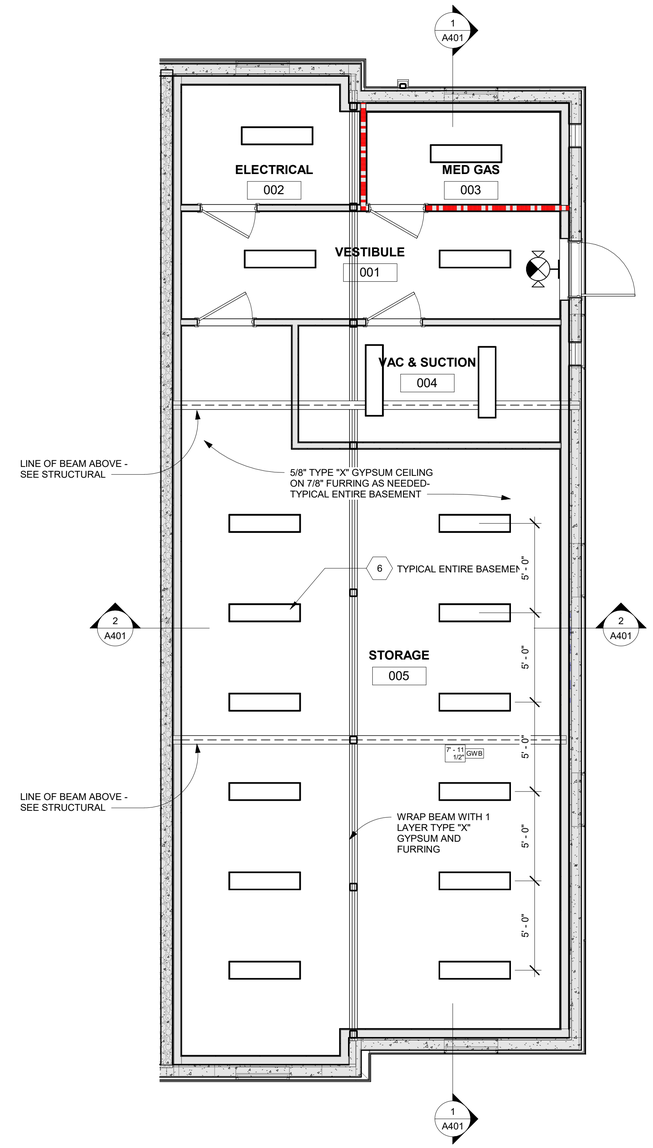

1 A110 BASEMENT REFLECTED CEILING PLAN
1/4" = 1'-0"

STROUD AND COMPANY
427 8th Street · Macon, Ga 31201
478-743-5097

ALL Architecture, LLC
2052 CHRYSLER DRIVE NE, ATLANTA, GA 30345
TELEPHONE: (404) 316-2896
E-MAIL: INFO@ALLARCHLLC.COM

REVISIONS

NO.	DATE

COPYRIGHT
THIS DRAWING AND ALL REPRODUCTIONS ARE COPYRIGHTED AND THE PROPERTY OF ALL ARCHITECTURE, LLC AND MAY NOT BE USED IN ANY WAY WITHOUT THEIR PERMISSION.

PROJECT TITLE:
HAMILTON DENTAL
222 CHAMBLESS LN,
HAMILTON, GA 31811

STATE OF GEORGIA — JUAN CAMILO ARCHILA — CERTIFICATE NO. 12113 — REGISTERED ARCHITECT — 8-2-23

DRAWN: JLL	CHECKED: JCA
APPROVED: JCA	ISSUE DATE: 08/02/23

CAD FILE NAME: -

SHEET TITLE:
BASEMENT REFL. CLG PLAN

PROJECT NUMBER: 22016

SHEET NO:
A110

SHEET OF

ISSUED FOR CONSTRUCTION

PLOT DATE: 12/11/2018 7:06:02 AM

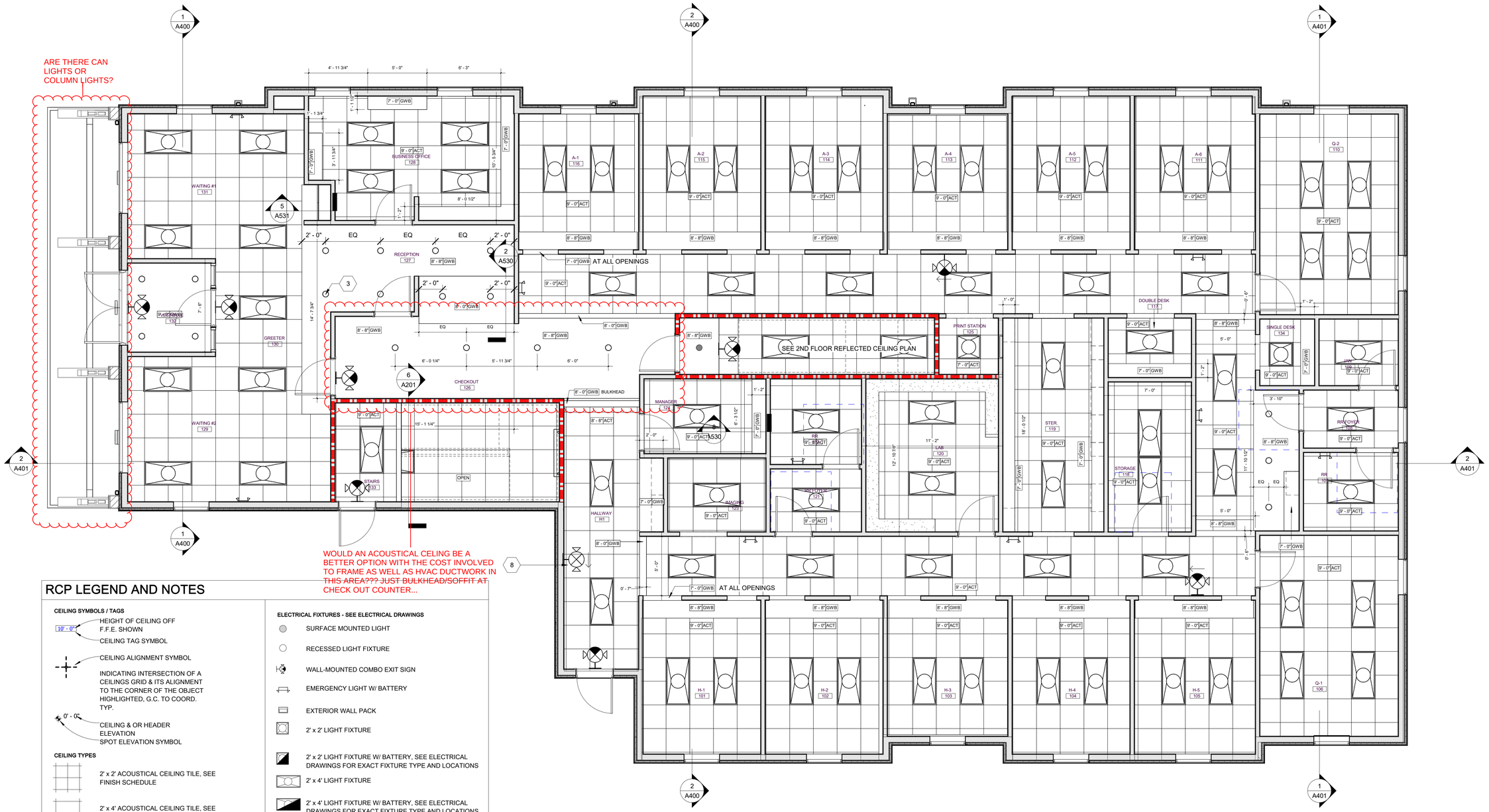

1 A111 1ST FLOOR REFLECTED CEILING PLAN
1/4" = 1'-0"

RCP LEGEND AND NOTES

CEILING SYMBOLS / TAGS

- 10' - 0" — HEIGHT OF CEILING OFF F.F.E. SHOWN; CEILING TAG SYMBOL
- CEILING ALIGNMENT SYMBOL — INDICATING INTERSECTION OF A CEILINGS GRID & ITS ALIGNMENT TO THE CORNER OF THE OBJECT HIGHLIGHTED, G.C. TO COORD. TYP.
- 0' - 0" — CEILING & OR HEADER ELEVATION; SPOT ELEVATION SYMBOL

CEILING TYPES

- 2' x 2' ACOUSTICAL CEILING TILE, SEE FINISH SCHEDULE
- 2' x 4' ACOUSTICAL CEILING TILE, SEE FINISH SCHEDULE
- PAINTED GYPSUM BOARD, SEE FINISH SCHEDULE
- STRUCT — EXPOSED STRUCTURE PAINTED & OR UNPAINTED, SEE FINISH SCHEDULE
- PAINTED EIFS & OR STUCCO, SEE FINISH SCHEDULE

MECHANICAL FIXTURES

- HVAC SUPPLY GRILLES, SEE MECHANICAL DRAWINGS FOR ADDITIONAL INFORMATION
- HVAC RETURN GRILLES, SEE MECHANICAL DRAWINGS FOR ADDITIONAL INFORMATION
- ACCESS PANEL DOOR, PAINT TO MATCH ADJACENT CEILING FINISH, U.N.O.

ELECTRICAL FIXTURES - SEE ELECTRICAL DRAWINGS

- SURFACE MOUNTED LIGHT
- RECESSED LIGHT FIXTURE
- WALL-MOUNTED COMBO EXIT SIGN
- EMERGENCY LIGHT W/ BATTERY
- EXTERIOR WALL PACK
- 2' x 2' LIGHT FIXTURE
- 2' x 2' LIGHT FIXTURE W/ BATTERY, SEE ELECTRICAL DRAWINGS FOR EXACT FIXTURE TYPE AND LOCATIONS
- 2' x 4' LIGHT FIXTURE
- 2' x 4' LIGHT FIXTURE W/ BATTERY, SEE ELECTRICAL DRAWINGS FOR EXACT FIXTURE TYPE AND LOCATIONS
- LINEAR STRIP LIGHT FIXTURE, SEE ELECTRICAL FOR EXACT FIXTURE TYPE
- LINEAR STRIP LIGHT FIXTURE W/ BATTERY, SEE ELECTRICAL FOR EXACT FIXTURE TYPE

GENERAL NOTES

THE G.C. IS TO COORDINATE ALL WORK OF ALL SUB CONTRACTORS & ENSURE THAT NO CONFLICTS OCCUR BETWEEN THE TRADES. THIS INCLUDES, BUT IS NOT LIMITED TO ELECTRICAL, MECHANICAL, PLUMBING, & FIRE.

THE G.C. IS TO COORDINATE WITH THE OWNERS VENDORS AND ENSURE THAT NO CONFLICTS OCCUR BETWEEN THEIR ITEMS AND THE ITEMS MENTIONED ABOVE. PARTICULAR ATTENTION IS TO BE PAID TO THE COORDINATION OF THE FIRE & SHOP EQUIPMENT VENDOR.

NO CONSIDERATION WILL BE GRANTED FOR CHANGES RESULTING FROM FAILURE TO COORDINATE BETWEEN THE SUB CONTRACTORS AND THE OWNERS VENDORS

INTERIOR FINISH NOTES:

1. ALL OPENINGS INTO ROOMS SHALL BE FRAMED AT 7'-0" AFF.
2. PROVIDE SOFFIT AT OVERHEAD WALL CABINETS. SEE INTERIOR ELEVATIONS FOR ADDITIONAL INFORMATION.

STROUD AND COMPANY
427 8th Street · Macon, Ga 31201
478-743-5097

ALL Architecture, LLC
2052 CHRYSLER DRIVE NE, ATLANTA, GA 30345
TELEPHONE: (404) 316-2896
E-MAIL: INFO@ALLARCHLLC.COM

REVISIONS	
NO.	DATE

COPYRIGHT
THIS DRAWING AND ALL REPRODUCTIONS ARE COPYRIGHTED AND THE PROPERTY OF ALL ARCHITECTURE, LLC AND MAY NOT BE USED IN ANY WAY WITHOUT THEIR PERMISSION.

PROJECT TITLE:
HAMILTON DENTAL
222 CHAMBLESS LN,
HAMILTON, GA 31811

STATE OF GEORGIA — JUAN CAMILO ARCHILA — CERTIFICATE NO. 12113 — 8-2-23 — REGISTERED ARCHITECT

DRAWN: JLL	CHECKED: JCA
APPROVED: JCA	ISSUE DATE: 08/02/23

CAD FILE NAME: -

SHEET TITLE:
1ST FLOOR REFL. CLG PLAN

PROJECT NUMBER: 22016

SHEET NO:
A111
SHEET OF

ISSUED FOR CONSTRUCTION

PLOT DATE: 12/11/2018 7:06:02 AM

2ND FLOOR REFLECTED CEILING PLAN
1/4" = 1'-0"

RCP LEGEND AND NOTES

CEILING SYMBOLS / TAGS

- 10' - 0" — HEIGHT OF CEILING OFF F.F.E. SHOWN
- CEILING TAG SYMBOL
- CEILING ALIGNMENT SYMBOL — INDICATING INTERSECTION OF A CEILINGS GRID & ITS ALIGNMENT TO THE CORNER OF THE OBJECT HIGHLIGHTED, G.C. TO COORD. TYP.
- 0' - 0" — CEILING & OR HEADER ELEVATION SPOT ELEVATION SYMBOL

CEILING TYPES

- 2' x 2' ACOUSTICAL CEILING TILE, SEE FINISH SCHEDULE
- 2' x 4' ACOUSTICAL CEILING TILE, SEE FINISH SCHEDULE
- PAINTED GYPSUM BOARD, SEE FINISH SCHEDULE
- STRUCT — EXPOSED STRUCTURE PAINTED & OR UNPAINTED, SEE FINISH SCHEDULE
- PAINTED EIFS & OR STUCCO, SEE FINISH SCHEDULE

MECHANICAL FIXTURES

- HVAC SUPPLY GRILLES, SEE MECHANICAL DRAWINGS FOR ADDITIONAL INFORMATION
- HVAC RETURN GRILLES, SEE MECHANICAL DRAWINGS FOR ADDITIONAL INFORMATION
- ACCESS PANEL DOOR, PAINT TO MATCH ADJACENT CEILING FINISH, U.N.O.

ELECTRICAL FIXTURES - SEE ELECTRICAL DRAWINGS

- SURFACE MOUNTED LIGHT
- RECESSED LIGHT FIXTURE
- WALL-MOUNTED COMBO EXIT SIGN
- EMERGENCY LIGHT W/ BATTERY
- EXTERIOR WALL PACK
- 2' x 2' LIGHT FIXTURE
- 2' x 2' LIGHT FIXTURE W/ BATTERY, SEE ELECTRICAL DRAWINGS FOR EXACT FIXTURE TYPE AND LOCATIONS
- 2' x 4' LIGHT FIXTURE
- 2' x 4' LIGHT FIXTURE W/ BATTERY, SEE ELECTRICAL DRAWINGS FOR EXACT FIXTURE TYPE AND LOCATIONS
- LINEAR STRIP LIGHT FIXTURE, SEE ELECTRICAL FOR EXACT FIXTURE TYPE
- LINEAR STRIP LIGHT FIXTURE W/ BATTERY, SEE ELECTRICAL FOR EXACT FIXTURE TYPE

GENERAL NOTES

THE G.C. IS TO COORDINATE ALL WORK OF ALL SUB CONTRACTORS & ENSURE THAT NO CONFLICTS OCCUR BETWEEN THE TRADES. THIS INCLUDES, BUT IS NOT LIMITED TO ELECTRICAL, MECHANICAL, PLUMBING, & FIRE.

THE G.C. IS TO COORDINATE WITH THE OWNERS VENDORS AND ENSURE THAT NO CONFLICTS OCCUR BETWEEN THEIR ITEMS AND THE ITEMS MENTIONED ABOVE. PARTICULAR ATTENTION IS TO BE PAID TO THE COORDINATION OF THE FIRE & SHOP EQUIPMENT VENDOR.

NO CONSIDERATION WILL BE GRANTED FOR CHANGES RESULTING FROM FAILURE TO COORDINATE BETWEEN THE SUB CONTRACTORS AND THE OWNERS VENDORS

STROUD AND COMPANY
427 8th Street · Macon, Ga 31201
478-743-5097

ALL Architecture, LLC
2052 CHRYSLER DRIVE NE, ATLANTA, GA 30345
TELEPHONE: (404) 316-2896
E-MAIL: INFO@ALLARCHLLC.COM

REVISIONS	
NO.	DATE

COPYRIGHT:
THIS DRAWING AND ALL REPRODUCTIONS ARE COPYRIGHTED AND THE PROPERTY OF ALL ARCHITECTURE, LLC AND MAY NOT BE USED IN ANY WAY WITHOUT THEIR PERMISSION.

PROJECT TITLE:
HAMILTON DENTAL
222 CHAMBLESS LN,
HAMILTON, GA 31811

STATE OF GEORGIA
JUAN CAMILO ARCHILA
6-2-23
CERTIFICATE NO. 12119
REGISTERED ARCHITECT

DRAWN: JLL	CHECKED: JCA
APPROVED: JCA	ISSUE DATE: 08/02/23

CAD FILE NAME: -

SHEET TITLE:
2ND FLOOR REFL. CLG PLAN

PROJECT NUMBER: 22016

SHEET NO:
A112

SHEET OF

ISSUED FOR CONSTRUCTION

PLOT DATE: 12/11/2018 7:06:02 AM

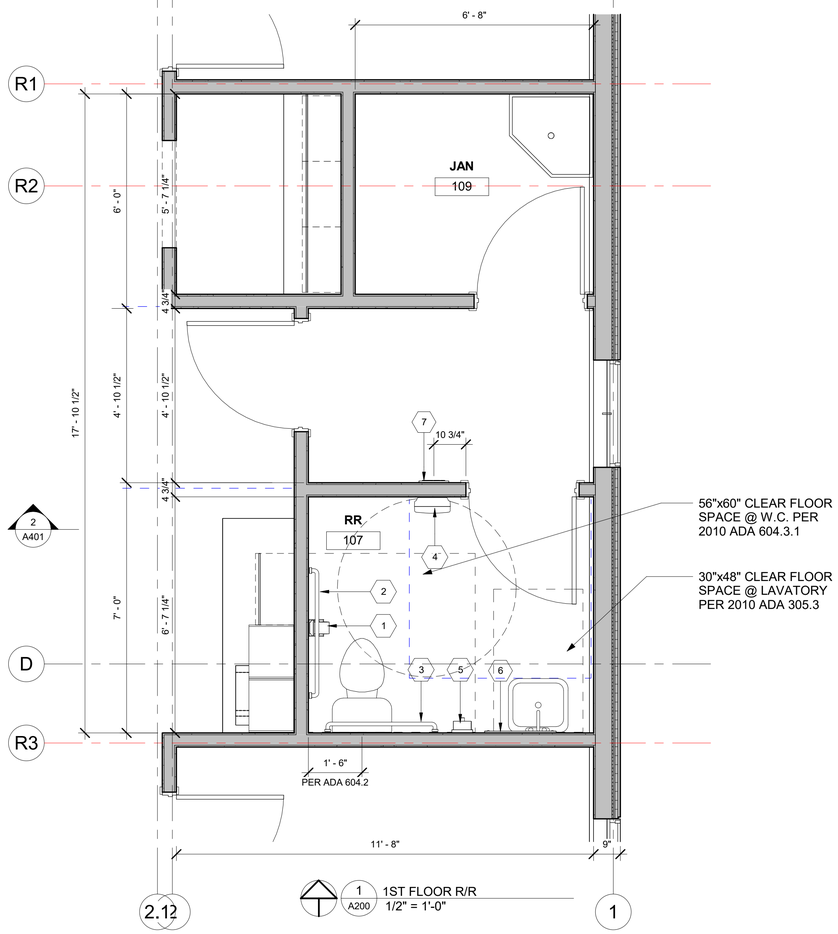

1 A200 1ST FLOOR R/R
1/2" = 1'-0"

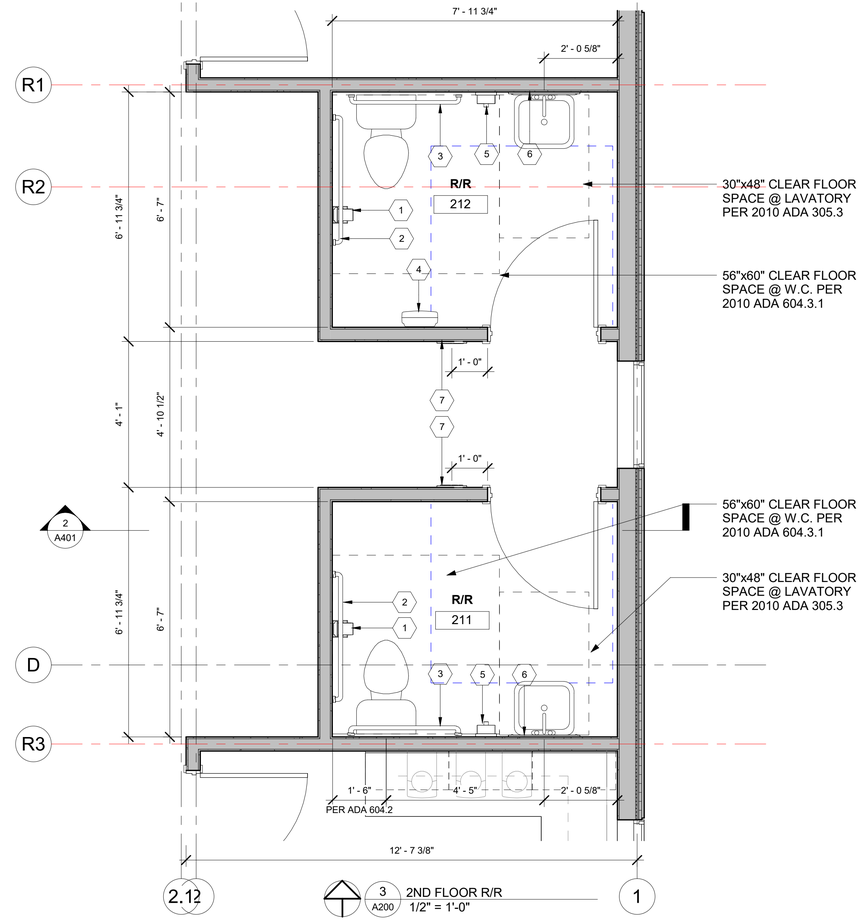

3 A200 2ND FLOOR R/R
1/2" = 1'-0"

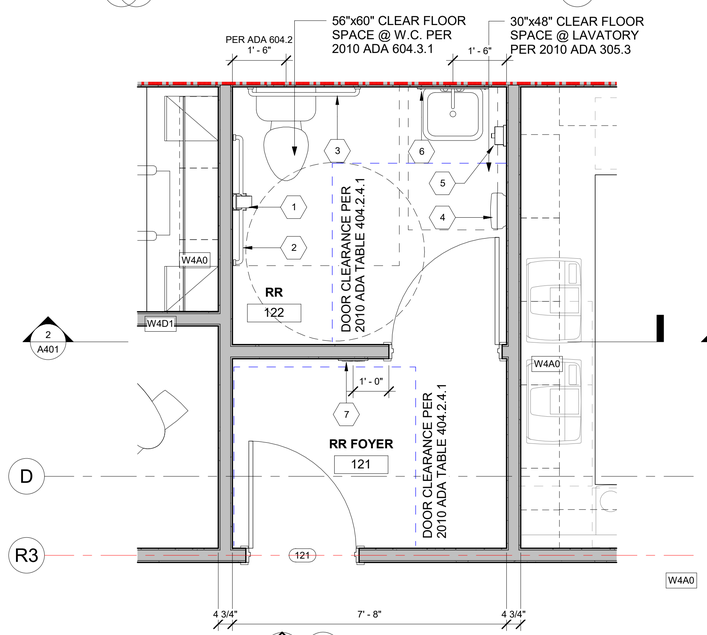

2 A200 PATIENTS RESTROOM
1/2" = 1'-0"

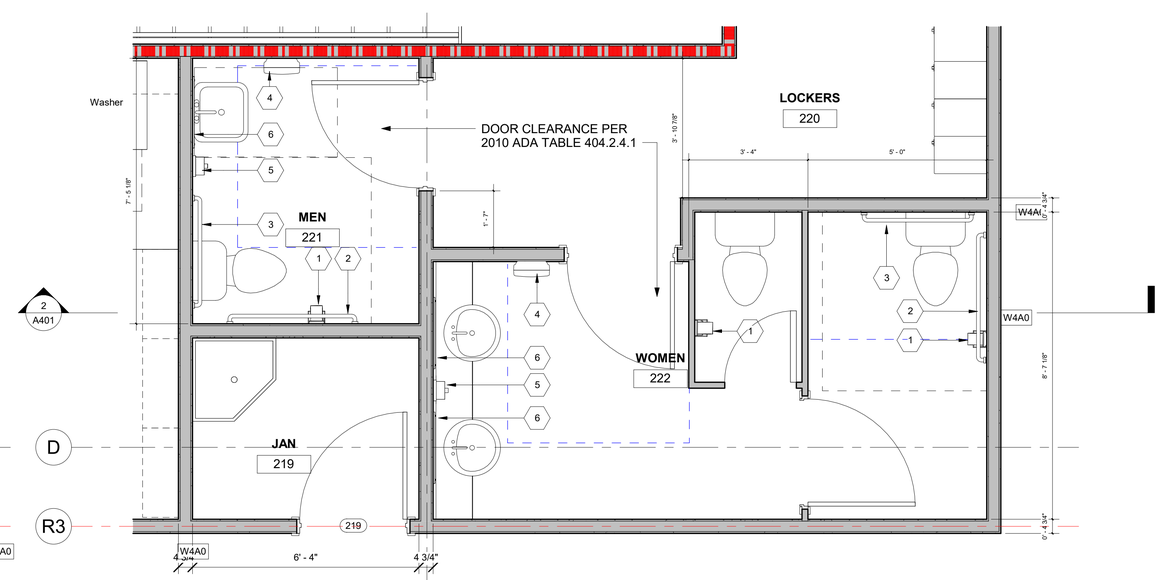

4 A200 STAFF RESTROOMS
1/2" = 1'-0"

TOILET ACCESSORY LEGEND

1. TOILET PAPER DISPENSER - BOBRICK B-2840, SATIN FINISH STAINLESS STEEL
2. 42" GRAB BAR - BOBRICK B-6806, SATIN FINISH STAINLESS STEEL
3. 36" GRAB BAR - BOBRICK B-6806, SATIN FINISH STAINLESS STEEL
4. WALL-MOUNTED PAPEL TOWEL DISPENSER - VERIFY W/OWNER
5. SOAP DISPENSER - VERIFY W/ OWNER
6. 24" X 30" MIRROR - VERIFY W/ OWNER
7. RAISED BRAILLE AND PICTORIAL SYMBOL RESTROOM PER ADA 2010 703.4.1 & 703.4.2 "MEN" OR "WOMEN" AT LOCATIONS SHOWN ON FLOOR PLAN. SEE DETAILS ON SHEET A002
   MEN: ULINE S-15597BL OR EQUAL
   WOMEN: ULINE S-15597BL OR EQUAL
8. TOILET PARTITION - HADRIAN - STANDARD SOLID PLASTIC. COLOR: BLACK. PROVIDE CONTINUOUS LENGTH U-CHANNELS, TYP. ALL DOORS SHALL HAVE 3 HINGES

TOILET NOTES:

A. FLUSH CONTROLS SHALL NOT REQUIRE TIGHT GRASPING, PINCHING OR TWISTING OF THE WRIST.
B. CONTROL FOR FLUSH VALVES SHALL BE MOUNTED IN THE WIDE SIDE OF THE TOILET AREAS
C. PROVIDE SUBMITTALS OF PLUMBING FIXTURES AND TOILETS ACCESSORIES FOR OWNER REVIEW/ APPROVAL
D. REFER TO A002 FOR TYPICAL MOUNTING HEIGHTS

STROUD AND COMPANY
427 8th Street · Macon, Ga 31201
478-743-5097

ALL Architecture, LLC
2052 CHRYSLER DRIVE NE, ATLANTA, GA 30345
TELEPHONE: (404) 316-2896
E-MAIL: INFO@ALLARCHLLC.COM

REVISIONS

NO.	DATE

COPYRIGHT
THIS DRAWING AND ALL REPRODUCTIONS ARE COPYRIGHTED AND THE PROPERTY OF ALL ARCHITECTURE, LLC AND MAY NOT BE USED IN ANY WAY WITHOUT THEIR PERMISSION.

PROJECT TITLE:
HAMILTON DENTAL
222 CHAMBLESS LN,
HAMILTON, GA 31811

STATE OF GEORGIA
JUAN CAMILO ARCHILA
CERTIFICATE NO. 12113
8-2-23
REGISTERED ARCHITECT

DRAWN: JLL	CHECKED: JCA
APPROVED: JCA	ISSUE DATE: 08/02/23

CAD FILE NAME: -

SHEET TITLE:
ENLARGED PLANS

PROJECT NUMBER: 22016

SHEET NO:
A200

SHEET OF

ISSUED FOR CONSTRUCTION

PLOT DATE: 12/11/2018 7:06:02 AM

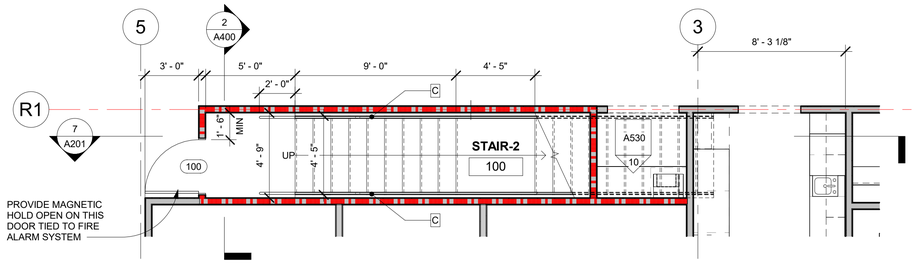

3 A201 STAIR 2 - 1ST FLOOR PLAN
1/4" = 1'-0"

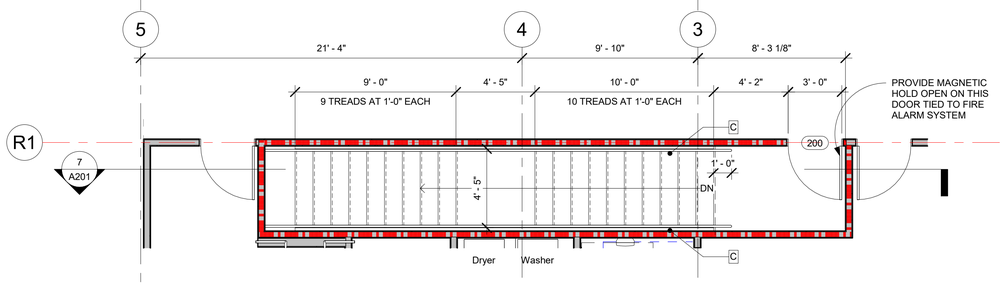

4 A201 STAIR 2 - 2ND FLOOR PLAN
1/4" = 1'-0"

STAIR NOTES:

1. ALL HANDRAILS SHALL HAVE A MINIMUM OF 1-1/2" CLEARANCE FROM WALL OR ADJACENT GUARD RAIL. OUTSIDE DIAMETER OF HANDRAIL SHALL HAVE A CIRCULAR CROSS SECTION OUTSIDE DIAMETER OF 1-1/2".
2. HANDRAILS SHALL BE PROVIDED ON BOTH SIDES OF STAIRS AND SHALL BE CONTINUOUS.
3. TOP OF GRIPPING SURFACES OF HANDRAILS SHALL BE 34" MEASURED ABOVE WALKING SURFACE. TOP OF GUARDRAIL SHALL BE 42" MINIMUM.
4. HANDRAILS SHALL EXTEND 1'-0" AT TOP OF RUN AND 1'-0" PLUS 1 RUN AT THE BOTTOM OF ALL RUNS.

STAIR KEY NOTES:

A. HANDRAILS SHALL EXTEND 1'-0" AT TOP OF RUN.
B. HANDRAILS SHALL EXTEND 1'-0" PLUS 1 RUN AT THE BOTTOM OF ALL STAIR RUNS.
C. PROVIDE HANDRAIL MOUNTED TO WALL.
D. PROVIDE HANDRAIL MOUNTED TO GUARDRAIL.
E. GUARDRAIL, PICKETS @ 4" O.C. MAX.

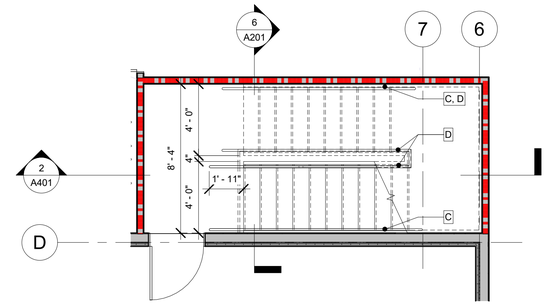

1 A201 STAIR 1 - 1ST FLOOR PLAN
1/4" = 1'-0"

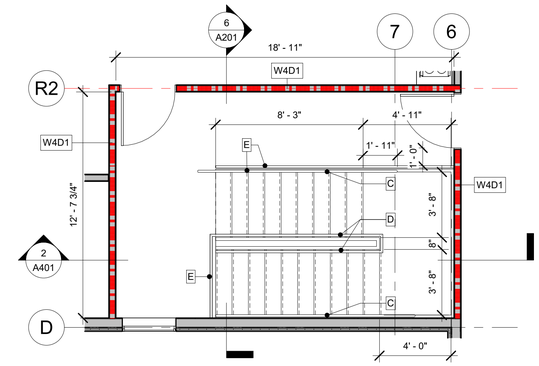

2 A201 STAIR 1 - 2ND FLOOR PLAN
1/4" = 1'-0"

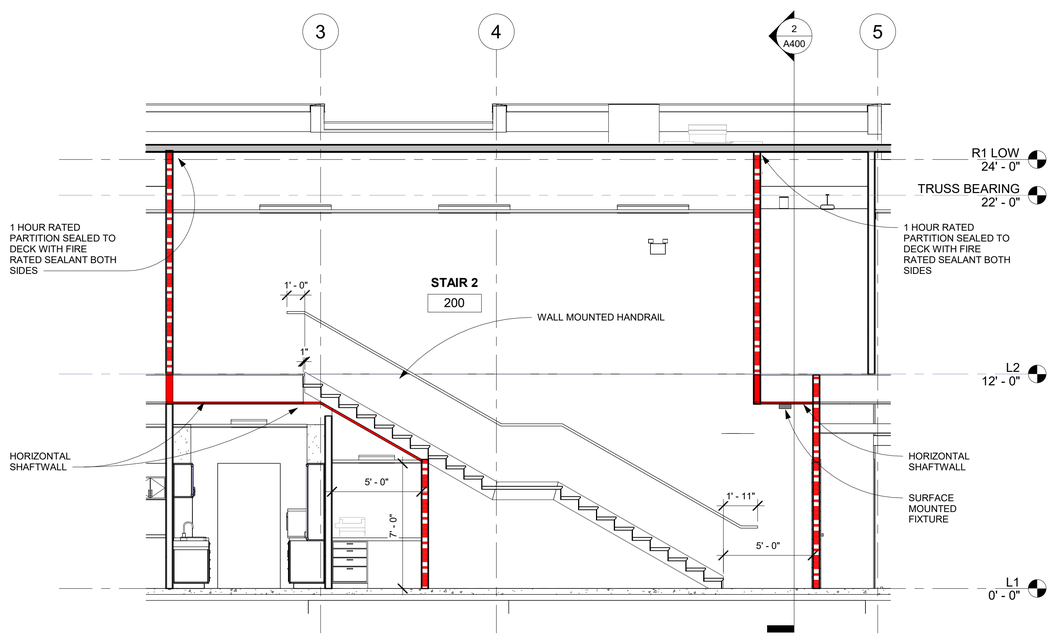

7 A201 SECTION AT STAIR-2
1/4" = 1'-0"

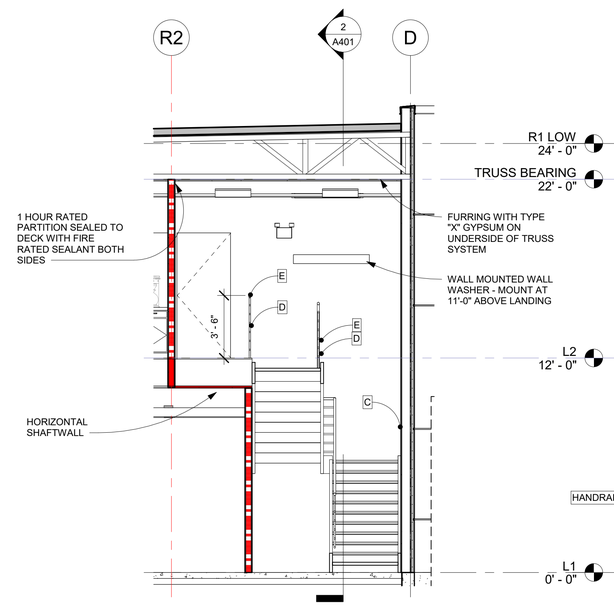

6 A201 SECTION AT STAIR 1 LOOKING EAST
1/4" = 1'-0"

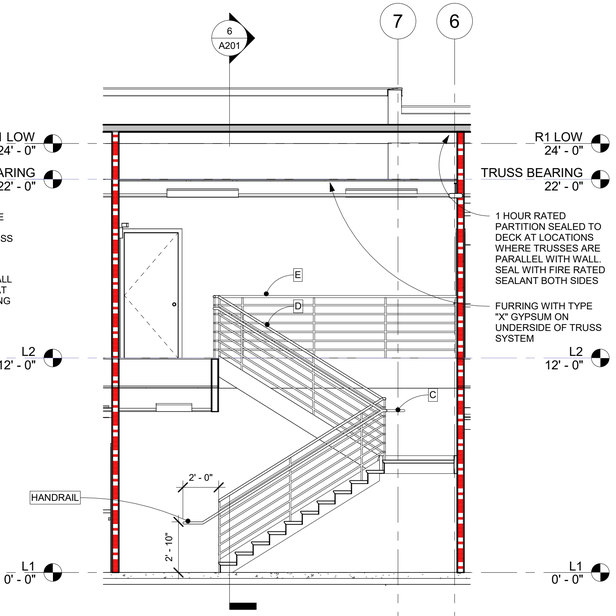

5 A201 SECTION AT STAIR 1 LOOKING NORTH
1/4" = 1'-0"

STROUD AND COMPANY
427 8th Street - Macon, Ga 31201
478-743-5097

ALL Architecture, LLC
2052 CHRYSLER DRIVE NE, ATLANTA, GA 30345
TELEPHONE: (404) 316-2896
E-MAIL: INFO@ALLARCHLLC.COM

REVISIONS

NO.	DATE

COPYRIGHT
THIS DRAWING AND ALL REPRODUCTIONS ARE COPYRIGHTED AND THE PROPERTY OF ALL ARCHITECTURE, LLC AND MAY NOT BE USED IN ANY WAY WITHOUT THEIR PERMISSION.

PROJECT TITLE:
HAMILTON DENTAL
222 CHAMBLESS LN,
HAMILTON, GA 31811

STATE OF GEORGIA
JUAN CAMILO ARCHILA
CERTIFICATE NO. 17113
8-2-23
REGISTERED ARCHITECT

DRAWN: JLL	CHECKED: JCA
APPROVED: JCA	ISSUE DATE: 08/02/23

CAD FILE NAME: -

SHEET TITLE:
ENLARGED PLANS - STAIRS

PROJECT NUMBER: 22016

SHEET NO:
A201

SHEET OF

ISSUED FOR CONSTRUCTION

PLOT DATE: 12/11/2018 7:06:02 AM

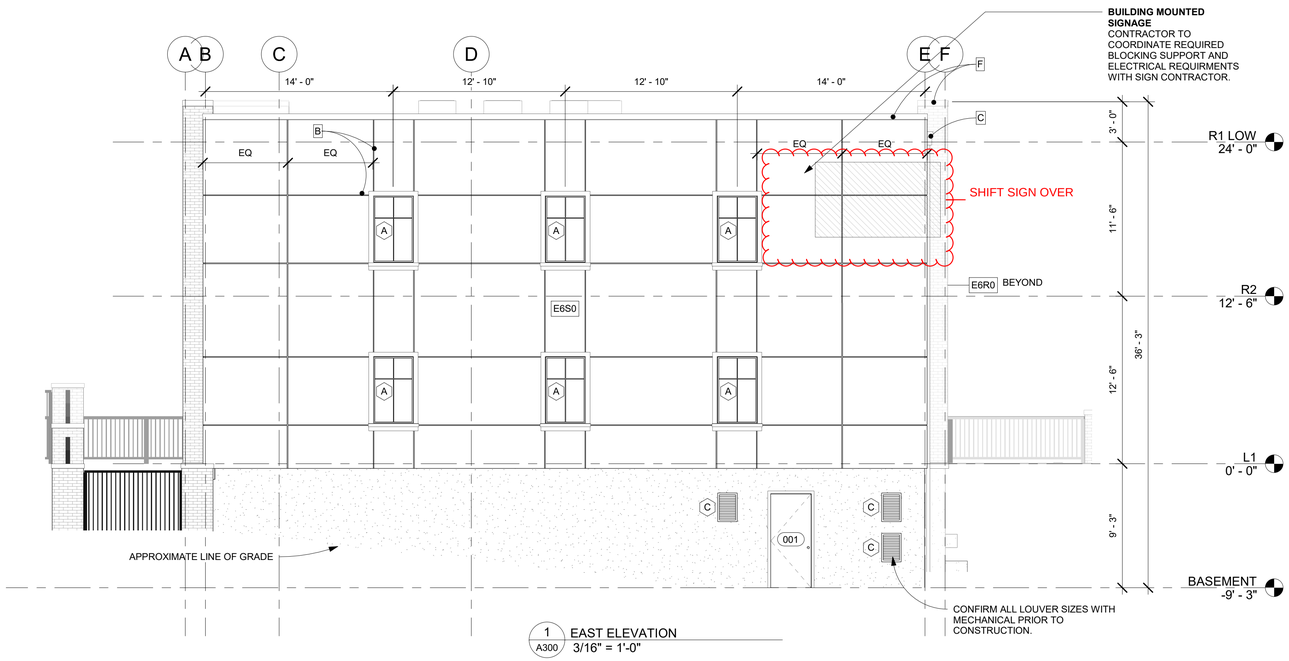

1 A300 EAST ELEVATION
3/16" = 1'-0"

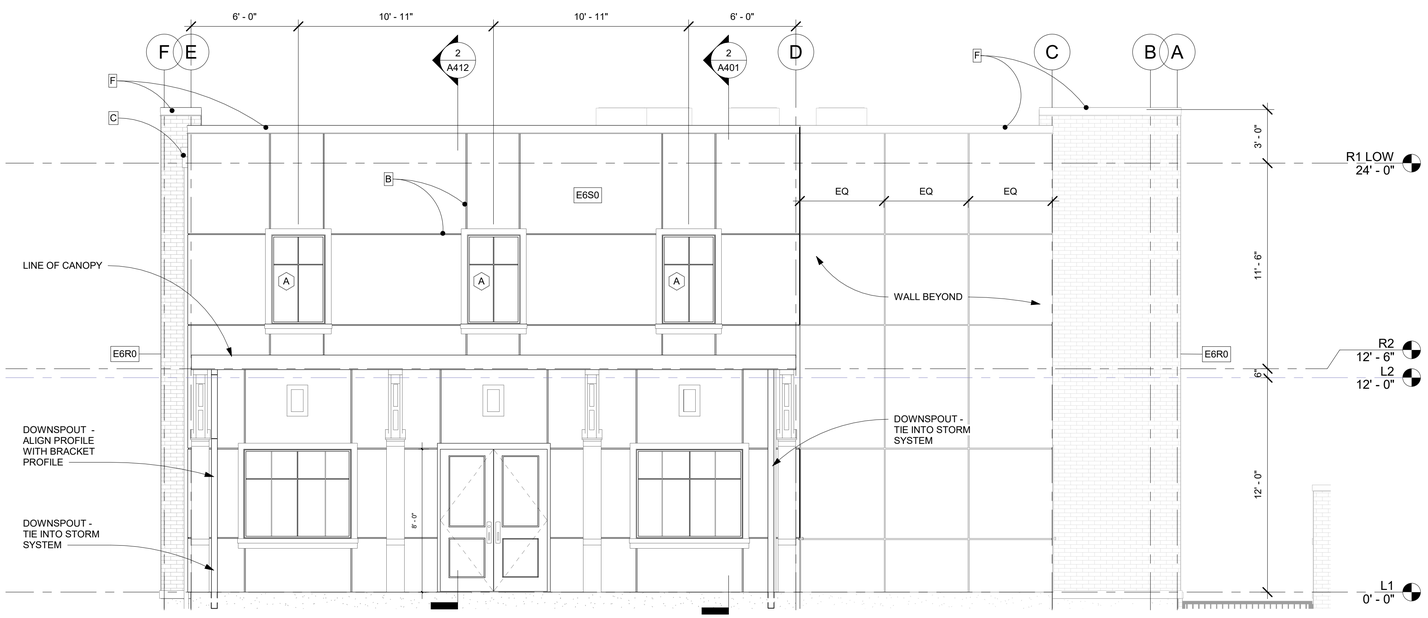

2 A300 WEST ELEVATION
1/4" = 1'-0"

WINDOW SCHEDULE

Type Mark	Description	R.O. Width	R.O. Height	Comments
A	SINGLE BRONZE ANODIZED WINDOW	3' - 0"	5' - 0"	
A1	SINGLE BRONZE ANODIZED WINDOW WITH SPANDREL GLASS	3' - 0"	5' - 0"	SPANDREL GLASS WITH ENCLOSURE BEHIND
B	DOUBLE BRONZE ANODIZED WINDOW	6' - 0"	5' - 0"	
C	LOUVER	1' - 4"	2' - 0"	

CONFIRM SIZE WITH MECHANICAL

EXTERIOR ELEVATION NOTES:

1. ALIGN HORIZONTAL AND VERTICAL CONTROL JOINTS WITH TOP AND BOTTOM OF WINDOWS AND VERITICAL CONTROL JOINTS WITH SIDES OF WINDOWS AND AT LOCATIONS SHOWN IN ELEVATIONS
2. ALIGN TOP OF CONDUCTOR HEAD WITH TOP OF OVERFLOW SCUPPER. BOTTOM OF OVERFLOW SCUPPER SHALL BE 1" ABOVE THE TOP OF ROOF. CENTER CONDUCTOR HEAD AND OVERFLOW SCUPPER BETWEEN STUCCO CONTROL JOINTS OR BETWEEN STUCCO CONTROL JOINT AND RETURN WALL.

KEY NOTES:

A

A. ALIGN TOP OF CONDUCTOR HEAD WITH TOP OF OVERFLOW SCUPPER. BOTTOM OF OVERFLOW SCUPPER SHALL BE 1" ABOVE THE TOP OF ROOF
B. ALIGN HORIZONTAL CONTROL JOINTS WITH TOP AND BOTTOM OF WINDOWS AND VERITICAL CONTROL JOINTS WITH SIDES OF WINDOWS.
C. CONDUCTOR HEAD WITH DOWNSPOUT
D. OVERFLOW SCUPPER
E. CONTRACTOR TO COORDINATE ROUTING MECHANICAL DUCTWORK THROUGH ROOF TRUSSES. SEE MECHANICAL AND STRUCTURAL
F. PREFINISHED METAL COPING

MATERIALS LEGEND:

E6S0 SMOOTH FINISH

E6R0 BRICK STAMPED FINISH

CONCRETE FINISH AS SPECIFIED

STROUD AND COMPANY
427 8th Street · Macon, Ga 31201
478-743-5097

ALL Architecture, LLC
2052 CHRYSLER DRIVE NE, ATLANTA, GA 30345
TELEPHONE: (404) 316-2896
E-MAIL: INFO@ALLARCHLLC.COM

REVISIONS

NO.	DATE

COPYRIGHT
THIS DRAWING AND ALL REPRODUCTIONS ARE COPYRIGHTED AND THE PROPERTY OF ALL ARCHITECTURE, LLC AND MAY NOT BE USED IN ANY WAY WITHOUT THEIR PERMISSION.

PROJECT TITLE:
HAMILTON DENTAL
222 CHAMBLESS LN,
HAMILTON, GA 31811

STATE OF GEORGIA
JUAN CAMILO ARCHILA
6-2-23
CERTIFICATE NO. 12119
REGISTERED ARCHITECT

DRAWN: JLL	CHECKED: JCA
APPROVED: JCA	ISSUE DATE: 08/02/23

CAD FILE NAME: -

SHEET TITLE:
EXTERIOR ELEVATIONS

PROJECT NUMBER: 22016

SHEET NO:
A300
SHEET OF

ISSUED FOR CONSTRUCTION

PLOT DATE: 12/11/2018 7:06:02 AM

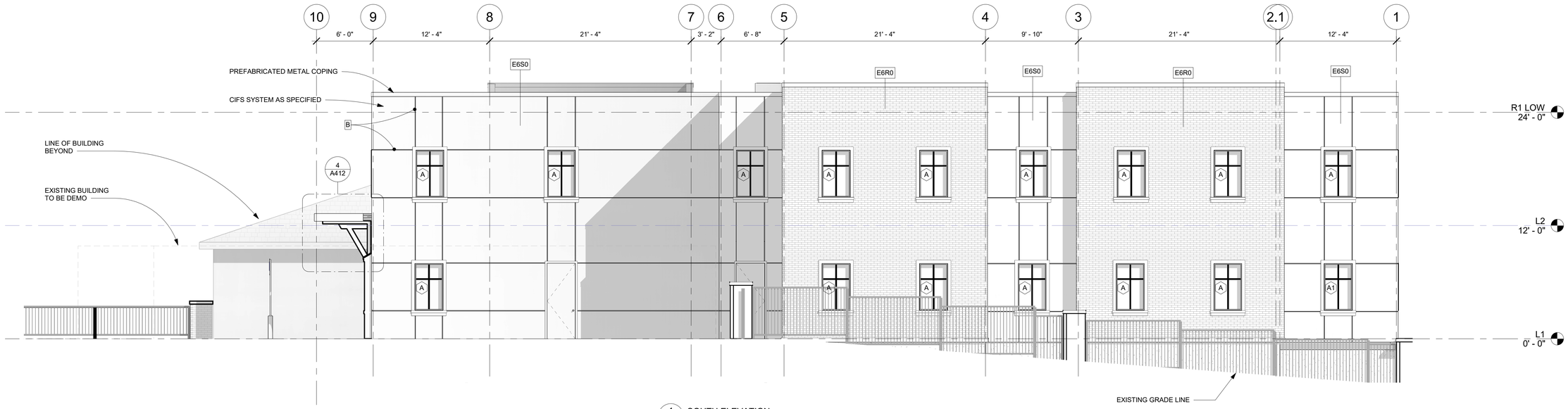

1 / A301 SOUTH ELEVATION
3/16" = 1'-0"

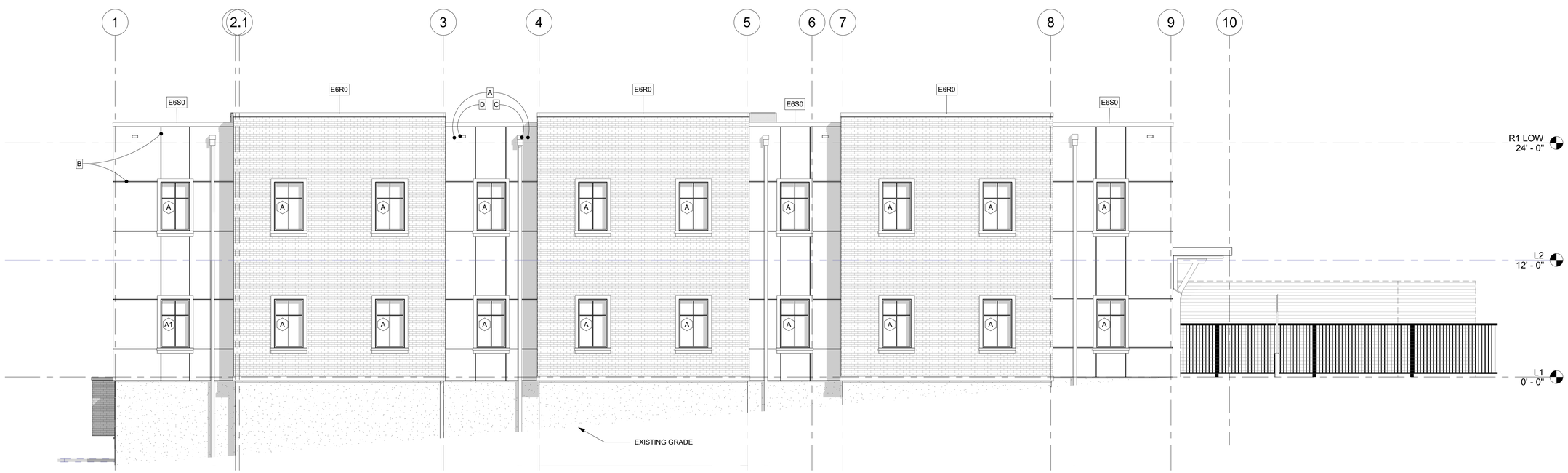

2 / A301 NORTH ELEVATION
3/16" = 1'-0"

MATERIALS LEGEND:

E6S0	SMOOTH FINISH
E6R0	BRICK STAMPED FINISH
	CONCRETE FINISH AS SPECIFIED

KEY NOTES:

A

A. ALIGN TOP OF CONDUCTOR HEAD WITH TOP OF OVERFLOW SCUPPER. BOTTOM OF OVERFLOW SCUPPER SHALL BE 1" ABOVE THE TOP OF ROOF

B. ALIGN HORIZONTAL CONTROL JOINTS WITH TOP AND BOTTOM OF WINDOWS AND VERITICAL CONTROL JOINTS WITH SIDES OF WINDOWS.

C. CONDUCTOR HEAD WITH DOWNSPOUT

D. OVERFLOW SCUPPER

E. CONTRACTOR TO COORDINATE ROUTING MECHANICAL DUCTWORK THROUGH ROOF TRUSSES. SEE MECHANICAL AND STRUCTURAL

F. PREFINISHED METAL COPING

EXTERIOR ELEVATION NOTES:

1. ALIGN HORIZONTAL AND VERTICAL CONTROL JOINTS WITH TOP AND BOTTOM OF WINDOWS AND VERITICAL CONTROL JOINTS WITH SIDES OF WINDOWS AND AT LOCATIONS SHOWN IN ELEVATIONS

2. ALIGN TOP OF CONDUCTOR HEAD WITH TOP OF OVERFLOW SCUPPER. BOTTOM OF OVERFLOW SCUPPER SHALL BE 1" ABOVE THE TOP OF ROOF. CENTER CONDUCTOR HEAD AND OVERFLOW SCUPPER BETWEEN STUCCO CONTROL JOINTS OR BETWEEN STUCCO CONTROL JOINT AND RETURN WALL.

STROUD AND COMPANY
427 8th Street · Macon, Ga 31201
478-743-5097

ALL Architecture, LLC
2052 CHRYSLER DRIVE NE, ATLANTA, GA 30345
TELEPHONE: (404) 316-2896
E-MAIL: INFO@ALLARCHLLC.COM

REVISIONS	
NO.	DATE

COPYRIGHT
THIS DRAWING AND ALL REPRODUCTIONS ARE COPYRIGHTED AND THE PROPERTY OF ALL ARCHITECTURE, LLC AND MAY NOT BE USED IN ANY WAY WITHOUT THEIR PERMISSION.

PROJECT TITLE:
HAMILTON DENTAL
222 CHAMBLESS LN,
HAMILTON, GA 31811

STATE OF GEORGIA
JUAN CAMILO ARCHILA
8-2-23
CERTIFICATE NO. 10113
REGISTERED ARCHITECT

DRAWN: JLL	CHECKED: JCA
APPROVED: JCA	ISSUE DATE: 08/02/23

CAD FILE NAME: -

SHEET TITLE:
EXTERIOR ELEVATIONS

PROJECT NUMBER: 22016

SHEET NO:
A301

SHEET OF

ISSUED FOR CONSTRUCTION

PLOT DATE: 12/11/2018 7:06:02 AM

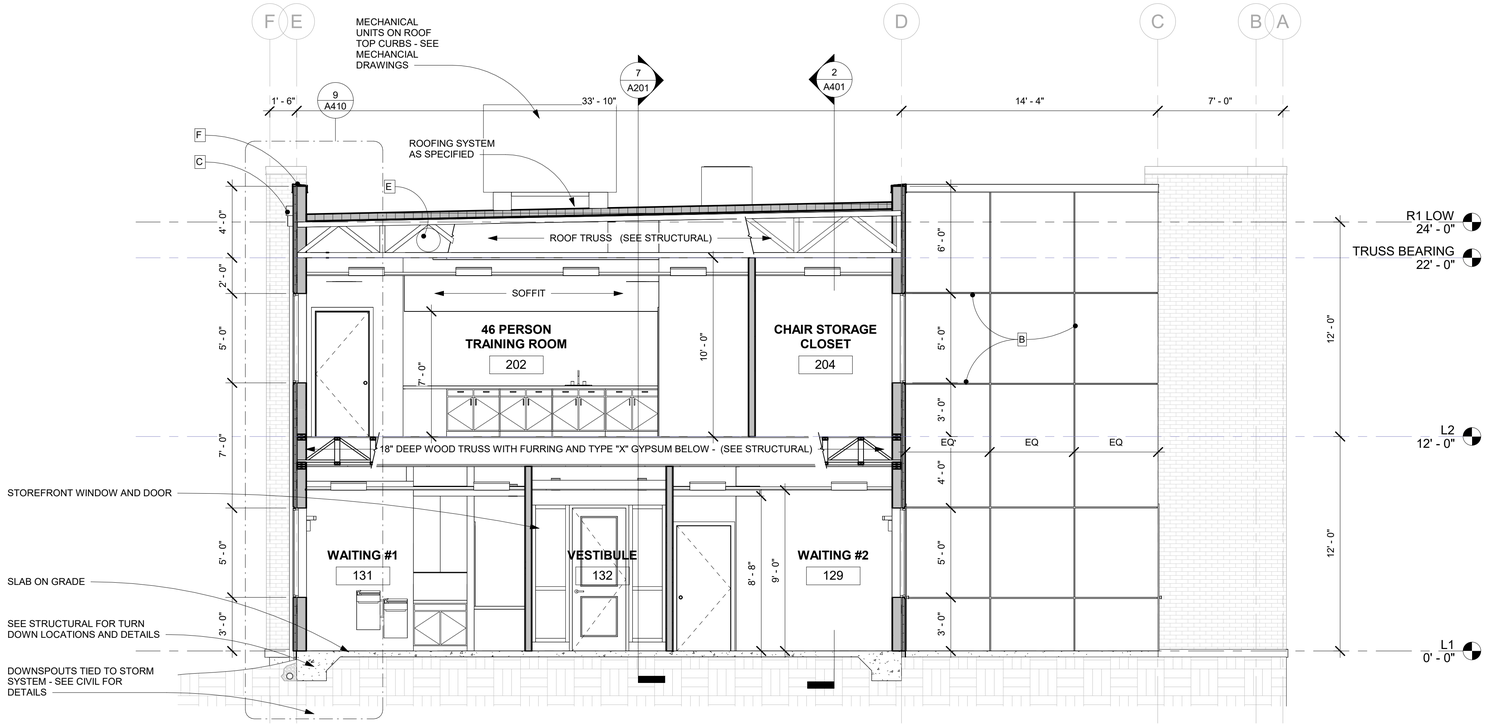

1 A400 N/S BUILDING SECTION LOOKING EAST AT LOBBY 1/4" = 1'-0"

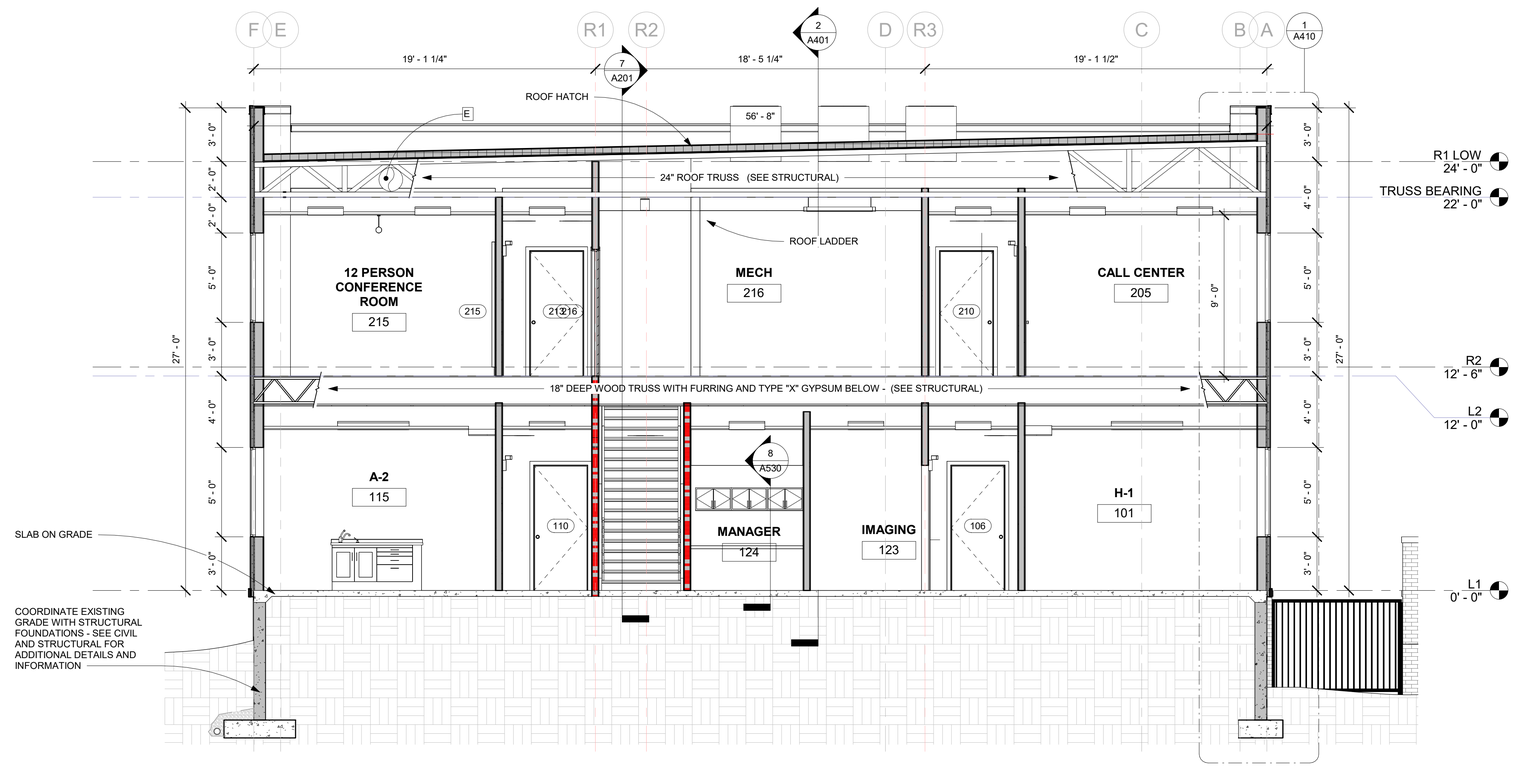

2 A400 N/S BUILDING SECTION LOOKING EAST 1/4" = 1'-0"

GENERAL NOTES:

1. ROOF STRUCTURE SLOPES TO DRAINS. SEE STRUCTURAL DRAWINGS FOR TRUSS DESIGN
2. CONTRACTOR TO COORDINATE ROUTING MECHANICAL DUCTWORK THROUGH ROOF TRUSSES. SEE MECHANICAL AND STRUCTURAL
3. PROVIDE TAPERED INSULATION TO DRAINS AND AROUND MECHANICAL CURBS.
4. ALIGN TOP OF CONDUCTOR HEAD WITH TOP OF OVERFLOW SCUPPER. BOTTOM OF OVERFLOW SCUPPER SHALL BE 1" ABOVE THE TOP OF TOOF

EXTERIOR ELEVATION NOTES:

1. ALIGN HORIZONTAL AND VERTICAL CONTROL JOINTS WITH TOP AND BOTTOM OF WINDOWS AND VERITICAL CONTROL JOINTS WITH SIDES OF WINDOWS AND AT LOCATIONS SHOWN IN ELEVATIONS
2. ALIGN TOP OF CONDUCTOR HEAD WITH TOP OF OVERFLOW SCUPPER. BOTTOM OF OVERFLOW SCUPPER SHALL BE 1" ABOVE THE TOP OF ROOF. CENTER CONDUCTOR HEAD AND OVERFLOW SCUPPER BETWEEN STUCCO CONTROL JOINTS OR BETWEEN STUCCO CONTROL JOINT AND RETURN WALL.

KEY NOTES:

A.
B.
C.
D.
E.
F.

A. ALIGN TOP OF CONDUCTOR HEAD WITH TOP OF OVERFLOW SCUPPER. BOTTOM OF OVERFLOW SCUPPER SHALL BE 1" ABOVE THE TOP OF ROOF
B. ALIGN HORIZONTAL CONTROL JOINTS WITH TOP AND BOTTOM OF WINDOWS AND VERITICAL CONTROL JOINTS WITH SIDES OF WINDOWS.
C. CONDUCTOR HEAD WITH DOWNSPOUT
D. OVERFLOW SCUPPER
E. CONTRACTOR TO COORDINATE ROUTING MECHANICAL DUCTWORK THROUGH ROOF TRUSSES. SEE MECHANICAL AND STRUCTURAL
F. PREFINISHED METAL COPING

STROUD AND COMPANY
427 8th Street · Macon, Ga 31201
478-743-5097

ALL Architecture, LLC
2052 CHRYSLER DRIVE NE, ATLANTA, GA 30345
TELEPHONE: (404) 316-2896
E-MAIL: INFO@ALLARCHLLC.COM

REVISIONS

NO.	DATE

COPYRIGHT
THIS DRAWING AND ALL REPRODUCTIONS ARE COPYRIGHTED AND THE PROPERTY OF ALL ARCHITECTURE, LLC AND MAY NOT BE USED IN ANY WAY WITHOUT THEIR PERMISSION.

PROJECT TITLE:
HAMILTON DENTAL
222 CHAMBLESS LN,
HAMILTON, GA 31811

STATE OF GEORGIA · JUAN CAMILO ARCHILA · CERTIFICATE NO. 12113 · REGISTERED ARCHITECT · 8-2-23

DRAWN: JLL	CHECKED: JCA
APPROVED: JCA	ISSUE DATE: 08/02/23

CAD FILE NAME: -

SHEET TITLE:
BUILDING SECTIONS

PROJECT NUMBER: 22016

SHEET NO:
A400

SHEET OF

ISSUED FOR CONSTRUCTION

PLOT DATE: 12/11/2018 7:06:02 AM

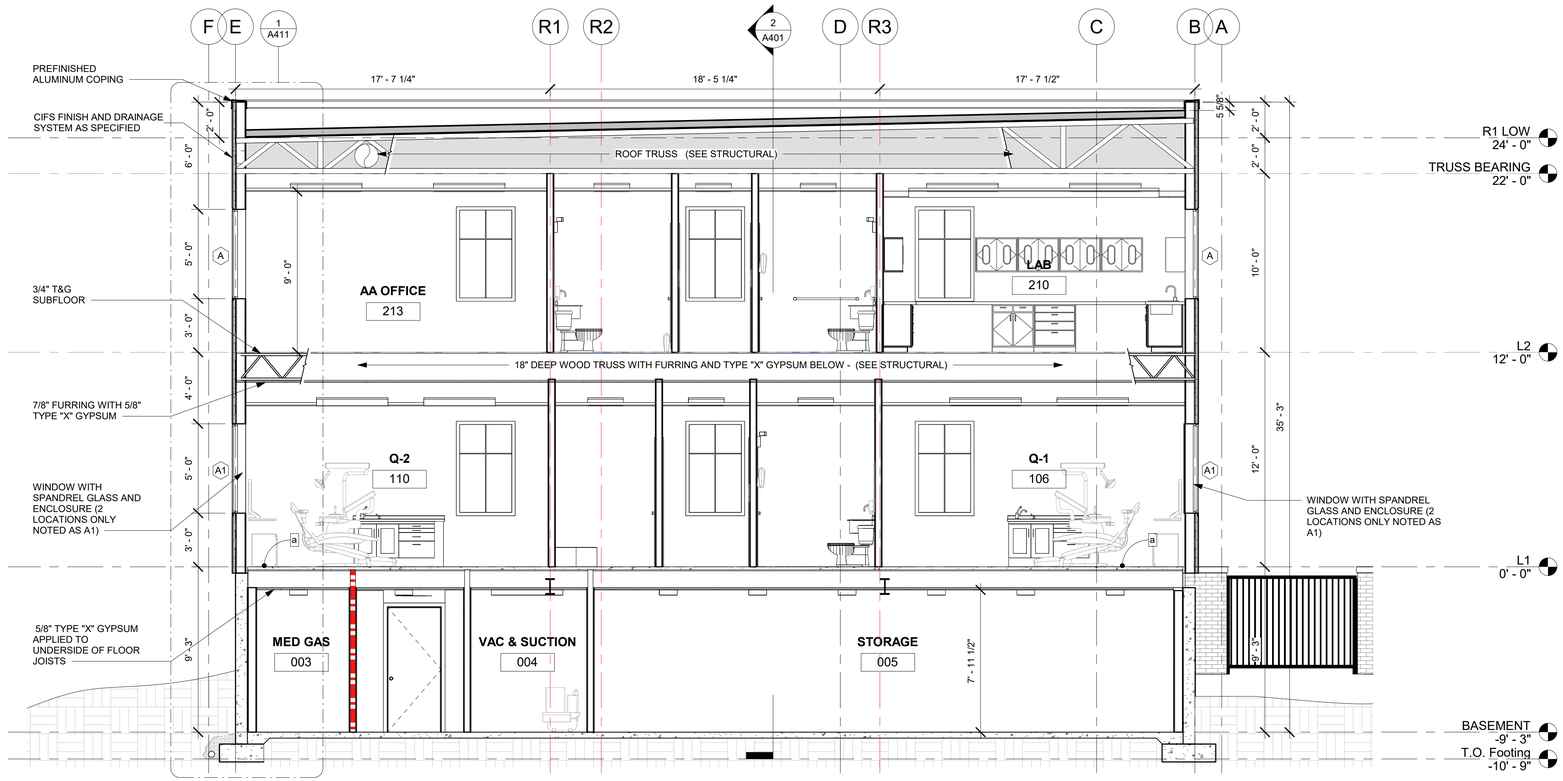

1 A401 N/S BUILDING SECTION
LOOKING EAST AT BASEMENT
1/4" = 1'-0"

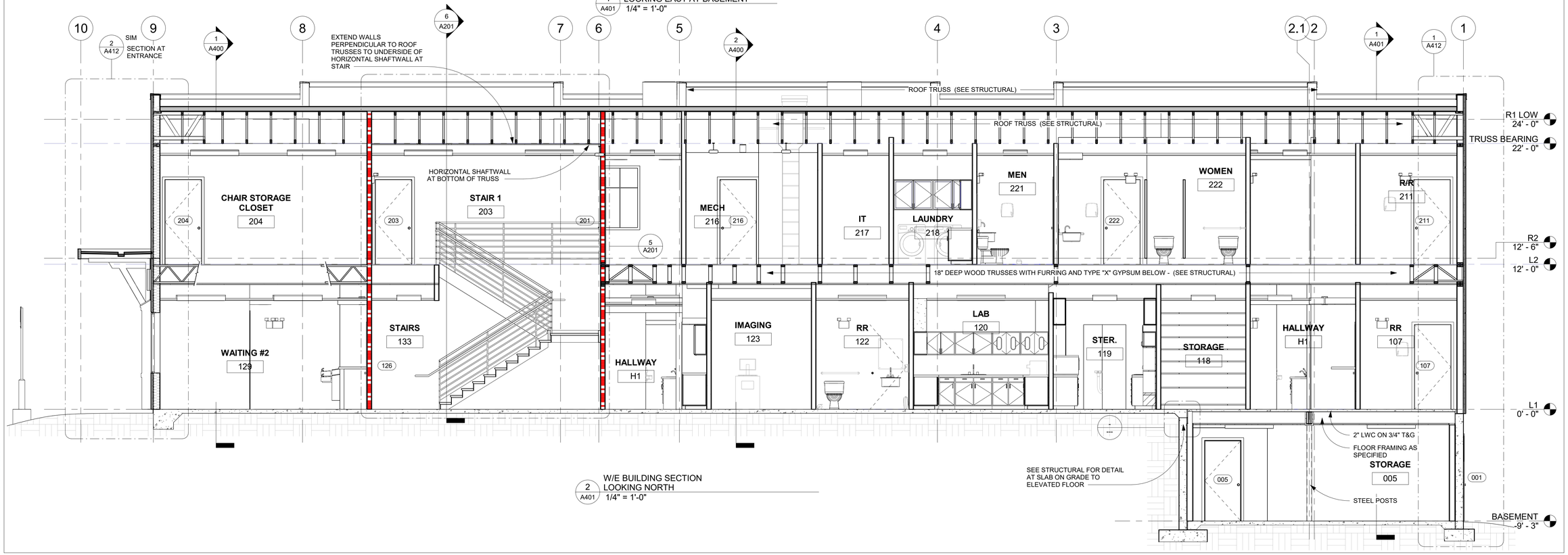

2 A401 W/E BUILDING SECTION
LOOKING NORTH
1/4" = 1'-0"

GENERAL NOTES:

1. ROOF STRUCTURE SLOPES TO DRAINS. SEE STRUCTURAL DRAWINGS FOR TRUSS DESIGN
2. CONTRACTOR TO COORDINATE ROUTING MECHANICAL DUCTWORK THROUGH ROOF TRUSSES. SEE MECHANICAL AND STRUCTURAL
3. PROVIDE TAPERED INSULATION TO DRAINS AND AROUND MECHANICAL CURBS.
4. ALIGN TOP OF CONDUCTOR HEAD WITH TOP OF OVERFLOW SCUPPER. BOTTOM OF OVERFLOW SCUPPER SHALL BE 1" ABOVE THE TOP OF TOOF

EXTERIOR ELEVATION NOTES:

1. ALIGN HORIZONTAL AND VERTICAL CONTROL JOINTS WITH TOP AND BOTTOM OF WINDOWS AND VERITICAL CONTROL JOINTS WITH SIDES OF WINDOWS AND AT LOCATIONS SHOWN IN ELEVATIONS
2. ALIGN TOP OF CONDUCTOR HEAD WITH TOP OF OVERFLOW SCUPPER. BOTTOM OF OVERFLOW SCUPPER SHALL BE 1" ABOVE THE TOP OF ROOF. CENTER CONDUCTOR HEAD AND OVERFLOW SCUPPER BETWEEN STUCCO CONTROL JOINTS OR BETWEEN STUCCO CONTROL JOINT AND RETURN WALL.

KEY NOTES:

A

A. ALIGN TOP OF CONDUCTOR HEAD WITH TOP OF OVERFLOW SCUPPER. BOTTOM OF OVERFLOW SCUPPER SHALL BE 1" ABOVE THE TOP OF ROOF
B. ALIGN HORIZONTAL CONTROL JOINTS WITH TOP AND BOTTOM OF WINDOWS AND VERITICAL CONTROL JOINTS WITH SIDES OF WINDOWS.
C. CONDUCTOR HEAD WITH DOWNSPOUT
D. OVERFLOW SCUPPER
E. CONTRACTOR TO COORDINATE ROUTING MECHANICAL DUCTWORK THROUGH ROOF TRUSSES. SEE MECHANICAL AND STRUCTURAL
F. PREFINISHED METAL COPING

STROUD AND COMPANY
427 8th Street · Macon, Ga 31201
478-743-5097

ALL Architecture, LLC
2052 CHRYSLER DRIVE NE, ATLANTA, GA 30345
TELEPHONE: (404) 316-2896
E-MAIL: INFO@ALLARCHLLC.COM

REVISIONS

NO.	DATE

COPYRIGHT
THIS DRAWING AND ALL REPRODUCTIONS ARE COPYRIGHTED AND THE PROPERTY OF ALL ARCHITECTURE, LLC AND MAY NOT BE USED IN ANY WAY WITHOUT THEIR PERMISSION.

PROJECT TITLE:

HAMILTON DENTAL

222 CHAMBLESS LN,
HAMILTON, GA 31811

STATE OF GEORGIA
JUAN CAMILO ARCHILA
CERTIFICATE NO. 17113
REGISTERED ARCHITECT
8-2-23

DRAWN: JLL	CHECKED: JCA
APPROVED: JCA	ISSUE DATE: 08/02/23

CAD FILE NAME: -

SHEET TITLE:

BUILDING SECTIONS

PROJECT NUMBER: 22016

SHEET NO:

A401

SHEET OF

ISSUED FOR CONSTRUCTION

PLOT DATE: 12/11/2018 7:06:02 AM

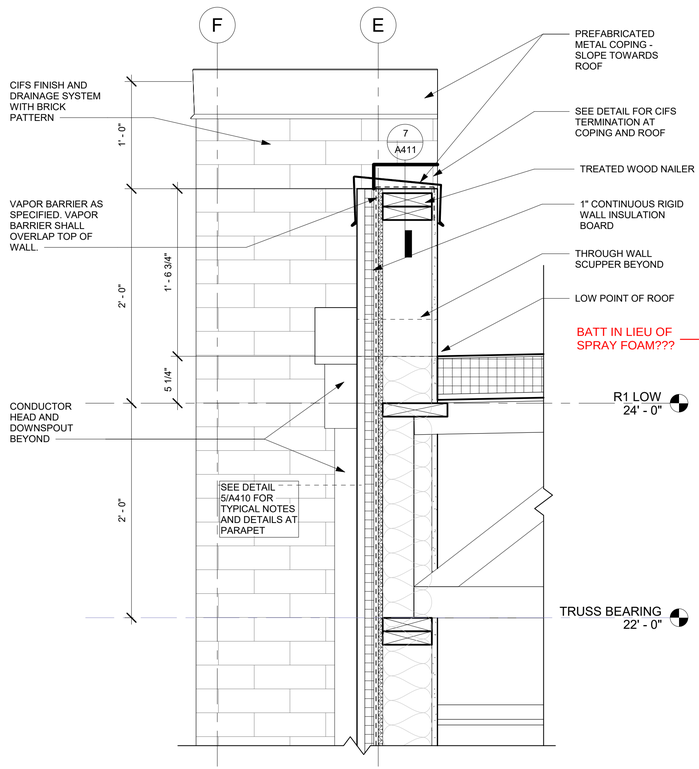

10 A410 TYPICAL DETAIL AT LOW PARAPET
1 1/2" = 1'-0"

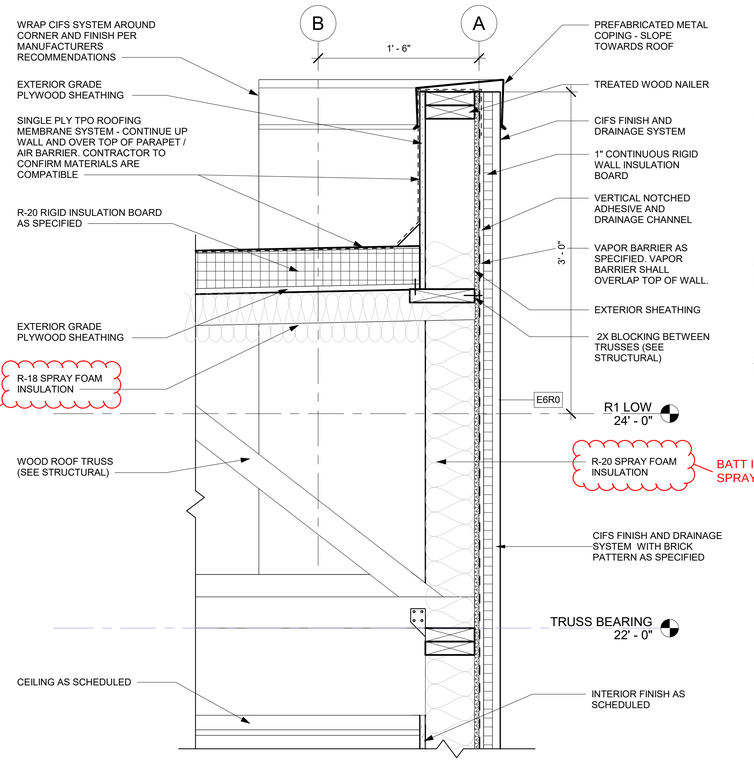

5 A410 TYPICAL DETAIL AT BRICK PARAPET
1 1/2" = 1'-0"

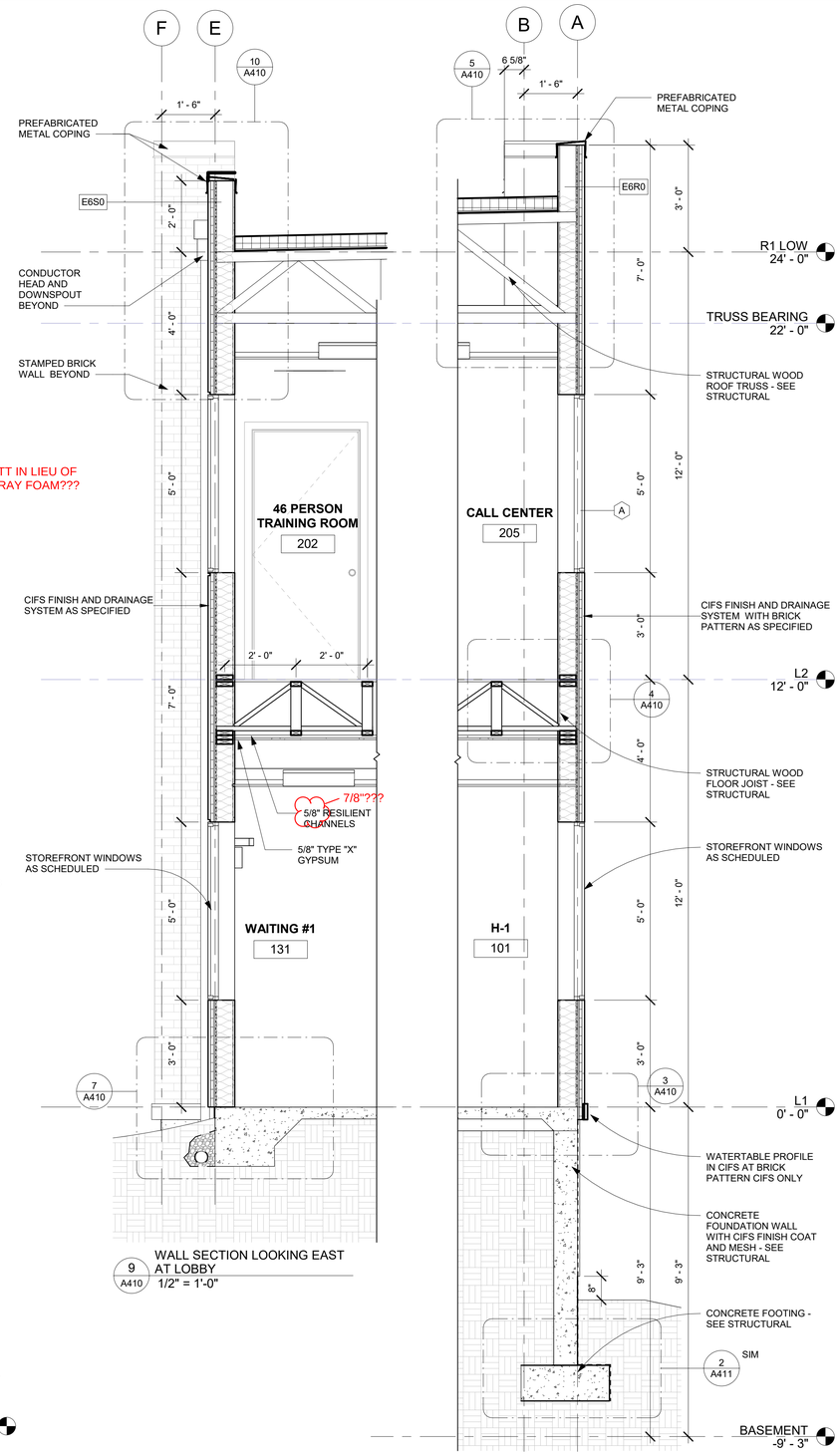

9 A410 WALL SECTION LOOKING EAST AT LOBBY
1/2" = 1'-0"

1 A410 N/S WALL SECTION AT BRICK
1/2" = 1'-0"

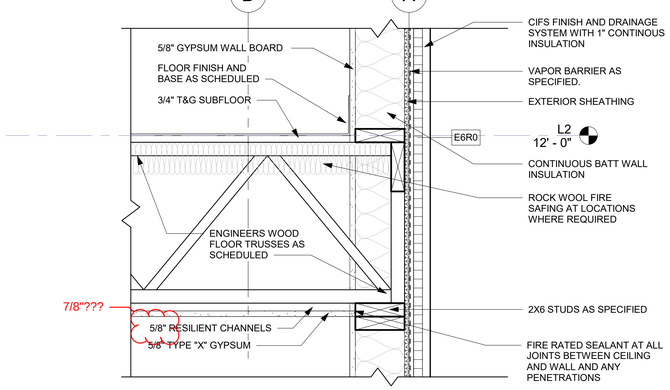

4 A410 TYPICAL DETAIL AT FLOOR JOISTS
1 1/2" = 1'-0"

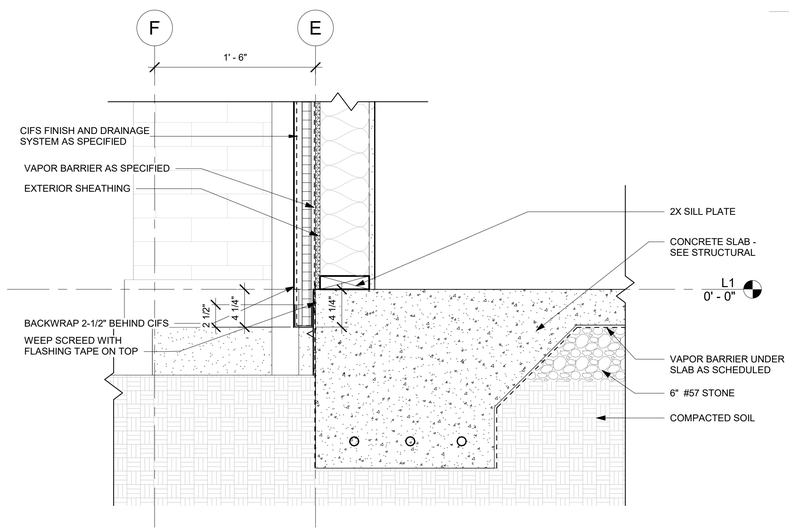

7 A410 DETAIL AT TYPICAL TURN DOWN SLAB
1 1/2" = 1'-0"

AT LOCATIONS WITHIN 1'-0" OF GRADE

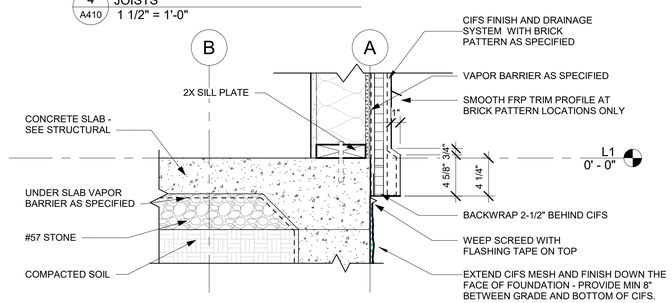

3 A410 DETAIL AT WATERTABLE PROFILE
1 1/2" = 1'-0"

PLOT DATE: 12/11/2018 7:06:02 AM

STROUD AND COMPANY
427 8th Street · Macon, Ga 31201
478-743-5097

ALL Architecture, LLC
2052 CHRYSLER DRIVE NE, ATLANTA, GA 30345
TELEPHONE: (404) 316-2896
E-MAIL: INFO@ALLARCHLLC.COM

REVISIONS

NO.	DATE

COPYRIGHT
THIS DRAWING AND ALL REPRODUCTIONS ARE COPYRIGHTED AND THE PROPERTY OF ALL ARCHITECTURE, LLC AND MAY NOT BE USED IN ANY WAY WITHOUT THEIR PERMISSION.

PROJECT TITLE:
HAMILTON DENTAL
222 CHAMBLESS LN,
HAMILTON, GA 31811

STATE OF GEORGIA
JUAN CAMILO ARCHILA
CERTIFICATE NO. 12113
8-2-23
REGISTERED ARCHITECT

DRAWN: JLL	CHECKED: JCA
APPROVED: JCA	ISSUE DATE: 08/02/23
CAD FILE NAME: -	

SHEET TITLE:
WALL SECTIONS AND DETAILS

PROJECT NUMBER: 22016

SHEET NO:
A410

SHEET OF

ISSUED FOR CONSTRUCTION

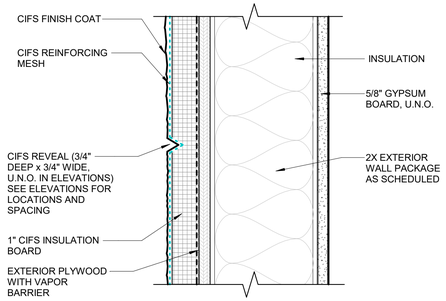

10 A411 CIFS DETAIL AT REVEAL
3" = 1'-0"

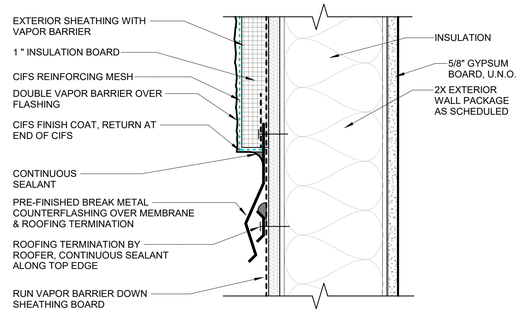

7 A411 CIFS AT ROOF TERMINATION
3" = 1'-0"

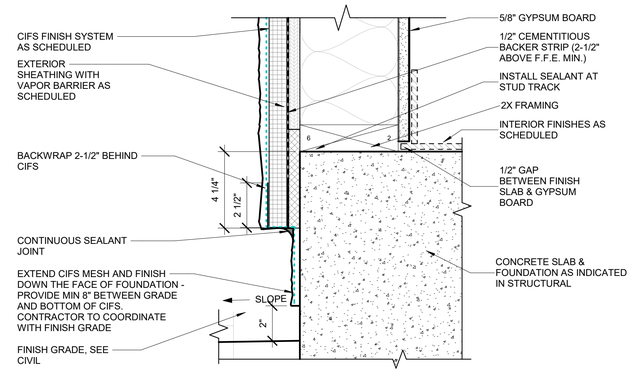

4 A411 CIFS BASE AT GRADE
3" = 1'-0"

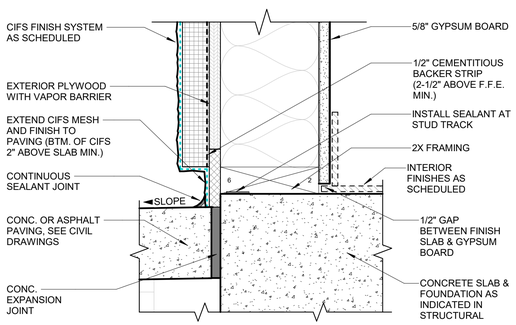

9 A411 CIFS BASE AT PAVING
3" = 1'-0"

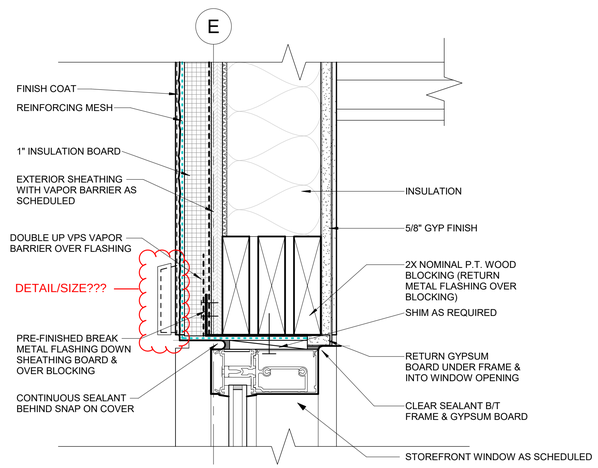

6 A411 TYPICAL DETAIL AT WINDOW HEAD
3" = 1'-0"

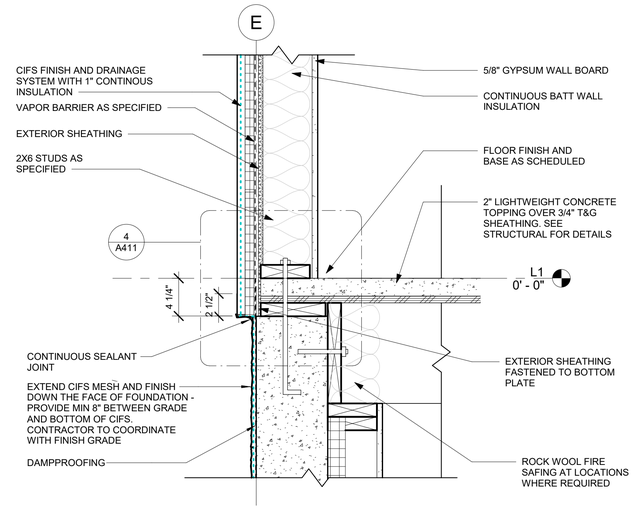

3 A411 DETAIL AT ELEVATED SLAB
1 1/2" = 1'-0"

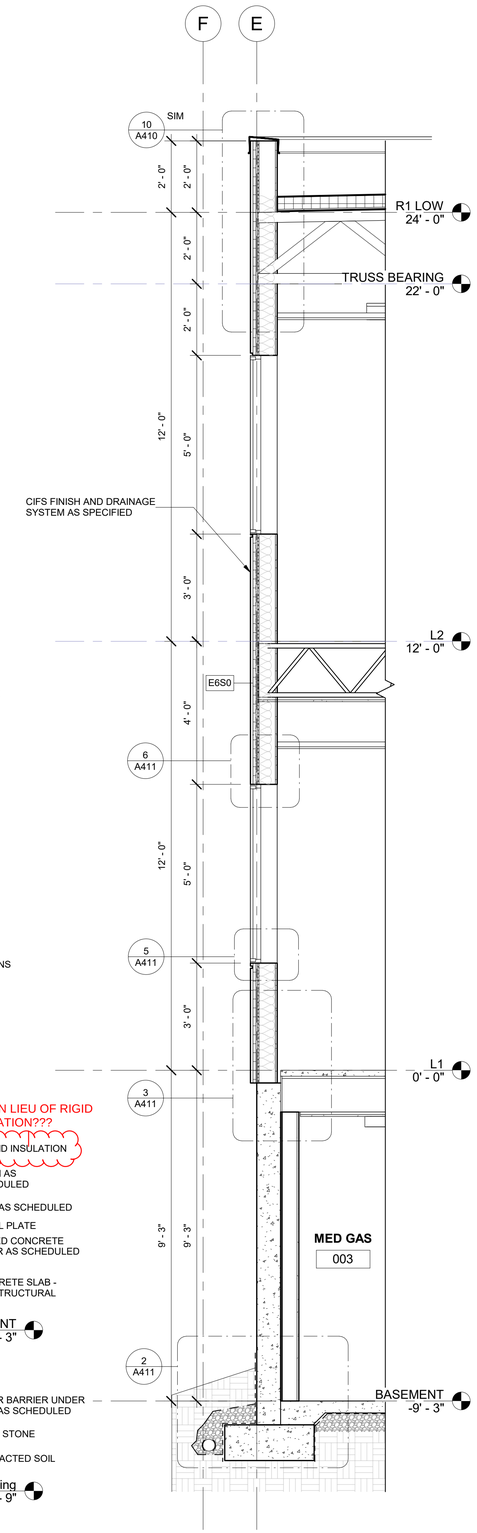

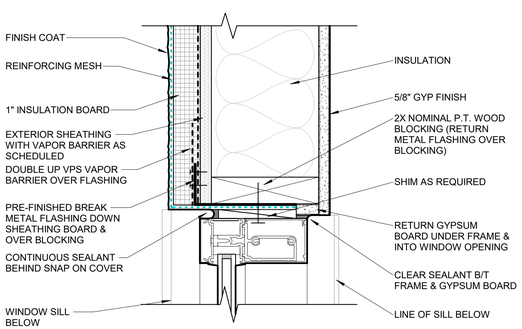

8 A411 WINDOW JAMB AT STOREFRONT
3" = 1'-0"

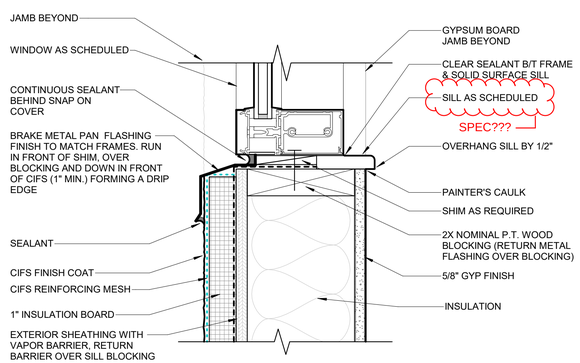

5 A411 SILL AT STOREFRONT
3" = 1'-0"

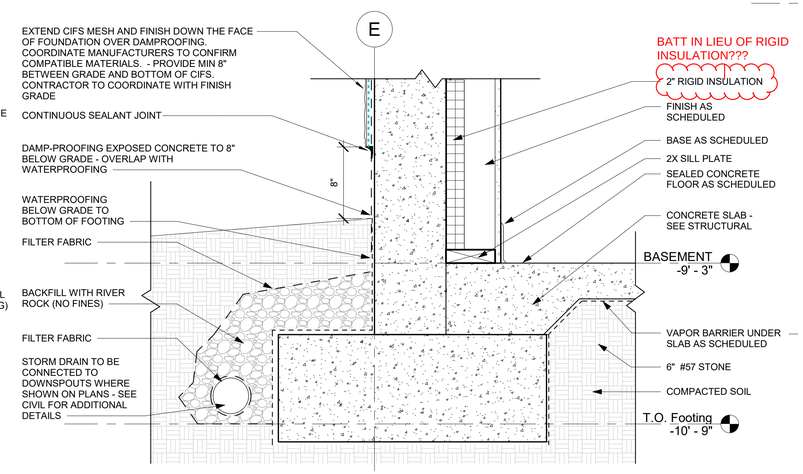

2 A411 DETAIL AT FOUNDATION
1 1/2" = 1'-0"

1 A411 N/S WALL SECTION AT BASEMENT
1/2" = 1'-0"

STROUD AND COMPANY
427 8th Street · Macon, Ga 31201
478-743-5097

ALL Architecture, LLC
2052 CHRYSLER DRIVE NE, ATLANTA, GA 30345
TELEPHONE: (404) 316-2896
E-MAIL: INFO@ALLARCHLLC.COM

REVISIONS	
NO.	DATE

COPYRIGHT
THIS DRAWING AND ALL REPRODUCTIONS ARE COPYRIGHTED AND THE PROPERTY OF ALL ARCHITECTURE, LLC AND MAY NOT BE USED IN ANY WAY WITHOUT THEIR PERMISSION.

PROJECT TITLE:
HAMILTON DENTAL
222 CHAMBLESS LN,
HAMILTON, GA 31811

STATE OF GEORGIA
JUAN CAMILO ARCHILA
6-2-23
CERTIFICATE NO. 12112
REGISTERED ARCHITECT

DRAWN: JLL	CHECKED: JCA
APPROVED: JCA	ISSUE DATE: 08/02/23

CAD FILE NAME: -

SHEET TITLE:
WALL SECTIONS AND DETAILS

PROJECT NUMBER: 22016

SHEET NO:
A411

SHEET OF

ISSUED FOR CONSTRUCTION

PLOT DATE: 12/11/2018 7:06:02 AM

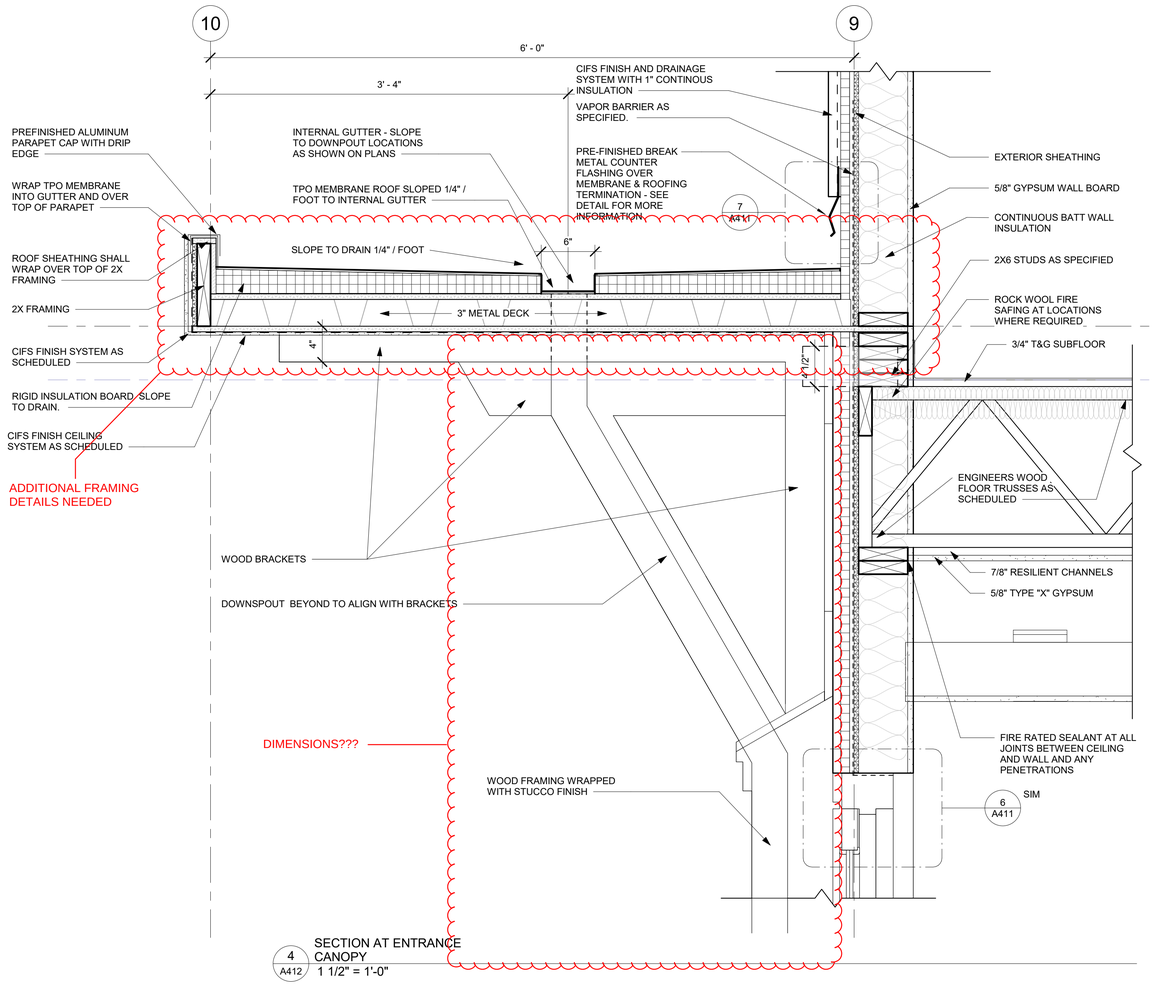

4 A412 SECTION AT ENTRANCE CANOPY
1 1/2" = 1'-0"

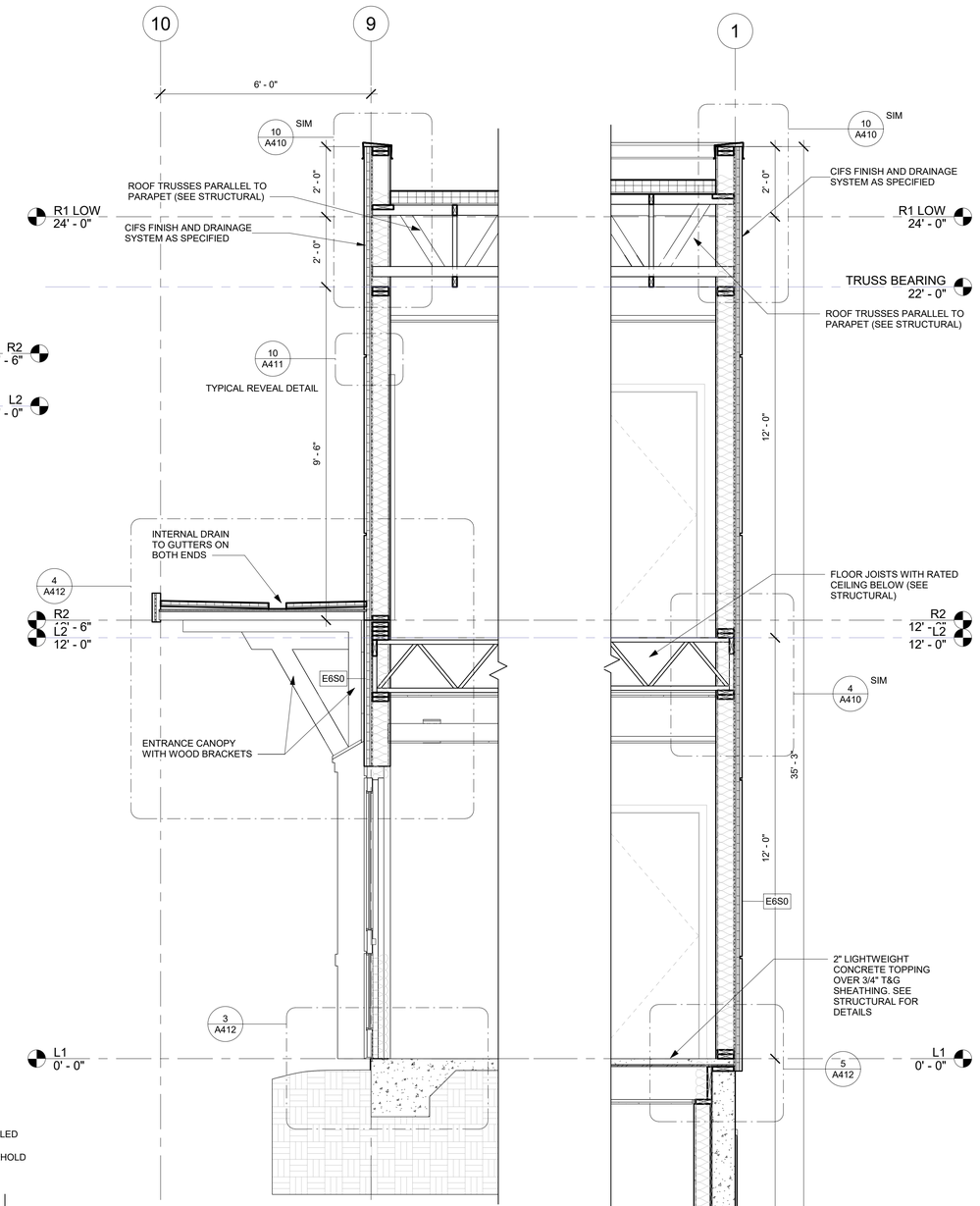

2 A412 SECTION AT MAIN ENTRANCE CANOPY
1/2" = 1'-0"

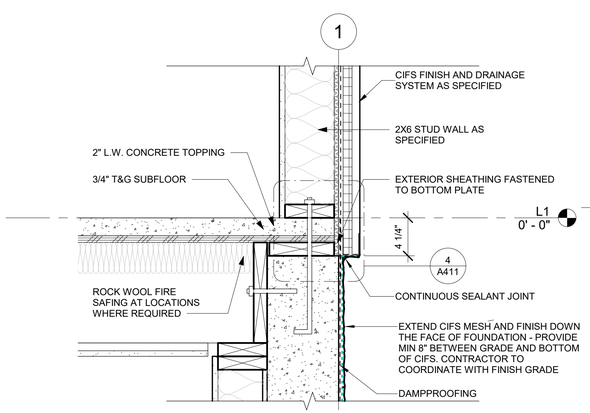

5 A412 SECTION AT BASEMENT TO FIRST FLOOR
1 1/2" = 1'-0"

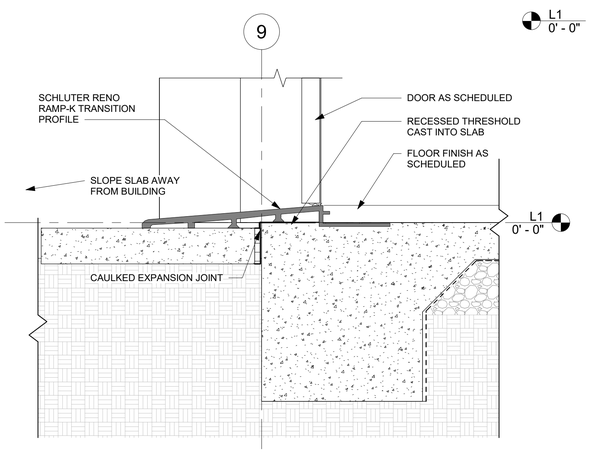

3 A412 SECTION AT ENTRANCE SILL
1 1/2" = 1'-0"

1 A412 W/E WALL SECTION AT BASEMENT
1/2" = 1'-0"

STROUD AND COMPANY
427 8th Street · Macon, Ga 31201
478-743-5097

ALL Architecture, LLC
2052 CHRYSLER DRIVE NE, ATLANTA, GA 30345
TELEPHONE: (404) 316-2896
E-MAIL: INFO@ALLARCHLLC.COM

REVISIONS	
NO.	DATE

COPYRIGHT
THIS DRAWING AND ALL REPRODUCTIONS ARE COPYRIGHTED AND THE PROPERTY OF ALL ARCHITECTURE, LLC AND MAY NOT BE USED IN ANY WAY WITHOUT THEIR PERMISSION.

PROJECT TITLE:
HAMILTON DENTAL
222 CHAMBLESS LN,
HAMILTON, GA 31811

STATE OF GEORGIA
JUAN CAMILO ARCHILA
8-2-23
CERTIFICATE NO. 12113
REGISTERED ARCHITECT

DRAWN: JLL	CHECKED: JCA
APPROVED: JCA	ISSUE DATE: 08/02/23

CAD FILE NAME: -

SHEET TITLE:
WALL SECTIONS AND DETAILS

PROJECT NUMBER: 22016

SHEET NO:
A412

SHEET OF

ISSUED FOR CONSTRUCTION

PLOT DATE: 12/11/2018 7:06:02 AM

FLOORING NOTES:

1. XX XX INDICATES TYPICAL FINISHES WITHIN ROOM U.N.O. SEE THIS SHEET FOR MATERIAL AND COLOR SCHEDULE.
2. ALL FLOOR COVERING MATERIALS TO BE INSTALLED PER MANUFACTURER'S STANDARD DETAILS AND SPECIFICATIONS. VERIFY W/ MANUFACTURER PRIOR TO INSTALLATION.
3. THE G.C. IS RESPONSIBLE FOR PROVIDING A SMOOTH LEVEL FLOOR SURFACE THAT MEETS THE MANUFACTURERS INSTALLATION SPECIFICATIONS PRIOR TO THE INSTALLATION OF ALL FLOORING MATERIALS. USE LEVELING COMPOUND UNDER TILE AND CARPET AREAS PER SPECIFICATIONS. PATCH/SHIM ALL AREAS AS NECESSARY SO THAT NEW FLOORING MEETS LEVEL WITH ALL OTHER FLOORING SURFACES MAX SLOPE OF 1:20.
4. THE FLOORING SUB-CONTRACTOR IS RESPONSIBLE FOR VERIFYING THAT THE CONDITION OF THE BASE FLOOR MEETS THE INSTALLATION SPECIFICATIONS PRIOR TO THE INSTALLATION OF THE NEW FLOORING MATERIAL.
5. ALL MATERIAL TRANSITIONS AT DOOR THRESHOLDS TO TAKE PLACE AT DOOR CENTERLINE
6. ALL MATERIAL TRANSITIONS AT OPENINGS SHALL TAKE PLACE AT THE LOCATIONS SHOWN ON THE PLAN.
7. ALL DIMENSIONS ARE TO CENTERLINE OF TRANSITION BETWEEN FLOORING MATERIALS OR FINISH COLOR OF SAME MATERIAL. PLANS DO NOT SHOW ALL TILES OF SAME MATERIALS. CONTRACTOR TO START TILES AT POINT AS INDICATED ON PLANS.

FINISH NOTES:

1. GENERAL CONTRACTOR SHALL BE RESPONSIBLE FOR PROPER PREPARATION OF ALL SURFACES IN A SATISFACTORY MANNER TO RECEIVE FINISHES. TOUCH-UP AND/OR REFINISH OF SURFACES DAMAGED BY SUBSEQUENT WORK SHALL BE THE RESPONSIBILITY OF THE GENERAL CONTRACTOR. ALL WORK SHALL BE PERFORMED IN CONFORMANCE WITH THE MANUFACTURER'S RECOMMENDED INSTALLATION METHODS. THE GENERAL CONTRACTOR SHALL PREPARE THE EXISTING FLOOR PRIOR TO THE APPLICATION OF FINISH FLOORING. THE EXISTING CONCRETE SLAB MUST BE SMOOTH AND LEVEL TO WITHIN A TOLERANCE OF ONE-EIGHTH INCH PER FOOT. LATEX CEMENT PATCHING COMPOUND SHALL BE UTILIZED (NO ASPHALT BASED COMPOUNDS).
2. ALL SURFACES WHICH ARE TO RECEIVE A PAINT FINISH SHALL BE PRIMED AND FINISHED IN ACCORDANCE WITH THE WRITTEN SPECIFICATIONS.
3. ALL JOINTS IN GYPSUM BOARD WALLS SHALL BE FINISHED WITH PAPER TAPE 2" WIDE AND THREE COATS OF VINYL, DRY OR PREMIXED JOINT COMPOUND. ALL OUTSIDE CORNERS SHALL BE FINISHED WITH METAL CORNER BEADS, TAPED AND SPACKLED. ALL AREAS TO BE PAINTED SHALL BE SANDED SMOOTH. JUST PRIOR TO THE APPLICATION OF THE FIRST COAT OF PAINT, WIPE SANDED SURFACES WITH A DAMP CLOTH IN ORDER TO LAY FLAT ANY NAP WHICH MAY HAVE FORMED IN SANDING.
4. THE PAINT CONTRACTOR SHALL REMOVE ALL HARDWARE, SWITCH COVERS, ETC. PRIOR TO PAINTING AND BE RESPONSIBLE FOR THE REINSTALLATION AFTER PAINTING IS COMPLETED.
5. FINISH FLOORING INSTALLATION SHALL BE IN CONFORMANCE WITH THE MANUFACTURER'S RECOMMENDED INSTALLATION GUIDELINES. COORDINATE THE INSTALLATION WITH OTHER TRADES, SUCH AS ELECTRICAL.
6. ALL JOINTS BETWEEN MATERIALS TO BE TIGHT AND CONSTRUCTED IN A NEAT WORKMANLIKE MANNER
7. ALL FINISHES SHALL BE TOUCHED UP TO CORRECT ANY IMPERFECTIONS AFTER INSTALLATION. FIXTURE CONTRACTOR SHALL PROVIDE TO THE GENERAL CONTRACTOR ALL MATERIALS FOR TOUCH UP WORK.
8. THE INTENT OF THE FINISH SPECIFICATION IS TO PROVIDE A SATISFACTORY FINISH TO ALL PARTS OF THE WORK. COVER ALL SURFACES THOROUGHLY. IF THE SPECIFIED NUMBER OF COATS DOES NOT ACCOMPLISH THE INTENT, THE GENERAL CONTRACTOR SHALL BE RESPONSIBLE FOR THE APPLICATION OF ADDITIONAL COATS OF THE SPECIFIED MATERIAL TO GIVESATISFACTORY COVERAGE, AT NO ADDITIONAL COST TO OWNER.
9. CLEAN ALL GLASS SURFACES WITH LIQUID GLASS CLEANER AT PROJECT COMPLETION.
10. PAINT ALL DOORS AND JAMBS, SEMI GLOSS IN COLOR TO MATCH ADJACENT FINISH, WHERE OCCURS, UNLESS NOTED OTHERWISE.
11. FLAT PAINT FINISH TO BE USED ON CEILINGS U.N.O.
12. SATIN PAINT FINISH TO BE USED ON ALL WALLS U.N.O.
13. SEMI-GLOSS PAINT FINISH TO BE USED ON ALL DOORS AND DOOR FRAMES U.N.O.
14. FIXTURE FABRICATOR AND G. C. TO FOLLOW ALL MANUFACTURER'S RECOMMENDED INSTALLATION AND MAINTENANCE PROCEDURES.
15. SEE THIS SHEET FOR TYPICAL TRANSITION DETAILS.

FINISH LEGEND

Code	Item	Description	Color	MFG List #	Remarks
ACT-1	Acoustical Ceiling Tile	Fine Fissured CeramaguardB # 605, 15/16" Square Lay-In, 24"x48", Unperforated, Suspension System to be Prelude XL Fire Guard	White, Suspension System to be White	2	Washable Kitchen Lay-In Tile
P-1	Paint	Sherwin Williams, Pro Classic Interior Paint	Sherwin Williams SW Big Chill	SW 7648	Flat, Latex
P-2	Paint	Sherwin Williams, Pro Classic Interior Paint	Sherwin Williams SW Smokey Azure	SW 9148	Accent Walls, exterior of exam rooms, will send diagram Flat latex
P-3	Paint	Sherwin Williams, Pro Classic Interior Paint	Sherwin Williams SW 200 % Big Chill	SW 7648	Semigloss trim paint 200%
RB-1	Rubber Base	Tarkett Johnsonite Traditional Wall Base	92 Blue Lagoon	A505-92	Rubber Base
WPCT	Weather Proof Carpet Tile	Weatherproof Carpet Tile	TBD		Entry Vestibule
CB-1	Ceramic Base	Merola Tivoli 12X24	Gray Matte		Floor tile cut horizontally for base
T-1	Ceramic Tile	Merola Tivoli 12X24	Gray Matte		Grout Custom Bldg Prod/ Prism / Driftwood #543
T-2	Wet Wall Tile	Speartek Castile ST-SKY3X12FRGL	Sky Frame 3X12 Glossy	ST-SKY3X12FRGL	Bathroom Wet Wall: Grout Custom Bldg Prod/ Prism Cape Gray Lay Stack Bond Pattern
T-3	Backsplash Tile	ISG Magnolia	Storm Glossy Hex		Prod/ Prism Cape Gray Lay Stack Bond Pattern
LVT-1	Luxury Vinyl Tile	LVT Shaw Contract Uncommon Ground	French Grey 02500	0188V-002500	8" LVT
CPT-1	Carpet	Shaw Contract Campus Carpet Tile	Cyan 23400	444674008	Asher Installation Method
ST	Trim for All tile	Schluter	100 TSBG	100 TSBG	To be used on all tile with exposed edges
VCT-1	Vinyl Composition Tile	VCT	Armstrong World industries VCT	51904- Sterling	Square Vinyl Tile 12X12
SC	Sealed Concrete	Concrete			Basement

WINDOW SILL

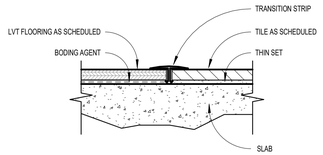

2 A500 LVT TO TILE
6" = 1'-0"

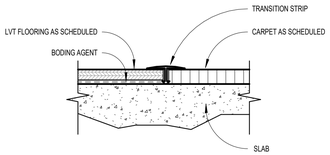

3 A500 CPT TO LVT
6" = 1'-0"

Finish Schedule

Room Number	Base	Floor	Wall	Ceiling	Notes	
1st Floor						
100	B-1	CPT-1	PT-1	ACT-1	Hallway	
101	B-1	LVT-1	PT-1,PT-2*	ACT-1	Exam	*Exterior Wall Accent
102	B-1	LVT-1	PT-1,PT-2*	ACT-1	Exam	*Exterior Wall Accent
103	B-1	LVT-1	PT-1,PT-2*	ACT-1	Exam	*Exterior Wall Accent
104	B-1	LVT-1	PT-1,PT-2*	ACT-1	Exam	*Exterior Wall Accent
105	B-1	LVT-1	PT-1,PT-2*	ACT-1	Exam	*Exterior Wall Accent
106	B-1	LVT-1	PT-1,PT-2*	ACT-1	Exam	*Accent wall TBD
107	CB-1	T-1	PT-1/ T-2	ACT-1	R/R	T-2 Wet Wall
108	B-1	CPT-1	PT-1	ACT-1	R/R Foyer	
109	B-1	LVT-1	PT-1	ACT-1	Janitor	
110	B-1	LVT-1	PT-1, PT-2*	ACT-1	Large Exam	*Accent wall TBD
111	B-1	LVT-1	PT-1,PT-2*	ACT-1	Exam	*Exterior Wall Accent
112	B-1	LVT-1	PT-1, PT-2*	ACT-1	Exam	*Exterior Wall Accent
113	B-1	LVT-1	PT-1, PT2*	ACT-1	Exam	*Exterior Wall Accent
114	B-1	LVT-1	PT-1, PT2*	ACT-1	Exam	*Exterior Wall Accent
115	B-1	LVT-1	PT-1, PT2*	ACT-1	Exam	*Exterior Wall Accent
116	B-1	LVT-1	PT-1, PT2*	ACT-1	Exam	*Exterior Wall Accent
117	B-1	LVT-1	PT-1	ACT-1	Desk	
118	B-1	LVT-1	PT-1	ACT-1	Storage	
119	B-1	LVT-1	PT-1	ACT-1	Sterilization	
120	B-1	LVT-1	PT-1	ACT-1	Lab	T-3 Backsplash
121	B-1	LVT-1	PT-1	ACT-1	R/R Foyer	
122	CB-1	T-1	PT-1/ T-2	ACT-1	R/R	T-2 Wet Wall
123	B-1	LVT-1	PT-1	ACT-1	Imaging	
124	B-1	CPT-1	PT-1	ACT-1	Manager	
125	B-1	LVT-1	PT-1	ACT-1	Print	
126	B-1	CPT-1	PT-1	ACT-1	Checkout	
127	B-1	CPT-1	PT-1	ACT-1	Reception	
128	B-1	CPT-1	PT-1	ACT-1	Bus. Office	
129	B-1	CPT-1	PT-1	ACT-1	Waiting 2	
130	B-1	CPT-1	PT-1, PT2*	ACT-1	Greeter	*PT2— behind Greeter wall
131	B-1	CPT-1	PT-1	ACT-1	Waiting 2	
132	B-1	WPCT	PT-1	ACT-1	Vestibule	
133	B-1	LVT-1	PT-1	ACT-1	Stairs	Rubber Treads TBD
134	B-1	LVT-1	PT-1	ACT-1	Single Desk	
2nd Floor						
200	B-1	CPT-1	PT-1	ACT-1	Hallway	
201	B-1	CPT-1	PT-1	ACT-1	Hallway	
202	B-1	CPT-1	PT-1	ACT-1	Training	
203	B-1	CPT-1	PT-1	ACT-1	Stairs	Rubber Treads TBD
204	B-1	CPT-1	PT-1, PT-2*	ACT-1	Practice Manager	*Exterior Wall PT-2
205	B-1	CPT-1	PT-1, PT-2*	ACT-1	Custodian	*Exterior Wall PT-2
206	B-1	CPT-1	PT-1, PT-2*	ACT-1	Insurance	*Exterior Wall PT-2
207	B-1	CPT-1	PT-1,PT-2*	ACT-1	Call Center	*Exterior Wall PT-2
208	B-1	CPT-1	PT-1, PT-2	ACT-1	Dentist Office	*Exterior Wall PT-2
209	B-1	CPT-1	PT-1, PT-2	ACT-1	Admin	*Exterior Wall PT-2
210	B-1	LVT-1	PT-1	ACT-1	Lab	T-3 Backsplash
211	CB-1	T-1	PT1/T-2	ACT-1	R/R	T-2 Wet Wall
212	CB-1	T-1	PT1/T-2	ACT-1	R/R	T-2 Wet Wall
213	B-1	CT-1	PT-1, PT-2	ACT-1	Ad. Office	*Exterior Wall PT-2
214	B-1	LVT-1	PT-1	ACT-1	Break Room	T-3 Backsplash
215	B-1	CPT-1	PT-1	ACT-1	Conference	
216	B-1	VCT	PT-1	ACT-1	Mechanical	
217	B-1	LVT-1	PT-1	ACT-1	IT	
218	B-1	LVT-1	PT-1	ACT-1	Laundry	
219	B-1	LVT-1	PT-1	ACT-1	Janitor	
220	B-1	LVT-1	PT-1	ACT-1	Lockers	
221	CB-1	T-1	PT1/T-2	ACT-1	Mens	*T1-Base cut in 1/2,
222	CB-1	T-1	PT1/T-2	ACT-1	Womens	Horizontally
Basement						
001	B-1	SC	PT-1	ACT-1	Vestibule	
002	B-1	SC	PT-1	ACT-1	Electrical	
003	B-1	SC	PT-1	ACT-1	Med Gas	
004	B-1	SC	PT-1	ACT-1	Vac Suction	
005	B-1	SC	PT-1	ACT-1	Storage	

STROUD AND COMPANY
427 8th Street · Macon, Ga 31201
478-743-5097

ALL Architecture, LLC
2052 CHRYSLER DRIVE NE, ATLANTA, GA 30345
TELEPHONE: (404) 316-2896
E-MAIL: INFO@ALLARCHLLC.COM

REVISIONS
NO. DATE

COPYRIGHT
THIS DRAWING AND ALL REPRODUCTIONS ARE COPYRIGHTED AND THE PROPERTY OF ALL ARCHITECTURE, LLC AND MAY NOT BE USED IN ANY WAY WITHOUT THEIR PERMISSION.

PROJECT TITLE:
HAMILTON DENTAL
222 CHAMBLESS LN,
HAMILTON, GA 31811

STATE OF GEORGIA
JUAN CAMILO ARCHILA
CERTIFICATE NO. 12110
REGISTERED ARCHITECT
6-2-23

DRAWN: JLL	CHECKED: JCA
APPROVED: JCA	ISSUE DATE: 08/02/23

CAD FILE NAME: -

SHEET TITLE:
FINISH SCHEDULES

PROJECT NUMBER: 22016

SHEET NO:
A500
SHEET OF

ISSUED FOR CONSTRUCTION

PLOT DATE: 12/11/2018 7:06:02 AM

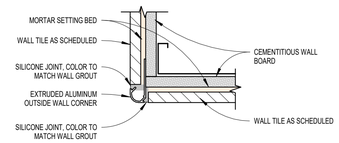

2 / A510 TILE - WALL OUTSIDE EDGE
6" = 1'-0"

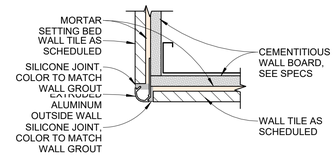

3 / A510 TILE - WALL AT OUTSIDE EDGE
6" = 1'-0"

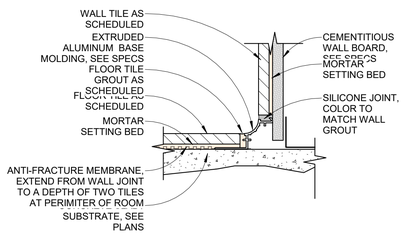

5 / A510 TILE - WALL TO FLOOR - BASE
6" = 1'-0"

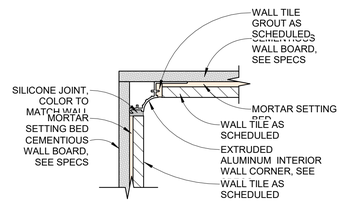

6 / A510 TILE - WALL TO WALL - INSIDE CORNER
6" = 1'-0"

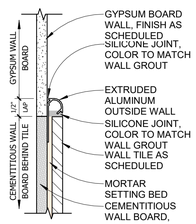

4 / A510 TILE - WALL TO GYP BOARD
6" = 1'-0"

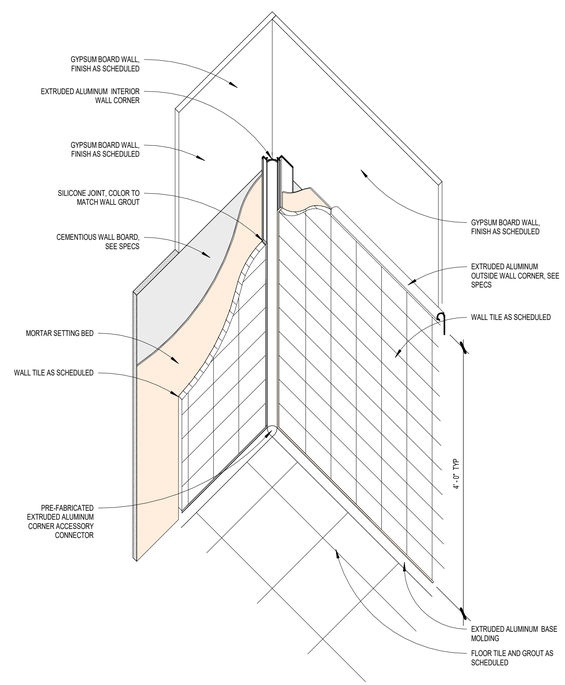

7 / A510 BATHROOM TILE - WALL & FLOOR DIAGRAM
3" = 1'-0"

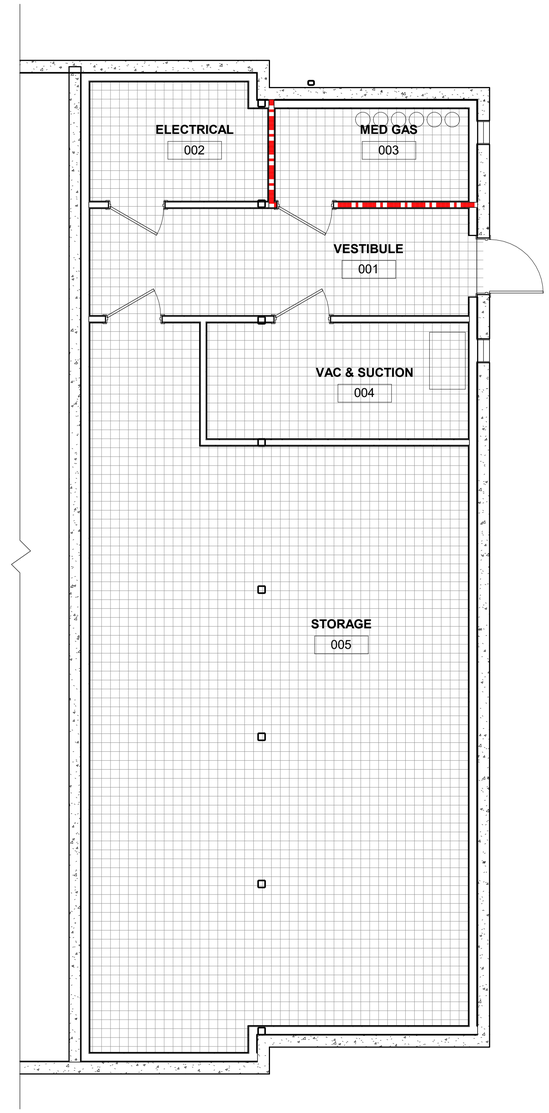

1 / A510 BASEMENT FINISH PLAN
1/4" = 1'-0"

FINISH MATERIAL LEGEND

SEALED CONCRETE

STROUD AND COMPANY
427 8th Street - Macon, Ga 31201
478-743-5097

ALL Architecture, LLC
2052 CHRYSLER DRIVE NE, ATLANTA, GA 30345
TELEPHONE: (404) 316-2896
E-MAIL: INFO@ALLARCHLLC.COM

REVISIONS

NO.	DATE

COPYRIGHT
THIS DRAWING AND ALL REPRODUCTIONS ARE COPYRIGHTED AND THE PROPERTY OF ALL ARCHITECTURE, LLC AND MAY NOT BE USED IN ANY WAY WITHOUT THEIR PERMISSION.

PROJECT TITLE:
HAMILTON DENTAL
222 CHAMBLESS LN,
HAMILTON, GA 31811

STATE OF GEORGIA
JUAN CAMILO ARCHILA
CERTIFICATE NO. 12113
REGISTERED ARCHITECT
8-2-23

DRAWN: JLL	CHECKED: JCA
APPROVED: JCA	ISSUE DATE: 08/02/23

CAD FILE NAME: -

SHEET TITLE:
BASEMENT FINISH PLAN

PROJECT NUMBER: 22016

SHEET NO:
A510

SHEET OF

ISSUED FOR CONSTRUCTION

PLOT DATE: 12/11/2018 7:06:02 AM

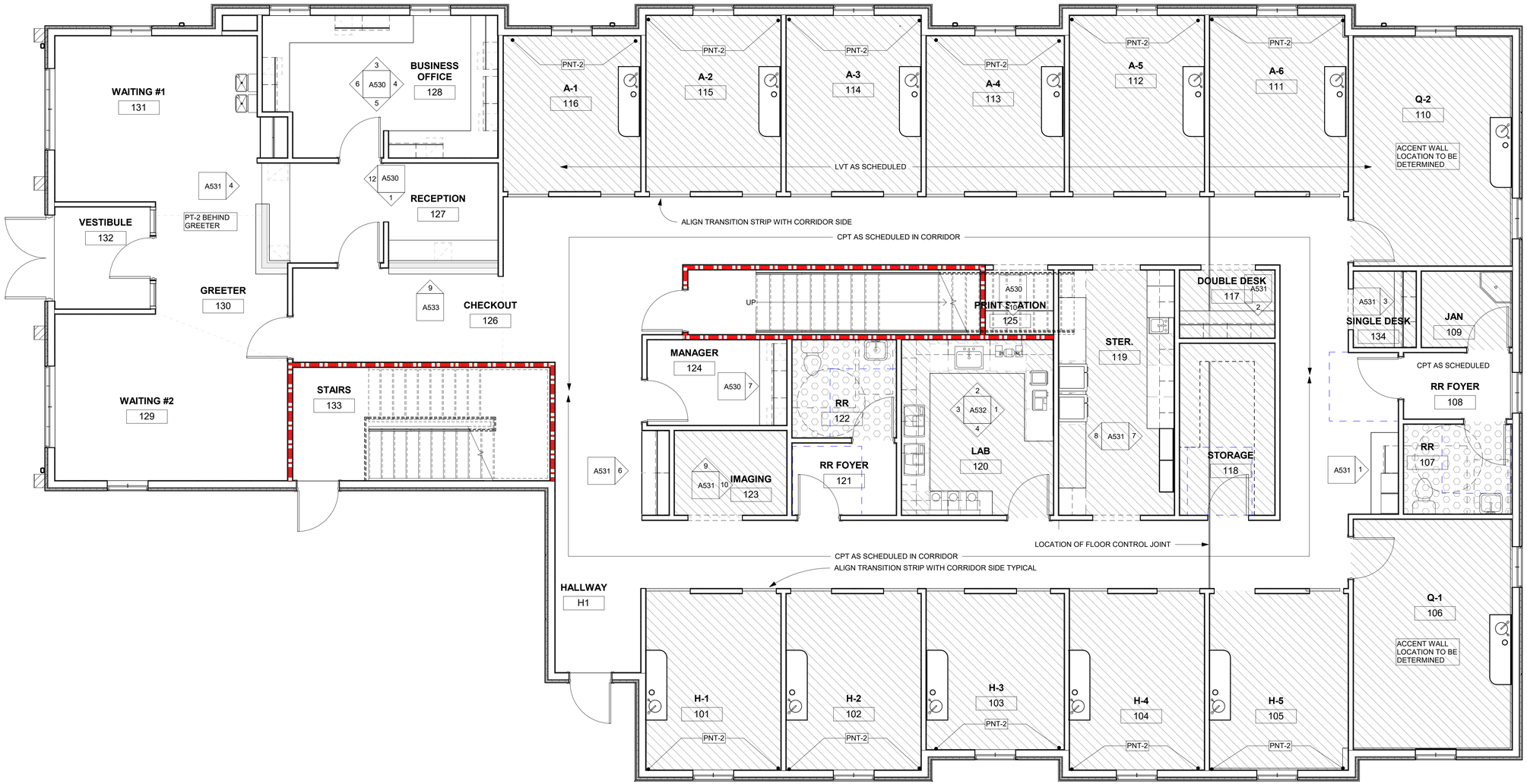

1 / A511 1ST FLOOR FINISH PLAN
1/4" = 1'-0"

FINISH MATERIAL LEGEND

- CARPET
- LVT
- TILE

STROUD AND COMPANY
427 8th Street · Macon, Ga 31201
478-743-5097

ALL Architecture, LLC
2052 CHRYSLER DRIVE NE, ATLANTA, GA 30345
TELEPHONE: (404) 316-2896
E-MAIL: INFO@ALLARCHLLC.COM

REVISIONS	
NO.	DATE

COPYRIGHT
THIS DRAWING AND ALL REPRODUCTIONS ARE COPYRIGHTED AND THE PROPERTY OF ALL ARCHITECTURE, LLC AND MAY NOT BE USED IN ANY WAY WITHOUT THEIR PERMISSION.

PROJECT TITLE:
HAMILTON DENTAL
222 CHAMBLESS LN,
HAMILTON, GA 31811

STATE OF GEORGIA
JUAN CAMILO ARCHILA
CERTIFICATE NO. 17173
REGISTERED ARCHITECT
8-2-23

DRAWN: JLL	CHECKED: JCA
APPROVED: JCA	ISSUE DATE: 08/02/23

CAD FILE NAME: -

SHEET TITLE:
1ST FLOOR FINISH PLAN

PROJECT NUMBER: 22016

SHEET NO:
A511

SHEET OF

ISSUED FOR CONSTRUCTION

PLOT DATE: 12/11/2018 7:06:02 AM

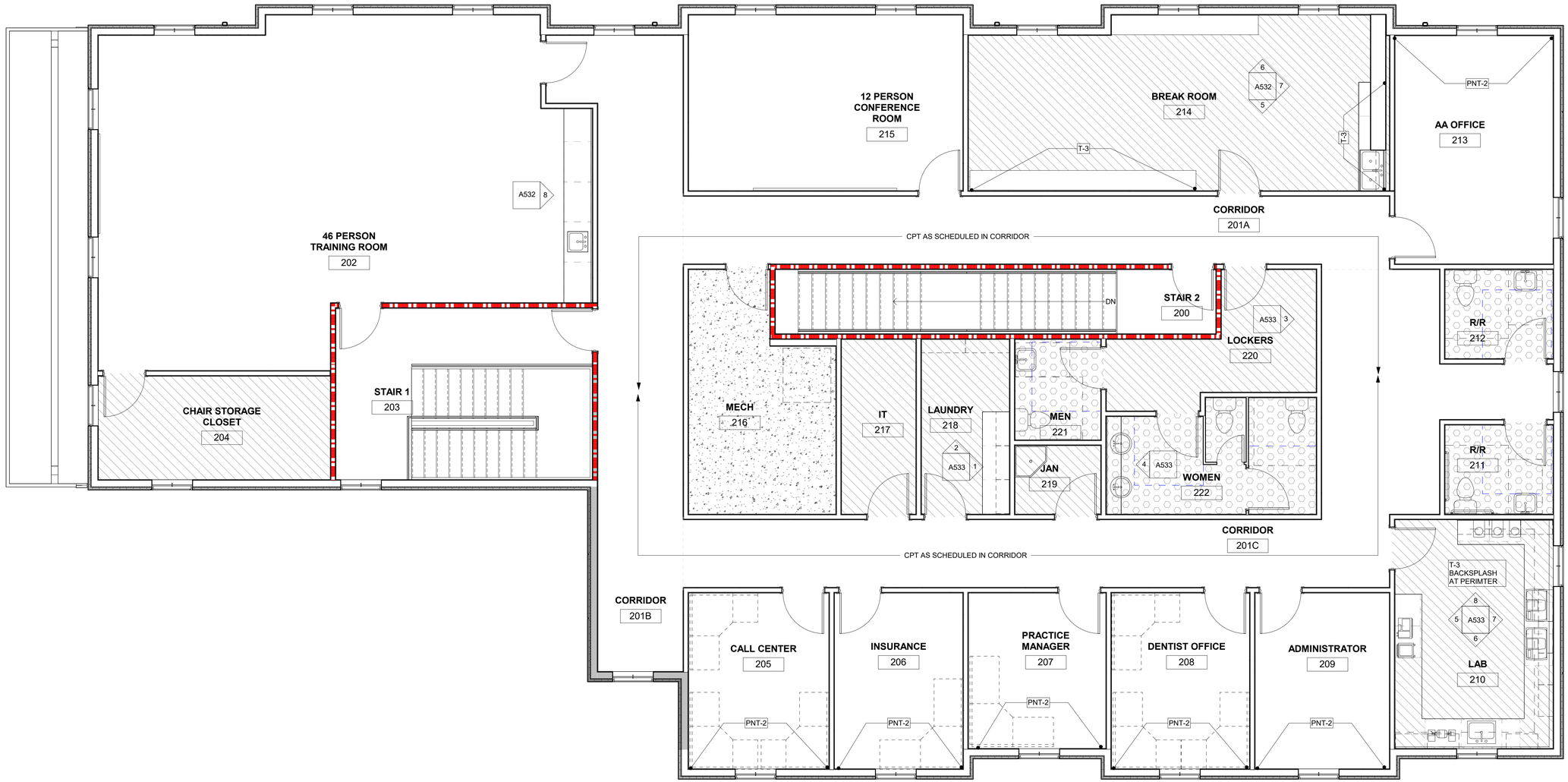

1 / A512 2ND FLOOR FINISH PLAN
1/4" = 1'-0"

FINISH MATERIAL LEGEND

- CARPET
- LVT
- TILE
- VCT

STROUD AND COMPANY
427 8th Street · Macon, Ga 31201
478-743-5097

ALL Architecture, LLC
2052 CHRYSLER DRIVE NE, ATLANTA, GA 30345
TELEPHONE: (404) 316-2896
E-MAIL: INFO@ALLARCHLLC.COM

REVISIONS

NO.	DATE

COPYRIGHT
THIS DRAWING AND ALL REPRODUCTIONS ARE COPYRIGHTED AND THE PROPERTY OF ALL ARCHITECTURE, LLC AND MAY NOT BE USED IN ANY WAY WITHOUT THEIR PERMISSION.

PROJECT TITLE:
HAMILTON DENTAL
222 CHAMBLESS LN,
HAMILTON, GA 31811

STATE OF GEORGIA
JUAN CAMILO ARCHILA
CERTIFICATE NO. 10119
REGISTERED ARCHITECT
8-2-23

DRAWN: JLL	CHECKED: JCA
APPROVED: JCA	ISSUE DATE: 08/02/23

CAD FILE NAME: -

SHEET TITLE:
2ND FLOOR FINISH PLAN

PROJECT NUMBER: 22016

SHEET NO:
A512

SHEET OF

ISSUED FOR CONSTRUCTION

PLOT DATE: 12/11/2018 7:06:02 AM

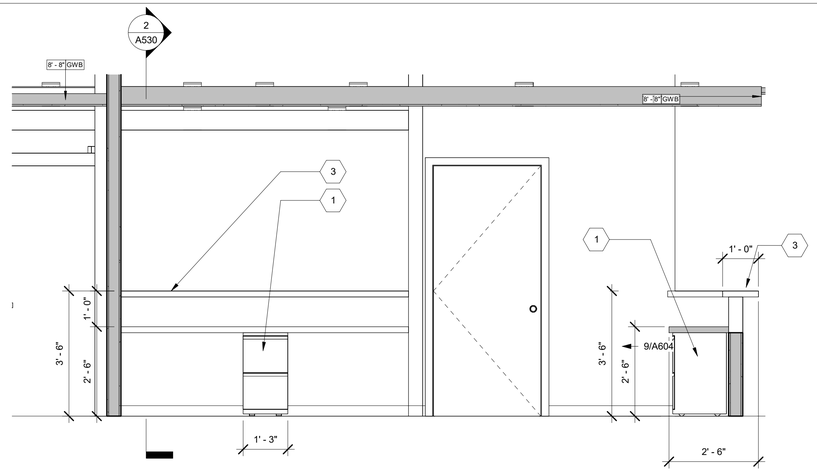

1 A530 ELEV AT CHECK-OUT (126-1)
1/2" = 1'-0"

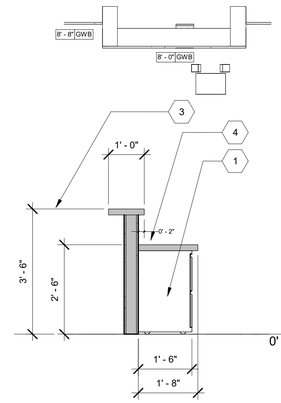

2 A530 SECTION AT CHECK OUT
1/2" = 1'-0"

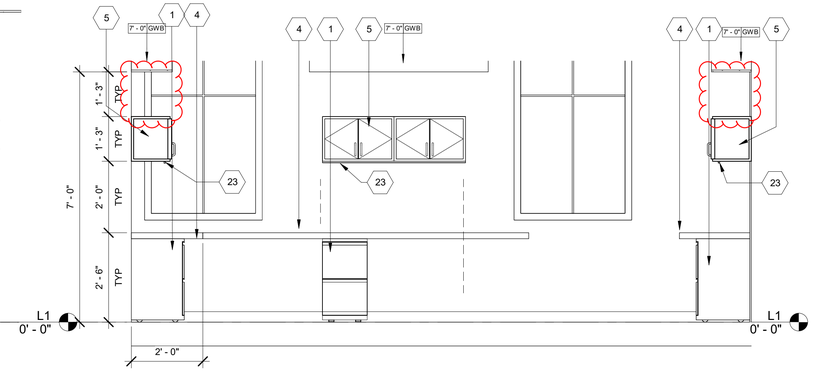

3 A530 ELEV 1 AT BUSINESS OFF (128)
1/2" = 1'-0"

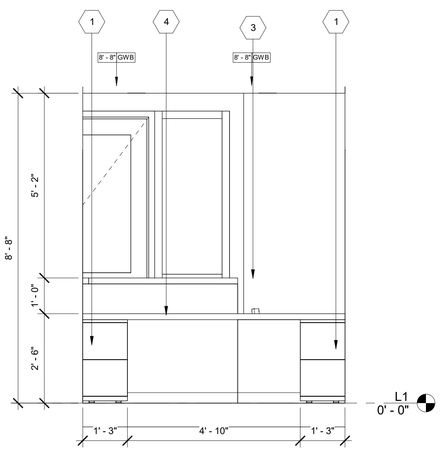

12 A530 ELEV AT RECEPTION 127
1/2" = 1'-0"

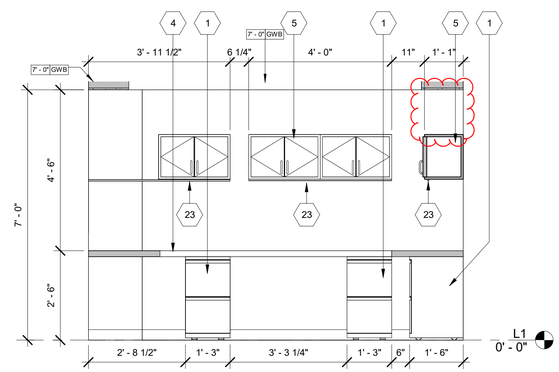

4 A530 ELEV 2 AT BUSINESS OFF (128)
1/2" = 1'-0"

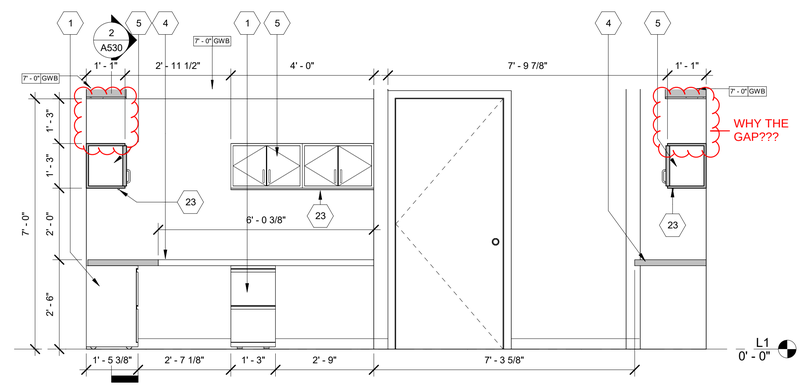

5 A530 ELEV 3 AT BUSINESS OFF (128)
1/2" = 1'-0"

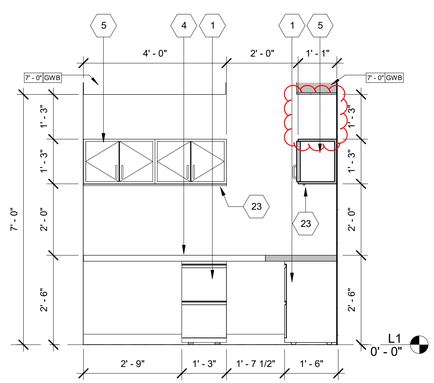

6 A530 ELEV 4 AT BUSINESS OFF (128)
1/2" = 1'-0"

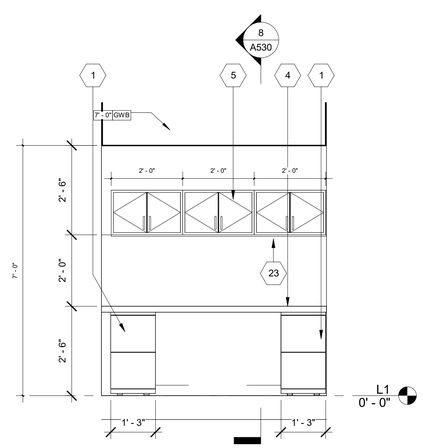

7 A530 ELEV AT MANAGER OFF. (124)
1/2" = 1'-0"

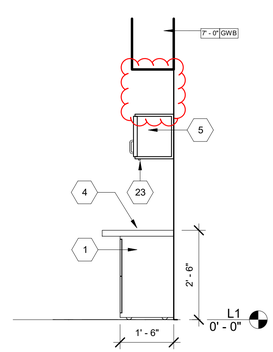

8 A530 SECTION AT MANAGER OFFICE
1/2" = 1'-0"

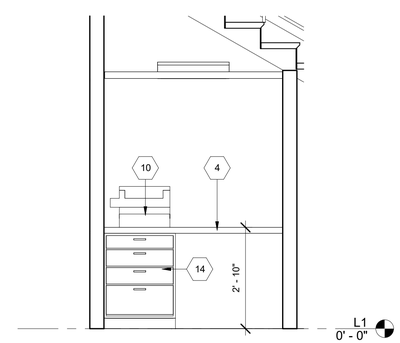

10 A530 ELEVATION AT 125
1/2" = 1'-0"

MILLWORK LEGEND

1. 15" x 18" x 28" BASE FILE CABINET
2. NOT USED
3. CUSTOMER COUNTER TOP
4. WORK COUNTER TOP
5. 24" x 13" x 15" OVERHEAD CABINET
6. 24" X 30" MIRROR - VERIFY W/ OWNER
7. 20 x 24 x 7'-0" ADJUSTABLE SHELVING
8. BAR SEAT BY OWNER
9. 18" x 15" x 9" OVERHEAD SELF
10, PRINTER BY OWNER
11. 36" BASE CABINET
12. 36" BASE CABINET WITH (2) DRAWER
13. 18" X 18" KITCHEN SINK
14. (4) DRAWERS BASE CABINET
15. UNDER COUNTER REFRIGERATOR BY OWNER
16. REFRIGERATOR BY OWNER
17. MICROWAVE BY OWNER
18. 30" BASE CABINET WITH (2) DRAWER
19. 42"' X 21" KITCHEN DOUBLE SINK
20. 36" UPPER CABINET DOUBLE DOOR
21. 30" UPPER CABINET DOUBLE DOOR
22. 39" UPPER CABINET DOUBLE DOOR
23. VALANCE LIGHT
24. 12" (5) TIER METAL LOCKERS BY OWNER
25. WORK STATION CUBICLE
26. 30" ADA BASE CABINET WITH (2) DRAWER
27. 36" ADA BASE CABINET
28. 36" ADA BASE CABINET WITH (2) DRAWER
29. GLASS SHELF
30. GLASS DOOR AT DISPLAY NOOK
31. 36" ADA NOOK CABINET
32. 37" NOOK WALL CABINET
33. 37" NOOK BASE CABINET
34. WASHER FRONT LOAD 27" BY OWNER
35. DRYER FRONT LOAD 27" BY OWNER
36. ADA COUNTER-TOP
37. 21" x 13" x 15" OVERHEAD CABINET
38. 22" x 13" x 15" OVERHEAD CABINET
39. OPEN CABINET

SCHEIN - REFER TO VENDOR DRAWINGS

S8	STERILIZ. M.R. TOWER BY DENTAL VENDOR
S13	28X23X13 INSPIRE WALL-MOUNTED CABINET
S14	UPPER STORAGE CABINET
S18	STERILIZATION BY VENDOR
S22	STERILE MODULE 24"
S35	QUARTZ COUNTERTOP
S41	STAINLESS STEEL SINK
S44	BASE CABINET - REFER TO VENDOR LAYOUT

NOTES:

A. VALANCE LIGHT AT ALL OVERHEAD CABINETS

B. FIELD VERIFY ALL DIMENSIONS, TYPICAL

STROUD AND COMPANY
427 8th Street · Macon, Ga 31201
478-743-5097

ALL Architecture, LLC
2052 CHRYSLER DRIVE NE, ATLANTA, GA 30345
TELEPHONE: (404) 316-2896
E-MAIL: INFO@ALLARCHLLC.COM

REVISIONS

NO.	DATE

COPYRIGHT
THIS DRAWING AND ALL REPRODUCTIONS ARE COPYRIGHTED AND THE PROPERTY OF ALL ARCHITECTURE, LLC AND MAY NOT BE USED IN ANY WAY WITHOUT THEIR PERMISSION.

PROJECT TITLE:

HAMILTON DENTAL

222 CHAMBLESS LN,
HAMILTON, GA 31811

STATE OF GEORGIA
JUAN CAMILO ARCHILA
CERTIFICATE NO. 12113
REGISTERED ARCHITECT
8-2-23

DRAWN: JLL	CHECKED: JCA
APPROVED: JCA	ISSUE DATE: 08/02/23

CAD FILE NAME: -

SHEET TITLE:

INTERIOR ELEVATIONS

PROJECT NUMBER: 22016

SHEET NO:

A530

SHEET OF

ISSUED FOR CONSTRUCTION

PLOT DATE: 12/11/2018 7:06:02 AM

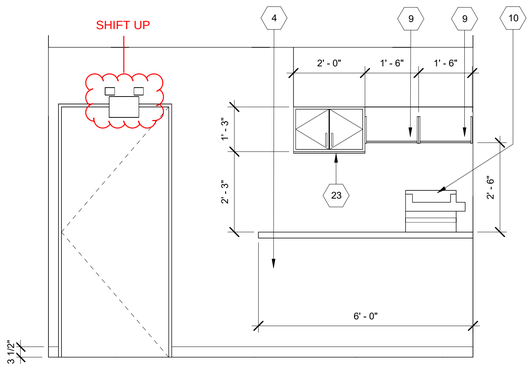

1 A531 ELEV AT HALL PRINT ST 100
1/2" = 1'-0"

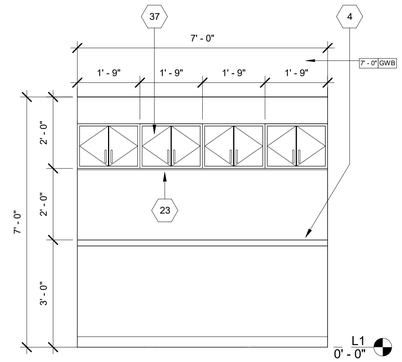

2 A531 ELEV AT DOUBLE DESK 117
1/2" = 1'-0"

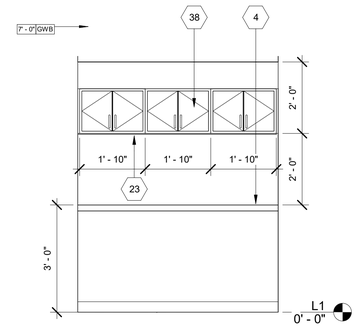

3 A531 ELEV AT SINGLE DESK 134
1/2" = 1'-0"

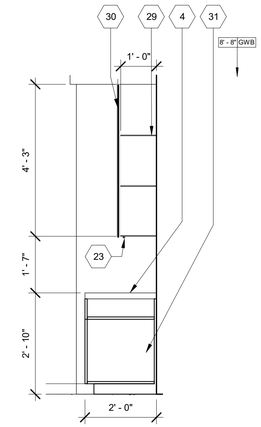

5 A531 SECTION AT DISPLAY NOOK 131
1/2" = 1'-0"

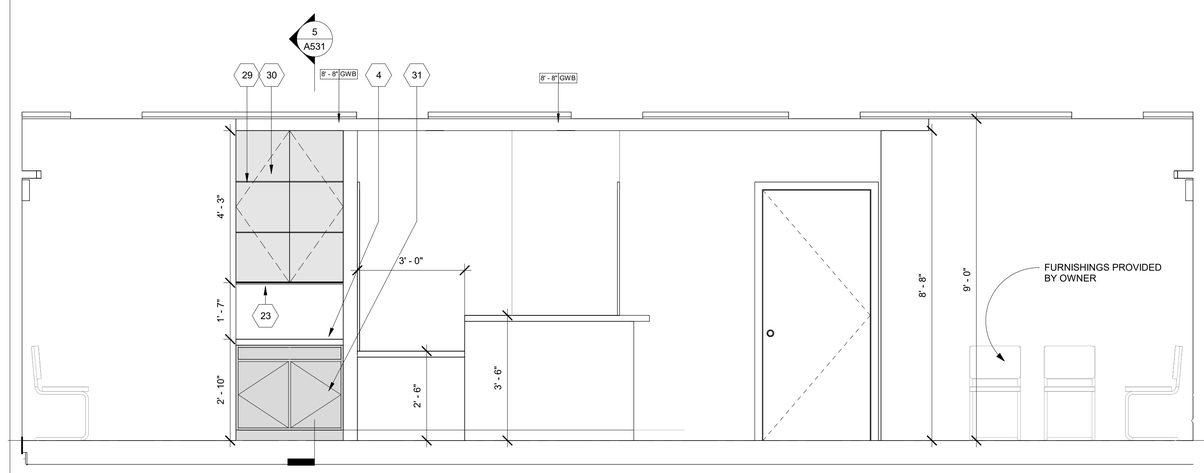

4 A531 ELEV AT DISPLAY NOOK 131
1/2" = 1'-0"

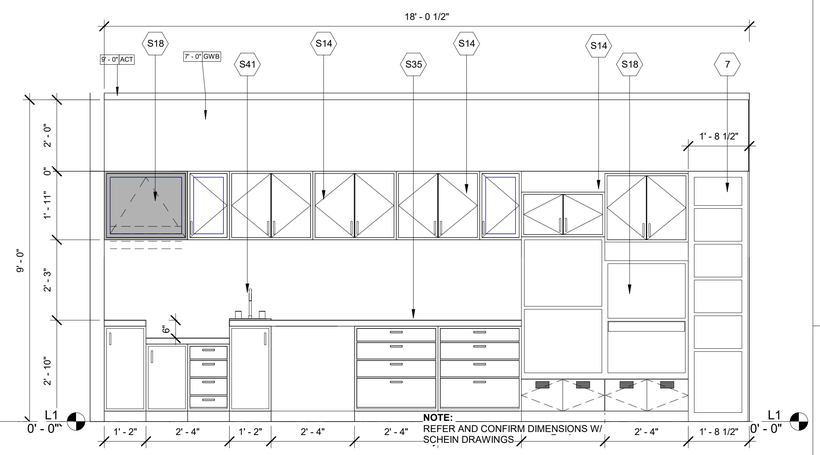

NOTE:
REFER AND CONFIRM DIMENSIONS W/
SCHEIN DRAWINGS

7 A531 ELEV AT STER. 119-1
1/2" = 1'-0"

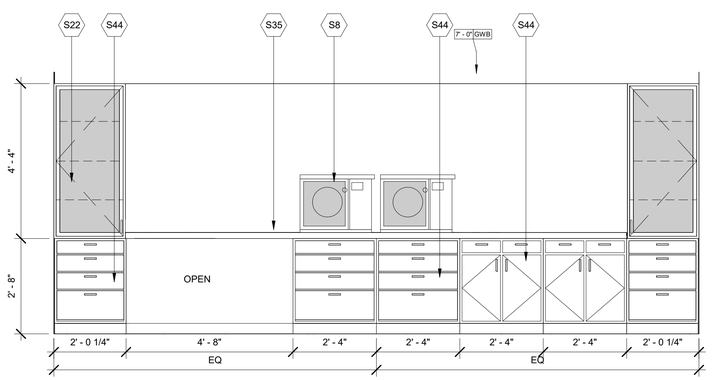

8 A531 ELEV AT STERILIZATION
1/2" = 1'-0"

NOTE:
REFER AND CONFIRM DIMENSIONS W/
SCHEIN DRAWINGS

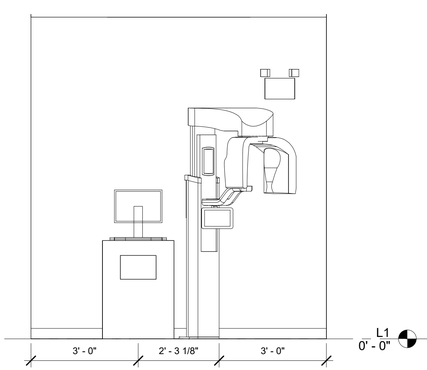

9 A531 ELEV AT IMAGING 123
1/2" = 1'-0"

NOTE:
REFER AND CONFIRM DIMENSIONS W/
SCHEIN DRAWINGS

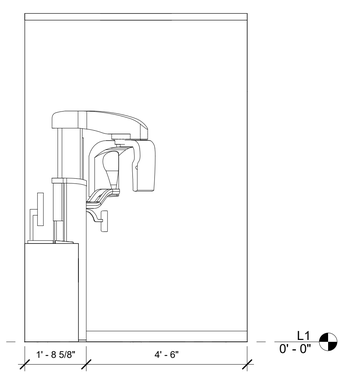

10 A531 ELEV AT IMAGING 123
1/2" = 1'-0"

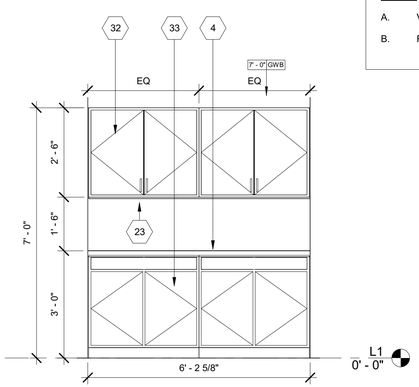

6 A531 ELEV AT HALL WAY NOOK 100
1/2" = 1'-0"

MILLWORK LEGEND

1. 15" x 18" x 28" BASE FILE CABINET
2. NOT USED
3. CUSTOMER COUNTER TOP
4. WORK COUNTER TOP
5. 24" x 13" x 15" OVERHEAD CABINET
6. 24" X 30" MIRROR - VERIFY W/ OWNER
7. 20 x 24 x 7'-0" ADJUSTABLE SHELVING
8. BAR SEAT BY OWNER
9. 18" x 15" x 9" OVERHEAD SELF
10, PRINTER BY OWNER
11. 36" BASE CABINET
12. 36" BASE CABINET WITH (2) DRAWER
13. 18" X 18" KITCHEN SINK
14. (4) DRAWERS BASE CABINET
15. UNDER COUNTER REFRIGERATOR BY OWNER
16. REFRIGERATOR BY OWNER
17. MICROWAVE BY OWNER
18. 30" BASE CABINET WITH (2) DRAWER
19. 42"' X 21" KITCHEN DOUBLE SINK
20. 36" UPPER CABINET DOUBLE DOOR
21. 30" UPPER CABINET DOUBLE DOOR
22. 39" UPPER CABINET DOUBLE DOOR
23. VALANCE LIGHT
24. 12" (5) TIER METAL LOCKERS BY OWNER
25. WORK STATION CUBICLE
26. 30" ADA BASE CABINET WITH (2) DRAWER
27. 36" ADA BASE CABINET
28. 36" ADA BASE CABINET WITH (2) DRAWER
29. GLASS SHELF
30. GLASS DOOR AT DISPLAY NOOK
31. 36" ADA NOOK CABINET
32. 37" NOOK WALL CABINET
33. 37" NOOK BASE CABINET
34. WASHER FRONT LOAD 27" BY OWNER
35. DRYER FRONT LOAD 27" BY OWNER
36. ADA COUNTER-TOP
37. 21" x 13" x 15" OVERHEAD CABINET
38. 22" x 13" x 15" OVERHEAD CABINET
39. OPEN CABINET

SCHEIN - REFER TO VENDOR DRAWINGS

S8	STERILIZ. M.R. TOWER BY DENTAL VENDOR
S13	28X23X13 INSPIRE WALL-MOUNTED CABINET
S14	UPPER STORAGE CABINET
S18	STERILIZATION BY VENDOR
S22	STERILE MODULE 24"
S35	QUARTZ COUNTERTOP
S41	STAINLESS STEEL SINK
S44	BASE CABINET - REFER TO VENDOR LAYOUT

NOTES:

A. VALANCE LIGHT AT ALL OVERHEAD CABINETS

B. FIELD VERIFY ALL DIMENSIONS, TYPICAL

STROUD AND COMPANY
427 8th Street · Macon, Ga 31201
478-743-5097

ALL Architecture, LLC
2052 CHRYSLER DRIVE NE, ATLANTA, GA 30345
TELEPHONE: (404) 316-2896
E-MAIL: INFO@ALLARCHLLC.COM

REVISIONS

NO.	DATE

COPYRIGHT
THIS DRAWING AND ALL REPRODUCTIONS ARE COPYRIGHTED AND THE PROPERTY OF ALL ARCHITECTURE, LLC AND MAY NOT BE USED IN ANY WAY WITHOUT THEIR PERMISSION.

PROJECT TITLE:

HAMILTON DENTAL

222 CHAMBLESS LN,
HAMILTON, GA 31811

STATE OF GEORGIA
JUAN CAMILO ARCHILA
CERTIFICATE NO. 12116
8-2-23
REGISTERED ARCHITECT

DRAWN: JLL	CHECKED: JCA
APPROVED: JCA	ISSUE DATE: 08/02/23

CAD FILE NAME: -

SHEET TITLE:

INTERIOR ELEVATIONS

PROJECT NUMBER: 22016

SHEET NO:

A531

SHEET OF

ISSUED FOR CONSTRUCTION

PLOT DATE: 12/11/2018 7:06:02 AM

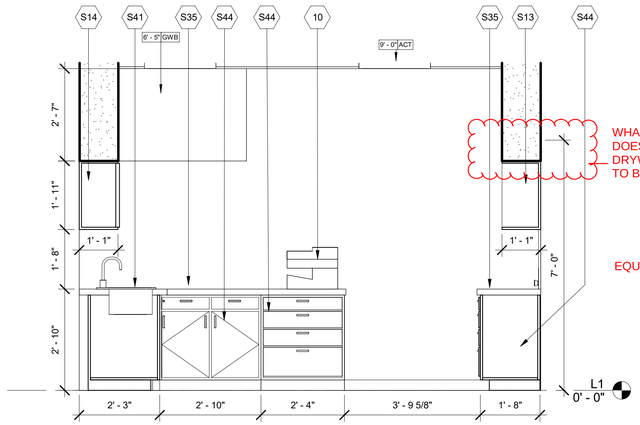

1 / A532 ELEV AT LAB 120-1
1/2" = 1'-0"

NOTE:
REFER AND CONFIRM DIMENSIONS W/ SCHEIN DRAWINGS

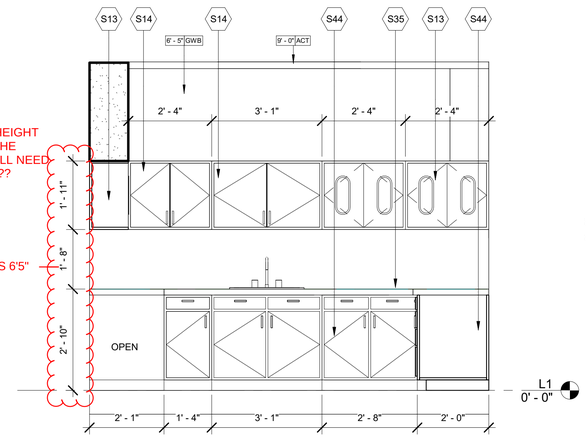

2 / A532 ELEV AT LAB 120-2
1/2" = 1'-0"

NOTE:
REFER AND CONFIRM DIMENSIONS W/ SCHEIN DRAWINGS

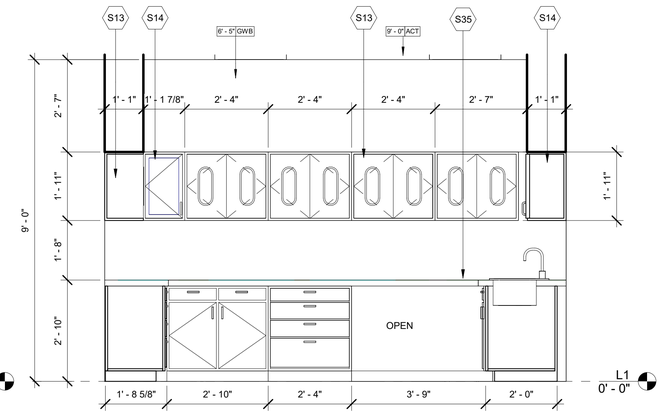

3 / A532 ELEV AT LAB 120-3
1/2" = 1'-0"

NOTE:
REFER AND CONFIRM DIMENSIONS W/ SCHEIN DRAWINGS

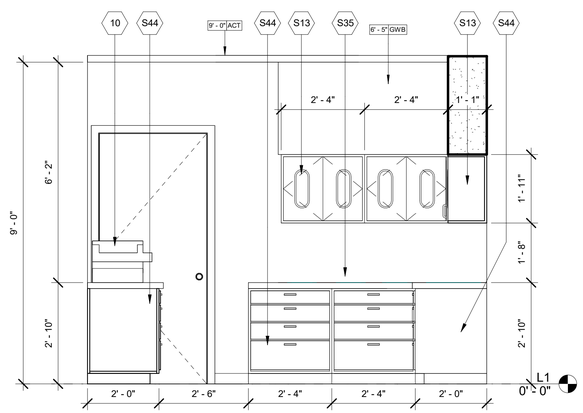

4 / A532 ELEV AT LAB 120-4
1/2" = 1'-0"

NOTE:
REFER AND CONFIRM DIMENSIONS W/ SCHEIN DRAWINGS

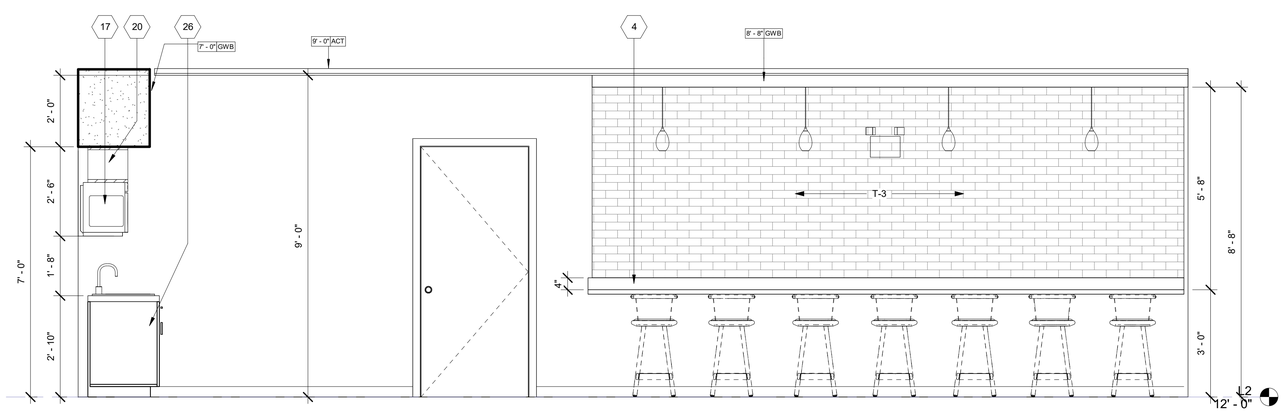

5 / A532 ELEV AT BREAKROOM 214-1
1/2" = 1'-0"

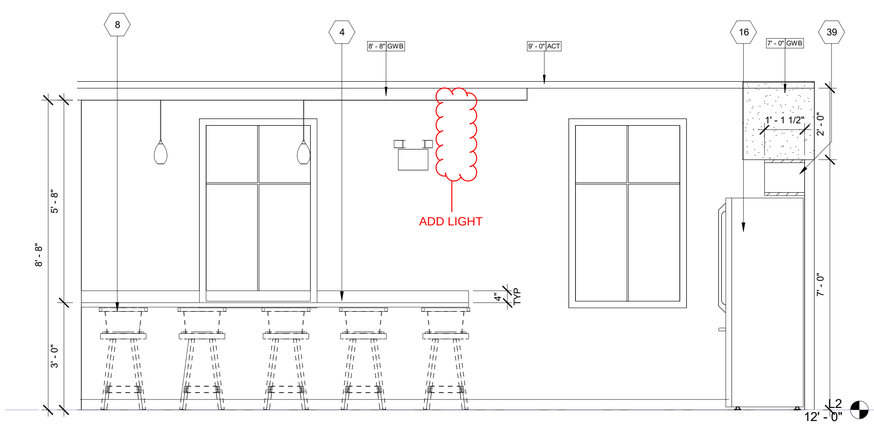

6 / A532 ELEV AT BREAKROOM 214-2
1/2" = 1'-0"

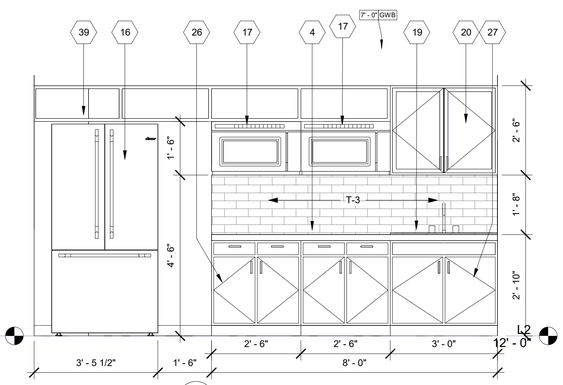

7 / A532 ELEV AT BREAKROOM 214-3
1/2" = 1'-0"

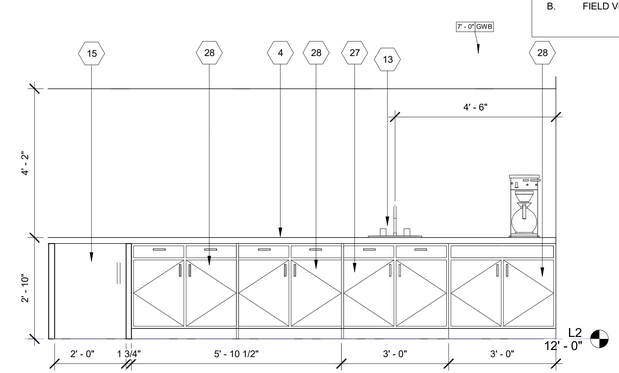

8 / A532 ELEV. AT REFR CENTER 202
1/2" = 1'-0"

MILLWORK LEGEND

1. 15" x 18" x 28" BASE FILE CABINET
2. NOT USED
3. CUSTOMER COUNTER TOP
4. WORK COUNTER TOP
5. 24" x 13" x 15" OVERHEAD CABINET
6. 24" X 30" MIRROR - VERIFY W/ OWNER
7. 20 x 24 x 7'-0" ADJUSTABLE SHELVING
8. BAR SEAT BY OWNER
9. 18" x 15" x 9" OVERHEAD SELF
10, PRINTER BY OWNER
11. 36" BASE CABINET
12. 36" BASE CABINET WITH (2) DRAWER
13. 18" X 18" KITCHEN SINK
14. (4) DRAWERS BASE CABINET
15. UNDER COUNTER REFRIGERATOR BY OWNER
16. REFRIGERATOR BY OWNER
17. MICROWAVE BY OWNER
18. 30" BASE CABINET WITH (2) DRAWER
19. 42"" X 21" KITCHEN DOUBLE SINK
20. 36" UPPER CABINET DOUBLE DOOR
21. 30" UPPER CABINET DOUBLE DOOR
22. 39" UPPER CABINET DOUBLE DOOR
23. VALANCE LIGHT
24. 12" (5) TIER METAL LOCKERS BY OWNER
25. WORK STATION CUBICLE
26. 30" ADA BASE CABINET WITH (2) DRAWER
27. 36" ADA BASE CABINET
28. 36" ADA BASE CABINET WITH (2) DRAWER
29. GLASS SHELF
30. GLASS DOOR AT DISPLAY NOOK
31. 36" ADA NOOK CABINET
32. 37" NOOK WALL CABINET
33. 37" NOOK BASE CABINET
34. WASHER FRONT LOAD 27" BY OWNER
35. DRYER FRONT LOAD 27" BY OWNER
36. ADA COUNTER-TOP
37. 21" x 13" x 15" OVERHEAD CABINET
38. 22" x 13" x 15" OVERHEAD CABINET
39. OPEN CABINET

SCHEIN - REFER TO VENDOR DRAWINGS

S8	STERILIZ. M.R. TOWER BY DENTAL VENDOR
S13	28X23X13 INSPIRE WALL-MOUNTED CABINET
S14	UPPER STORAGE CABINET
S18	STERILIZATION BY VENDOR
S22	STERILE MODULE 24"
S35	QUARTZ COUNTERTOP
S41	STAINLESS STEEL SINK
S44	BASE CABINET - REFER TO VENDOR LAYOUT

NOTES:

A. VALANCE LIGHT AT ALL OVERHEAD CABINETS

B. FIELD VERIFY ALL DIMENSIONS, TYPICAL

STROUD AND COMPANY
427 8th Street · Macon, Ga 31201
478-743-5097

ALL Architecture, LLC
2052 CHRYSLER DRIVE NE, ATLANTA, GA 30345
TELEPHONE: (404) 316-2896
E-MAIL: INFO@ALLARCHLLC.COM

REVISIONS

NO.	DATE

COPYRIGHT
THIS DRAWING AND ALL REPRODUCTIONS ARE COPYRIGHTED AND THE PROPERTY OF ALL ARCHITECTURE, LLC AND MAY NOT BE USED IN ANY WAY WITHOUT THEIR PERMISSION.

PROJECT TITLE:

HAMILTON DENTAL

222 CHAMBLESS LN,
HAMILTON, GA 31811

STATE OF GEORGIA
JUAN CAMILO ARCHILA
CERTIFICATE NO. 12119
6-2-23
REGISTERED ARCHITECT

DRAWN: JLL	CHECKED: JCA
APPROVED: JCA	ISSUE DATE: 08/02/23

CAD FILE NAME: -

SHEET TITLE:

INTERIOR ELEVATIONS

PROJECT NUMBER: 22016

SHEET NO:

A532

SHEET OF

ISSUED FOR CONSTRUCTION

PLOT DATE: 12/11/2018 7:06:02 AM

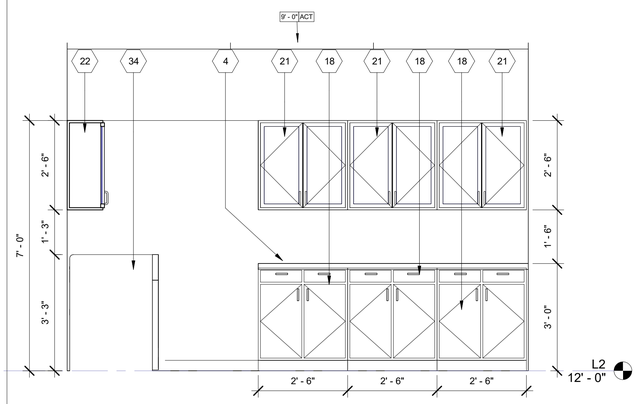

1 A533 ELEV AT LAUNDRY 218-1
1/2" = 1'-0"

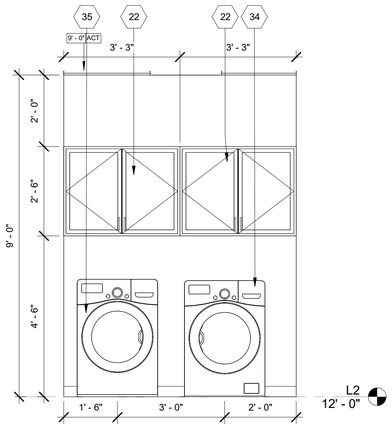

2 A533 ELEV AT LAUNDRY 218-2
1/2" = 1'-0"

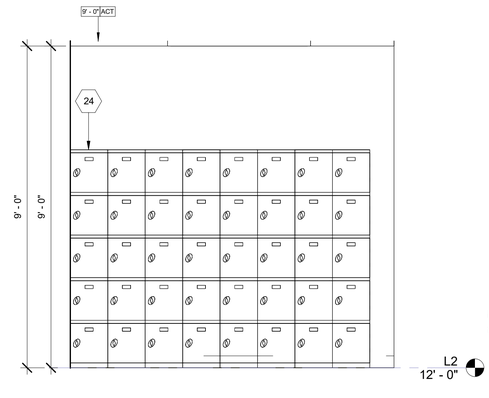

3 A533 ELEV. AT LOCKERS 220
1/2" = 1'-0"

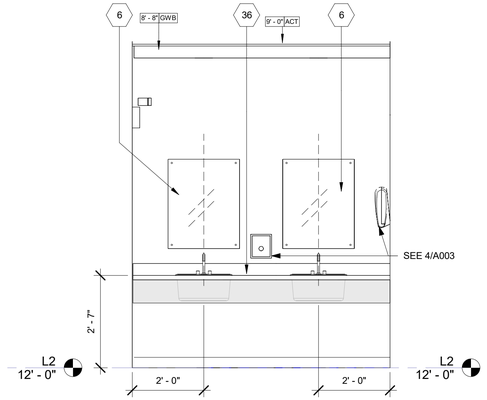

4 A533 ELEV AT W R/R 222
1/2" = 1'-0"

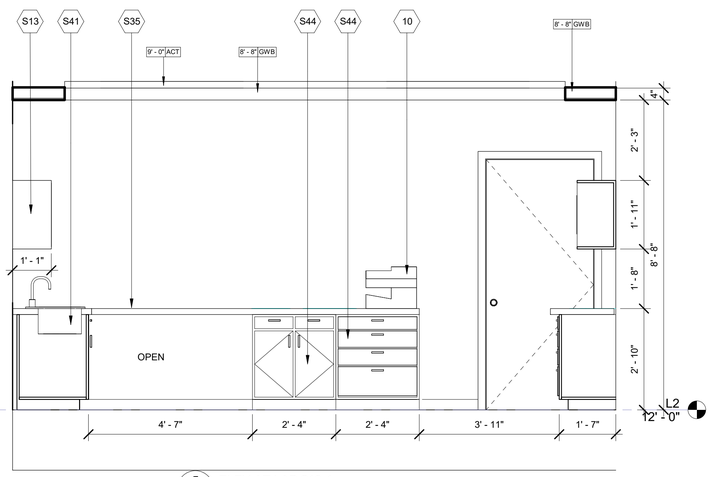

5 A533 ELEV AT LAB 210-1
1/2" = 1'-0"

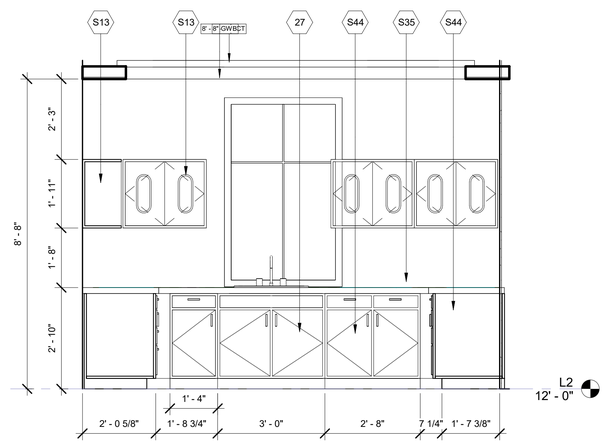

6 A533 ELEV AT LAB 210-2
1/2" = 1'-0"

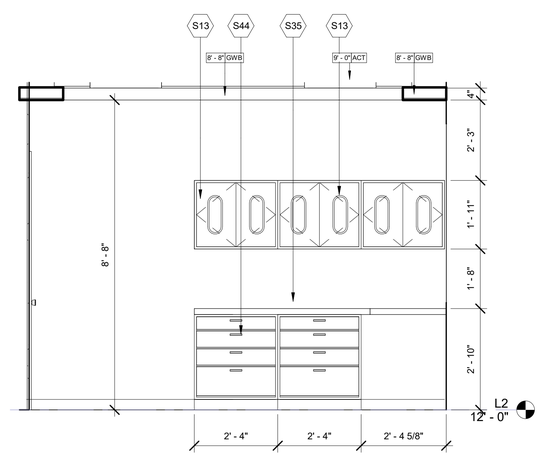

8 A533 ELEV AT LAB 210-4
1/2" = 1'-0"

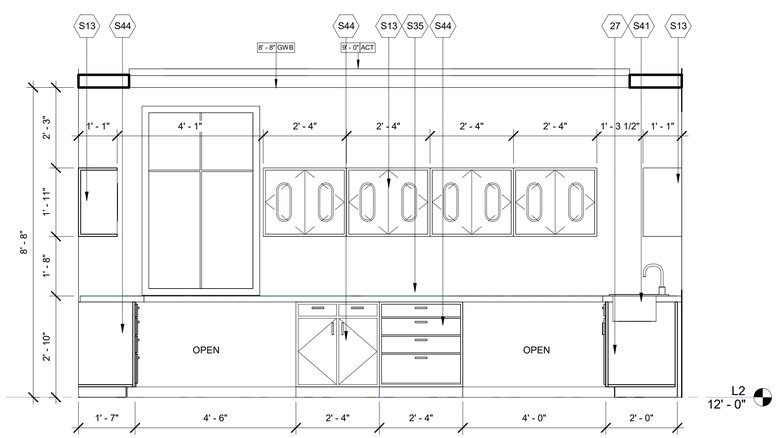

7 A533 ELEV AT LAB 210-3
1/2" = 1'-0"

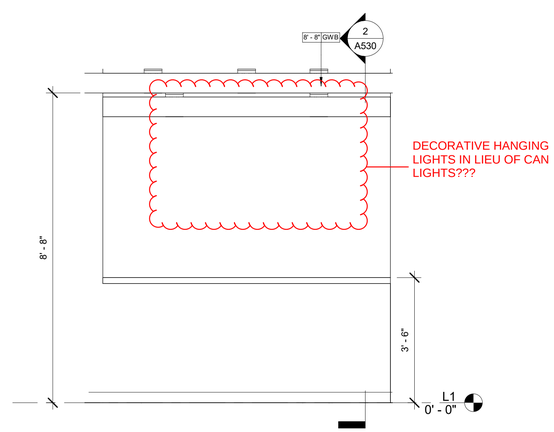

9 A533 ELEV AT CHECK-OUT (126-2)
1/2" = 1'-0"

MILLWORK LEGEND

1. 15" x 18" x 28" BASE FILE CABINET
2. NOT USED
3. CUSTOMER COUNTER TOP
4. WORK COUNTER TOP
5. 24" x 13" x 15" OVERHEAD CABINET
6. 24" X 30" MIRROR - VERIFY W/ OWNER
7. 20 x 24 x 7'-0" ADJUSTABLE SHELVING
8. BAR SEAT BY OWNER
9. 18" x 15" x 9" OVERHEAD SELF
10, PRINTER BY OWNER
11. 36" BASE CABINET
12. 36" BASE CABINET WITH (2) DRAWER
13. 18" X 18" KITCHEN SINK
14. (4) DRAWERS BASE CABINET
15. UNDER COUNTER REFRIGERATOR BY OWNER
16. REFRIGERATOR BY OWNER
17. MICROWAVE BY OWNER
18. 30" BASE CABINET WITH (2) DRAWER
19. 42"' X 21" KITCHEN DOUBLE SINK
20. 36" UPPER CABINET DOUBLE DOOR
21. 30" UPPER CABINET DOUBLE DOOR
22. 39" UPPER CABINET DOUBLE DOOR
23. VALANCE LIGHT
24. 12" (5) TIER METAL LOCKERS BY OWNER
25. WORK STATION CUBICLE
26. 30" ADA BASE CABINET WITH (2) DRAWER
27. 36" ADA BASE CABINET
28. 36" ADA BASE CABINET WITH (2) DRAWER
29. GLASS SHELF
30. GLASS DOOR AT DISPLAY NOOK
31. 36" ADA NOOK CABINET
32. 37" NOOK WALL CABINET
33. 37" NOOK BASE CABINET
34. WASHER FRONT LOAD 27" BY OWNER
35. DRYER FRONT LOAD 27" BY OWNER
36. ADA COUNTER-TOP
37. 21" x 13" x 15" OVERHEAD CABINET
38. 22" x 13" x 15" OVERHEAD CABINET
39. OPEN CABINET

SCHEIN - REFER TO VENDOR DRAWINGS

S8	STERILIZ. M.R. TOWER BY DENTAL VENDOR
S13	28X23X13 INSPIRE WALL-MOUNTED CABINET
S14	UPPER STORAGE CABINET
S18	STERILIZATION BY VENDOR
S22	STERILE MODULE 24"
S35	QUARTZ COUNTERTOP
S41	STAINLESS STEEL SINK
S44	BASE CABINET - REFER TO VENDOR LAYOUT

NOTES:

A. VALANCE LIGHT AT ALL OVERHEAD CABINETS

B. FIELD VERIFY ALL DIMENSIONS, TYPICAL

STROUD AND COMPANY
427 8th Street · Macon, Ga 31201
478-743-5097

ALL Architecture, LLC
2052 CHRYSLER DRIVE NE, ATLANTA, GA 30345
TELEPHONE: (404) 316-2896
E-MAIL: INFO@ALLARCHLLC.COM

REVISIONS	
NO.	DATE

COPYRIGHT
THIS DRAWING AND ALL REPRODUCTIONS ARE COPYRIGHTED AND THE PROPERTY OF ALL ARCHITECTURE, LLC AND MAY NOT BE USED IN ANY WAY WITHOUT THEIR PERMISSION.

PROJECT TITLE:
HAMILTON DENTAL
222 CHAMBLESS LN,
HAMILTON, GA 31811

STATE OF GEORGIA
JUAN CAMILO ARCHILA
CERTIFICATE NO. 12113
REGISTERED ARCHITECT
8-2-23

DRAWN:	CHECKED:
JLL	JCA
APPROVED:	ISSUE DATE:
JCA	08/02/23

CAD FILE NAME:
-

SHEET TITLE:
INTERIOR ELEVATIONS

PROJECT NUMBER:
22016

SHEET NO:
A533

SHEET OF

ISSUED FOR CONSTRUCTION

PLOT DATE: 12/11/2018 7:06:02 AM

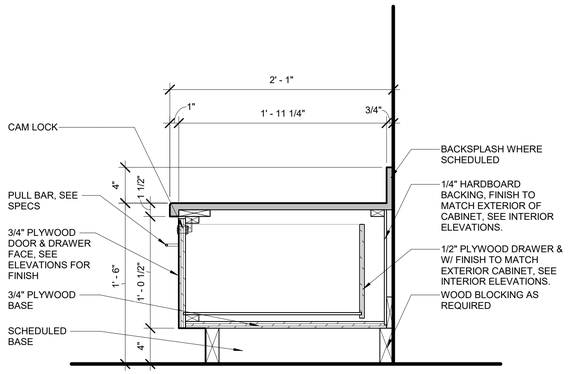

4 A540 PRINTER STATION BASE CABINET
1 1/2" = 1'-0"

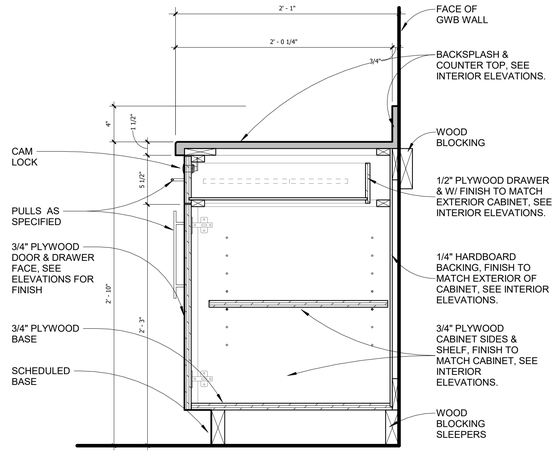

3 A540 BASE CABINET WITH DOOR AND DRAWER
1 1/2" = 1'-0"

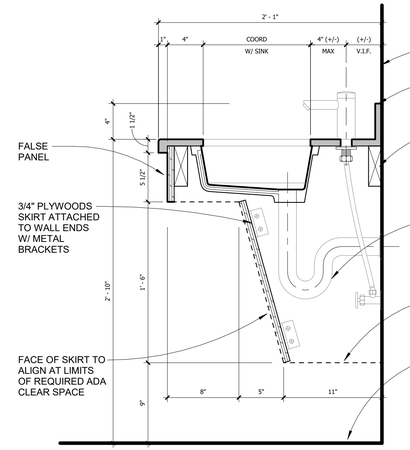

2 A540 COUNTER WITH LAVATORY ADA
1 1/2" = 1'-0"

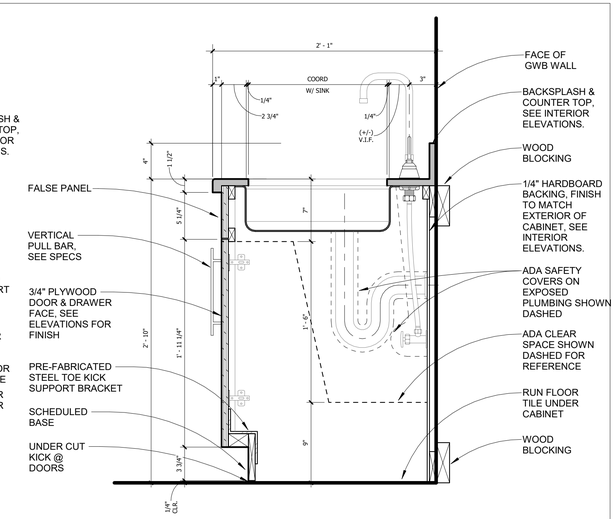

1 A540 BASE CABINET WITH LAVATORY ADA
1 1/2" = 1'-0"

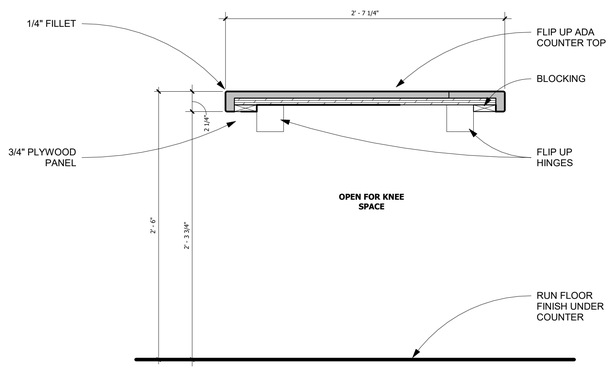

7 A540 RECEPTION DESK - ADA HT
1 1/2" = 1'-0"

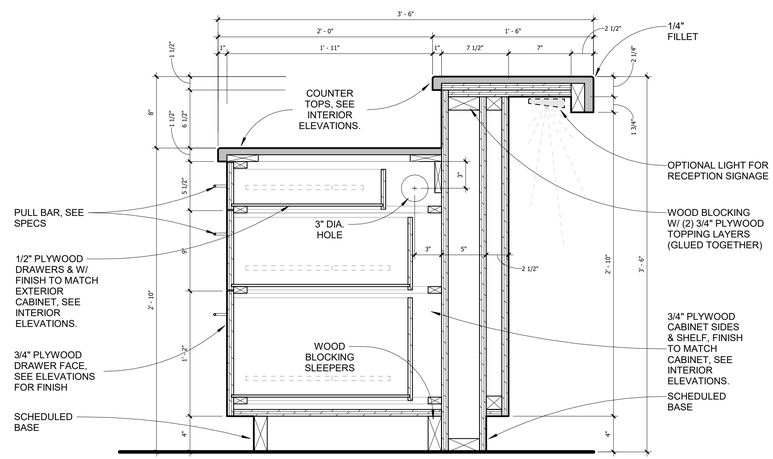

6 A540 RECEPTION DESK AT BASE
1 1/2" = 1'-0"

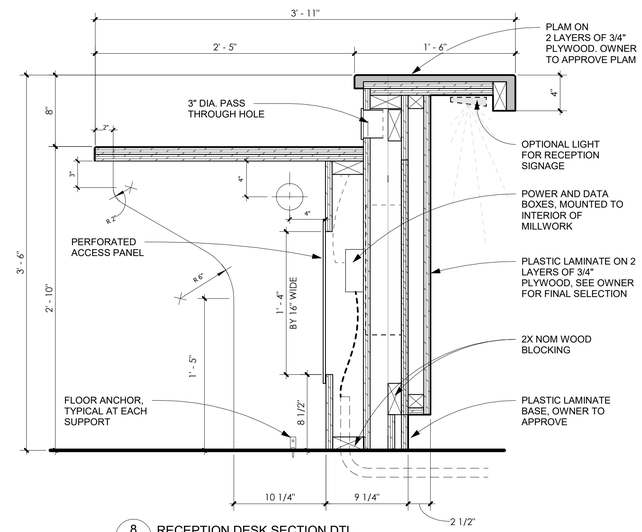

8 A540 RECEPTION DESK SECTION DTL
1 1/2" = 1'-0"

MILLWORK BY G.C. - SEE MILLWORK DRAWINGS

1. ALL MILLWORK ITEMS ARE TO BE PROVIDED BY AND INSTALLED BY GENERAL CONTRACTOR. GENERAL CONTRACTOR SHALL COORDINATE ALL POWER AND DATA LOCATIONS WITH THE MILLWORK.

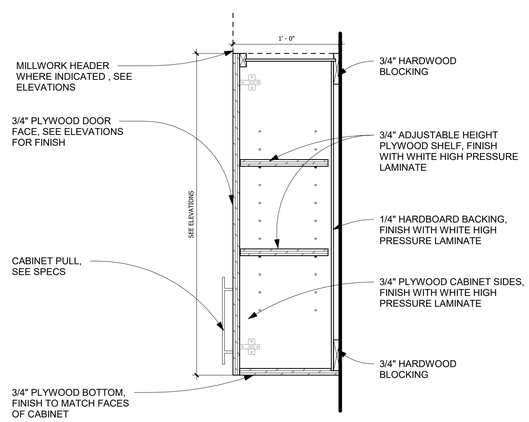

9 A540 UPPER CABINET
1 1/2" = 1'-0"

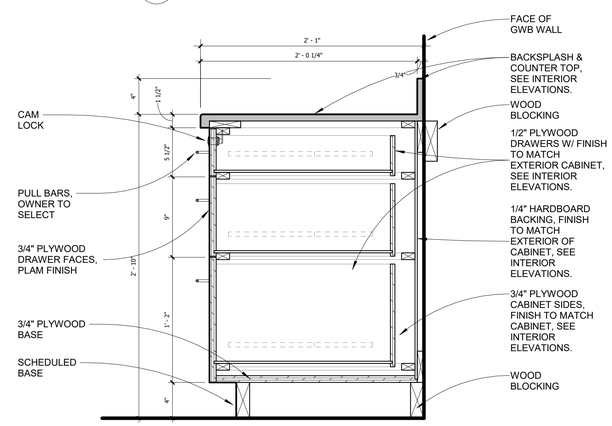

5 A540 BASE CABINET 3 DRAWERS
1 1/2" = 1'-0"

STROUD AND COMPANY
427 8th Street · Macon, Ga 31201
478-743-5097

ALL Architecture, LLC
2052 CHRYSLER DRIVE NE, ATLANTA, GA 30345
TELEPHONE: (404) 316-2896
E-MAIL: INFO@ALLARCHLLC.COM

REVISIONS

NO.	DATE

COPYRIGHT
THIS DRAWING AND ALL REPRODUCTIONS ARE COPYRIGHTED AND THE PROPERTY OF ALL ARCHITECTURE, LLC AND MAY NOT BE USED IN ANY WAY WITHOUT THEIR PERMISSION.

PROJECT TITLE:
HAMILTON DENTAL
222 CHAMBLESS LN,
HAMILTON, GA 31811

STATE OF GEORGIA
JUAN CAMILO ARCHILA
8-2-23
CERTIFICATE NO. 12113
REGISTERED ARCHITECT

DRAWN: JLL	CHECKED: JCA
APPROVED: JCA	ISSUE DATE: 08/02/23

CAD FILE NAME: -

SHEET TITLE:
MILLWORK DETAILS

PROJECT NUMBER: 22016

SHEET NO:
A540

SHEET OF

ISSUED FOR CONSTRUCTION

PLOT DATE: 12/11/2018 7:06:02 AM

REMOVE...USING STOREFRONT TYPE

DOOR AND WINDOW NOTES:

1. MARVIN ELEVATE WINDOWS SHOWN. ARCHITECT TO APPROVE ANY ALTERNATES.
2. EXTERIOR FINISH TO BE FIBERGLASS, ARCHITECT TO SELECT COLOR .
3. INTERIOR TO BE FACTORY PRIMED WOOD.
4. ALL WINDOWS TO BE INOPERABLE.
5. GLASS LIGHTS WITHIN EACH WINDOW TYPE TO BE OF EQUAL SIZE.
6. EXTERIOR SILL TO EXTEND TO FULL WIDTH OF EXTERIOR TRIM, EXTERIOR SILL TO BE CONTINUOUS ACROSS GROUPED WINDOWS
7. INTERIOR HARDWARE FINISH TO BE OIL RUBBED BRONZE FOR ALL HANDLES, LOCKS AND HARDWARE.
8. DOUBLE GLAZED, LOW-E GLASS WITH TEMPERED GLASS AS REQUIRED
9. PROVIDE SDL/PDL WITH INTERIOR SPACER BARS
10. PRIMED & PREP FOR STOOL W/ EXTENDED JAMBS
11. NOMINAL SIZES SHOWN AS WINDOW MANUFACTURERS WINDOW SIZES MAY VARY. . ARCHITECT TO RECEIVE WINDOW PACKAGE TO REVIEW WITH REP MIN 2 WEEKS PRIOR TO ORDERING FOR APPROVAL.
12. CONFIRM ALL WINDOWS MATCH EGRESS AND SAFETY GLAZING REQUIREMENTS PRIOR TO ORDER.

WINDOW SCHEDULE

Type Mark	Description	R.O. Width	R.O. Height	Comments
A	SINGLE BRONZE ANODIZED WINDOW	3' - 0"	5' - 0"	
A1	SINGLE BRONZE ANODIZED WINDOW WITH SPANDREL GLASS	3' - 0"	5' - 0"	SPANDREL GLASS WITH ENCLOSURE BEHIND
B	DOUBLE BRONZE ANODIZED WINDOW	6' - 0"	5' - 0"	
C	LOUVER	1' - 4"	2' - 0"	

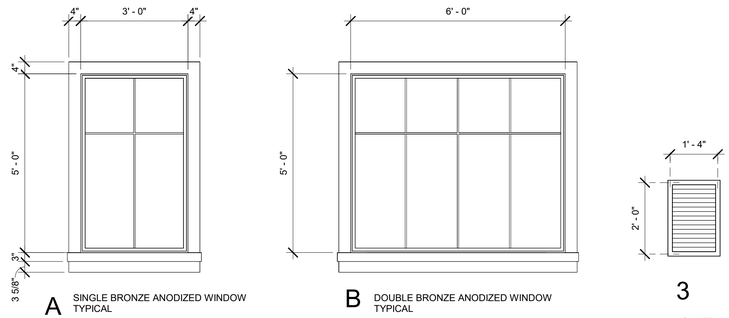

A SINGLE BRONZE ANODIZED WINDOW TYPICAL

B DOUBLE BRONZE ANODIZED WINDOW TYPICAL

3 LOUVER TYPICAL

A1 SINGLE BRONZE ANODIZED WINDOW WITH SPANDREL GLAZING AS SPECIFIED BY ARCHITECT

WINDOWS TYPES
1/2" = 1'-0"

DOOR SCHEDULE

Door Number	Type	Door Width	Door Height	Door Material	Door Finish	Fire Rating	Frame Type	Frame Material	Frame Finish	Comments
100	05	3' - 0"	7' - 0"			60 MINUTE				MAGNETIC HOLD OPEN
200	05	3' - 0"	7' - 0"			60 MINUTE				MAGNETIC HOLD OPEN
220	04	3' - 0"	7' - 0"							
1ST FLOOR										
100	03	3' - 0"	8' - 0"	MTL	PAINTED		SINGLE	GHM	PAINTED	GALVANIZED HOLLOW METAL
106	04	3' - 0"	7' - 0"	WD	STAINED		SINGLE	MTL	PAINTED	
107	04	3' - 0"	7' - 0"	WD	STAINED		SINGLE	MTL	PAINTED	
108	04	3' - 0"	7' - 0"	WD	STAINED		SINGLE	MTL	PAINTED	
109	04	3' - 0"	7' - 0"	WD	STAINED		SINGLE	MTL	PAINTED	
110	04	3' - 0"	7' - 0"	WD	STAINED		SINGLE	MTL	PAINTED	
118	04	3' - 0"	7' - 0"	WD	STAINED		SINGLE	MTL	PAINTED	
120	04	3' - 0"	7' - 0"	WD	STAINED		SINGLE	MTL	PAINTED	
121	04	3' - 0"	7' - 0"	WD	STAINED		SINGLE	MTL	PAINTED	
124	04	3' - 0"	7' - 0"	WD	STAINED		SINGLE	MTL	PAINTED	
126	04	3' - 0"	7' - 0"	WD	STAINED		SINGLE	MTL	PAINTED	
127	04	3' - 0"	7' - 0"	WD	STAINED		SINGLE	MTL	PAINTED	
128	04	3' - 0"	7' - 0"	GHM	PAINTED		SINGLE	MTL	PAINTED	
131	01	6' - 0"	8' - 0"	ALUM/GLASS			DOUBLE	SF		
132	02	3' - 0"	8' - 0"	ALUM/GLASS			SINGLE	SF		
133	03	3' - 0"	8' - 0"	GHM	PAINTED		SINGLE	GHM	PAINTED	GALVANIZED HOLLOW METAL
2ND FLOOR				DOES THIS ONE NEED TO BE 7' TALL						
122	04	3' - 0"	7' - 0"	WD	STAINED		SINGLE	MTL	PAINTED	
201	05	3' - 0"	7' - 0"	WD	STAINED	60 MINUTE	SINGLE	MTL	PAINTED	
202	04	3' - 0"	7' - 0"	WD	STAINED		SINGLE	MTL	PAINTED	
203	05	3' - 0"	7' - 0"	WD	STAINED	60 MINUTE	SINGLE	MTL	PAINTED	
204	04	3' - 0"	7' - 0"	WD	STAINED		SINGLE	MTL	PAINTED	
205	04	3' - 0"	7' - 0"	WD	STAINED		SINGLE	MTL	PAINTED	
206	04	3' - 0"	7' - 0"	WD	STAINED		SINGLE	MTL	PAINTED	
207	04	3' - 0"	7' - 0"	WD	STAINED		SINGLE	MTL	PAINTED	
208	04	3' - 0"	7' - 0"	WD	STAINED		SINGLE	MTL	PAINTED	
209	04	3' - 0"	7' - 0"	WD	STAINED		SINGLE	MTL	PAINTED	
210	04	3' - 0"	7' - 0"	WD	STAINED		SINGLE	MTL	PAINTED	
211	04	3' - 0"	7' - 0"	WD	STAINED		SINGLE	MTL	PAINTED	
212	04	3' - 0"	7' - 0"	WD	STAINED		SINGLE	MTL	PAINTED	
213	04	3' - 0"	7' - 0"	WD	STAINED		SINGLE	MTL	PAINTED	
214	04	3' - 0"	7' - 0"	WD	STAINED		SINGLE	MTL	PAINTED	
215	04	3' - 0"	7' - 0"	WD	STAINED		SINGLE	MTL	PAINTED	
216	04	3' - 0"	7' - 0"	WD	STAINED		SINGLE	MTL	PAINTED	
217	04	3' - 0"	7' - 0"	WD	STAINED		SINGLE	MTL	PAINTED	
218	04	3' - 0"	7' - 0"	WD	STAINED		SINGLE	MTL	PAINTED	
219	04	3' - 0"	7' - 0"	WD	STAINED		SINGLE	MTL	PAINTED	
221	04	3' - 0"	7' - 0"	WD	STAINED		SINGLE	MTL	PAINTED	
222	04	3' - 0"	7' - 0"	WD	STAINED		SINGLE	MTL	PAINTED	
BASEMENT										
001	03	3' - 0"	7' - 0"	GHM	PAINTED		SINGLE	MTL	PAINTED	GALVANIZED HOLLOW METAL
002	04	3' - 0"	6' - 8"	WD	STAINED		SINGLE	MTL	PAINTED	
003	05	3' - 0"	6' - 8"	MTL	STAINED	60 MINUTE	SINGLE	MTL	PAINTED	
004	04	3' - 0"	6' - 8"	WD	STAINED		SINGLE	MTL	PAINTED	
005	04	3' - 0"	6' - 8"	WD	STAINED		SINGLE	MTL	PAINTED	

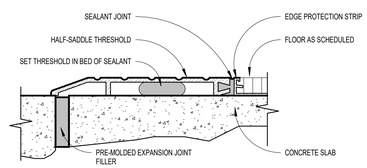

1 A600 DOOR THRESHOLD
6" = 1'-0"

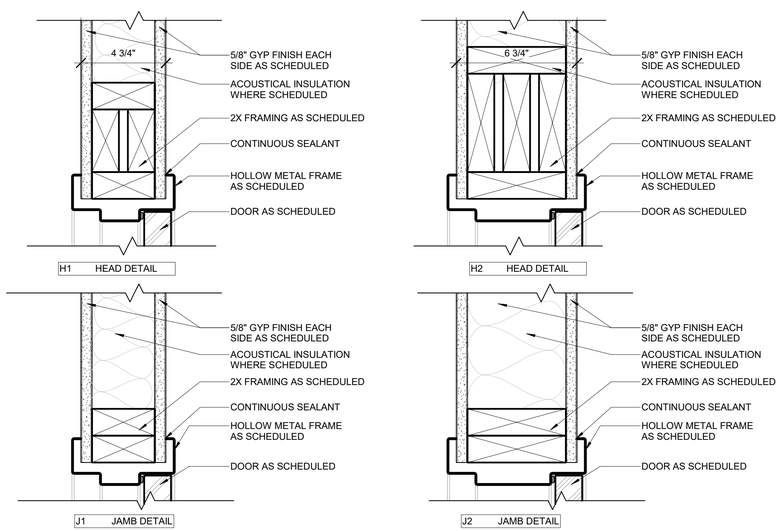

4 A600 INTERIOR DOOR HEAD AND JAMB DETAILS
3" = 1'-0"

WHERE ARE THESE?

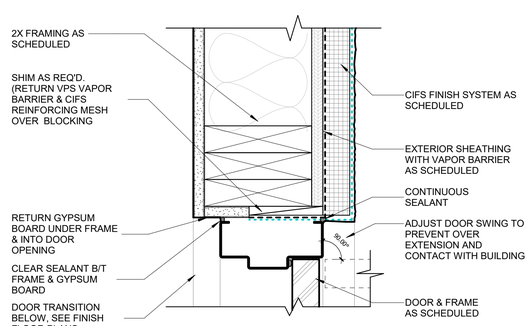

3 A600 CIFS JAMB AT METAL DOOR
3" = 1'-0"

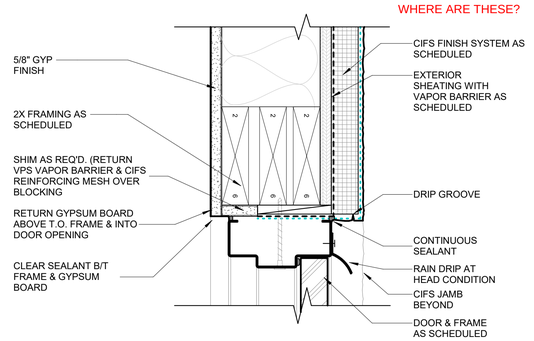

2 A600 CIFS HEAD AT METAL DOOR
3" = 1'-0"

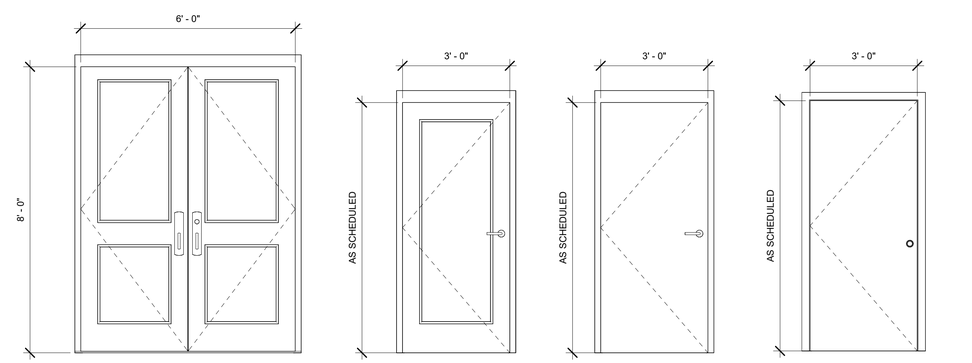

1 EXTERIOR FULL GLASS

2 FULL GLASS

3 EXTERIOR DOOR

4 INTERIOR FLUSH DOOR

5 RATED INTERIOR FLUSH DOOR

DOOR TYPES
1/2" = 1'-0"

STROUD AND COMPANY
427 8th Street · Macon, Ga 31201
478-743-5097

ALL Architecture, LLC
2052 CHRYSLER DRIVE NE, ATLANTA, GA 30345
TELEPHONE: (404) 316-2896
E-MAIL: INFO@ALLARCHLLC.COM

REVISIONS
NO. DATE

COPYRIGHT
THIS DRAWING AND ALL REPRODUCTIONS ARE COPYRIGHTED AND THE PROPERTY OF ALL ARCHITECTURE, LLC AND MAY NOT BE USED IN ANY WAY WITHOUT THEIR PERMISSION.

PROJECT TITLE:
HAMILTON DENTAL
222 CHAMBLESS LN,
HAMILTON, GA 31811

STATE OF GEORGIA
JUAN CAMILO ARCHILA
CERTIFICATE NO. 12116
6-2-23
REGISTERED ARCHITECT

DRAWN: JLL	CHECKED: JCA
APPROVED: JCA	ISSUE DATE: 08/02/23

CAD FILE NAME: -

SHEET TITLE:
WINDOW AND DOOR SCHEDULES

PROJECT NUMBER: 22016

SHEET NO:
A600

SHEET OF

ISSUED FOR CONSTRUCTION

PLOT DATE: 12/11/2018 7:06:02 AM

GENERAL NOTES:

1. THE GENERAL CONTRACTOR AND THEIR SUBCONTRACTORS SHALL COORDINATE STRUCTURAL DRAWINGS WITH ARCHITECTURAL, CIVIL, MECHANICAL, PLUMBING AND ELECTRICAL DRAWINGS, INCLUDING THE SIZE AND LOCATION OF MISCELLANEOUS ITEMS AFFECTING THE STRUCTURAL WORK SUCH AS SMALL OPENINGS, PIPE SLEEVES, RECESSES, BENT PLATES, ETC. PROMPTLY NOTIFY THE ARCHITECT/ENGINEER OF ANY DISCREPANCIES OR OMISSIONS. OPENINGS THROUGH BEAMS, GIRDERS AND/OR COLUMNS SHALL BE VERIFIED BY ENGINEER.

2. THE GENERAL CONTRACTOR SHALL VERIFY ALL DIMENSIONS AND EXISTING SITE CONDITIONS PRIOR TO COMMENCING WORK. PROMPTLY NOTIFY THE ARCHITECT/ENGINEER OF ANY DISCREPANCIES BETWEEN ACTUAL SITE CONDITIONS AND THE CONTRACT DOCUMENTS.

3. THE CONTRACTOR SHALL VERIFY ALL FLOOR AND ROOF MOUNTED MECHANICAL EQUIPMENT DIMENSIONS AND WEIGHTS WITH ARCHITECTURAL AND MECHANICAL DRAWINGS AND REVIEWED SHOP DRAWINGS.

4. THE STRUCTURE IS DESIGNED TO BE SELF–SUPPORTING AND STABLE AFTER THE BUILDING IS FULLY COMPLETED. THE ERECTION PROCEDURE AND SEQUENCE INCLUDING THE DESIGN ADEQUACY AND SAFETY OF ERECTION BRACING, SHORING, RE–SHORING, TEMPORARY SUPPORTS, ETC., ARE THE SOLE RESPONSIBILITY OF THE CONTRACTOR.

5. DO NOT SCALE DRAWINGS. ALL WORK REQUIRING MEASURING SHALL BE DONE ACCORDING TO FIGURES ON DRAWING. ANY MISSING DIMENSIONS WILL BE FURNISHED UPON REQUEST.

6. WHERE A DETAIL IS SHOWN FOR ONE CONDITION, IT SHALL ALSO APPLY FOR ALL LIKE OR SIMILAR CONDITIONS UNLESS NOTED OTHERWISE.

7. THESE GENERAL NOTES APPLY WHERE OTHER PROVISIONS ARE NOT PROVIDED BY THE DRAWINGS, SPECIFICATIONS OR TYPICAL DETAILS. IN CASE OF SPECIAL CONDITIONS INDICATED ON DRAWINGS, THE DRAWINGS SHALL GOVERN OVER THE SPECIFICATIONS.

8. THE CONTRACTOR SHALL PROVIDE ALL CENTERLINE–TO–CENTERLINE DIMENSIONS TO THE STEEL FABRICATOR PRIOR TO SHOP DRAWING SUBMITTAL AND FABRICATION OF STRUCTURAL STEEL.

9. CONSTRUCTION SHALL BE IN ACCORDANCE WITH FEDERAL, STATE, AND LOCAL ORDINANCES, AND THE INTERNATIONAL BUILDING CODE 2018.

10. THE CONTRACTOR IS RESPONSIBLE FOR DESIGNING ALL SHORING, BRACING, AND STRUCTURAL SUPPORTS. TEMPORARY SHORING: PROVIDE AND MAINTAIN SHORING, BRACING, AND STRUCTURAL SUPPORTS AS REQUIRED TO PRESERVE STABILITY AND PREVENT MOVEMENT, SETTLEMENT, OR COLLAPSE OF CONSTRUCTION AND FINISHES TO REMAIN AS WELL AS ADJACENT EXISTING STRUCTURES, AND TO PREVENT UNEXPECTED OR UNCONTROLLED MOVEMENT OR COLLAPSE OF CONSTRUCTION BEING DEMOLISHED.

ABBREVIATION (ALPHABETIZED):

A.B.	=	ANCHOR BOLTS	HDR.	=	HEADER
ARCH.	=	ARCHITECT	HORZ.	=	HORIZONTAL
C.J.	=	CONTROL JOINT	INT.	=	INTERIOR
C.I.P.	=	CAST IN PLACE	I.J.	=	ISOLATION JOINT
CFR	=	CARBON FIBER REINFORCEMENT	MAX.	=	MAXIMUM
CONC.	=	CONCRETE	MANF.	=	MANUFACTURER
CONT.	=	CONTINUOUS	M.C.	=	MOMENT CONNECTION
CONX.	=	CONNECTION	MIN.	=	MINIMUM
COORD.	=	COORDINATE	O.C.	=	ON CENTER
D&E	=	DRILL & EPOXY	O.W.T.	=	OPEN WEB TRUSS
E.O.C.	=	EDGE OF CONCRETE	P.A.F.	=	POWDER ACTUATED FASTENER
E.W.	=	EACH WAY	REINF.	=	REINFORCEMENT
EX.	=	EXISTING	REQ.	=	REQUIRED
EXP.	=	EXPANSION	SIM.	=	SIMILAR
EXT.	=	EXTERIOR	S.O.G.	=	SLAB ON GRADE
F.F.E.	=	FINISH FLOOR ELEVATION	STD.	=	STANDARD
FLR.	=	FLOOR	STL.	=	STEEL
FTG.	=	FOOTING	SQ.	=	SQUARE
GPR	=	GROUND–PENETRATING RADAR	T&B	=	TOP & BOTTOM
GYP.	=	GYPSUM BOARD	TYP.	=	TYPICAL
H.R.	=	HANDRAIL	U.N.	=	UNLESS NOTED
			U.N.O.	=	UNLESS NOTED OTHERWISE
			VERT.	=	VERTICAL
			W.W.M.	=	WELDED WIRE MESH

FOUNDATION:

1. FOUNDATIONS ARE DESIGNED FOR AN ALLOWABLE SOIL BEARING PRESSURE OF 2000 PSF. THIS VALUE SHALL BE VERIFIED BY A REGISTERED SOIL ENGINEER PRIOR TO FOUNDATION CONSTRUCTION. IF ACTUAL VALUES VARY BY MORE THAN TEN PERCENT FROM DESIGN BEARING PRESSURE, FOOTINGS SHALL BE REDESIGNED. ALL FOOTINGS ARE TO BE PLACED ON UNDISTURBED ORIGINAL SOIL OR COMPACTED FILL.

2. ALL BACKFILLING SHALL BE ACCOMPLISHED USING MATERIAL CONSISTING OF CRUSHED STONE AND/OR MATERIAL APPROVED BY A REGISTERED SOILS ENGINEER. FILL MATERIAL TAKEN FROM SITE EXCAVATION SHALL HAVE OPTIMUM MOISTURE CONTENT FOR COMPACTION AND BE FREE OF ANY DEBRIS. BACKFILL SHALL BE COMPACTED TO 95% MAXIMUM DENSITY AS DETERMINED BY ASTM D698, IN MAXIMUM LIFTS OF EIGHT INCHES. NO BACKFILL MATERIAL SHALL BE PLACED AGAINST WALLS WITHOUT PROVISIONS FOR ADEQUATE BRACING OF THESE WALLS.

3. FILL MATERIAL SHALL BE ADEQUATELY DRAINED TO PREVENT ANY DAMAGE TO THE BUILDING'S FOUNDATION BY GROUND WATER FLOWS OR SURFACE WATER RUN–OFF.

4. REMOVE ORGANIC MATERIALS AND LARGE ROCKS AND PROVIDE TERMITE TREATMENT PRIOR TO PLACING VAPOR BARRIER AND CONCRETE SLABS.

5. ALL SOIL CONDITIONS ARE SUBJECT TO EVALUATION BY A SOILS ENGINEER PRIOR TO FOUNDATION CONSTRUCTION. SOILS WITHOUT ADEQUATE CAPACITY TO SUPPNSTRUCT DESIGN LOADS MUST BE REPLACED OR MODIFIED PRIOR TO PROCEEDING WITH CONSTRUCTION.

6. ALL VAPOR BARRIERS SHALL BE 10 MIL. THICKNESS AND CONFORM TO ASTM E1745 CLASS A UNLESS NOTED OTHERWISE.

7. PATIO SLABS ARE TO BE 4" THICK STANDARD CONCRETE SLABS WITH TURNED DOWN EDGE.

8. ALL WIRE MESH AND REBARS ARE TO BE PLACED ON SUPPORTS PER ACI STANDARDS PRIOR TO POURING CONCRETE.

9. SEE ARCHITECTURAL DRAWINGS FOR CONCRETE FINISHING REQUIREMENT.

10. WHERE A UTILITY LINE PASSES UNDER A FOOTING, PROVIDE A STEEL OR PRECAST SLEEVE WITH MINIMUM 2" CLEAR ON ALL SIDES OF PIPE. CONDUITS AND PIPES EMBEDDED IN SLABS SHALL NOT BE LARGER IN OUTSIDE DIMENSION THAN ONE THIRD THE OVERALL THICKNESS OF THE SLAB, SHALL NOT BE SPACED CLOSER THAN THREE DIAMETERS OR WIDTHS ON CENTER. A MINIMUM SLAB THICKNESS OF 2½" MUST BE MAINTAINED OVER EMBEDDED ITEMS.

11. UNLESS NOTED OTHERWISE, CONCRETE WALLS ARE DESIGNED AS VERTICALLY SPANNING WALLS, NOT AS CANTILEVERED RETAINING WALLS. THE GENERAL CONTRACTOR SHALL PROVIDE, INSTALL, AND MAINTAIN TEMPORARY SHORING/BRACING AS REQUIRED DURING BACKFILLING AND COMPACTION OF RETAINED GRADE. WALLS SHALL BE CURED AT LEAST SEVEN DAYS PRIOR TO PLACEMENT OF BACKFILL.

12. ANCHOR BOLTS ARE TO BE GRADE F1554, GR 36 AND EMBED 7" INTO THE FOUNDATION, AND PROJECT 3" MIN

CONCRETE:

1. CONCRETE WORK SHALL CONFORM TO ALL REQUIREMENTS OF ACI 301, "SPECIFICATION FOR STRUCTURAL CONCRETE", EXCEPT AS NOTIFIED BY THE REQUIREMENTS OF THESE STRUCTURAL DRAWINGS.

2. CONCRETE SHALL BE NORMAL WEIGHT AND HAVE A DESIGNATED COMPRESSIVE STRENGTH ($F'c$) IN 28 DAYS OF 3000 PSI WITH A 4" (±1") SLUMP UNLESS NOTED OTHERWISE. REFER TO CONCRETE MIX SCHEDULE FOR ADDITIONAL CONCRETE STRENGTH AND DURABILITY REQUIREMENTS.

3. SAWN CONTROL JOINTS IN FLOOR SLABS, AS INDICATED ON THE PLANS BY "C.J.", SHALL BE 1/8" WIDE x 1" DEEP AND SHOULD BE CUT (AS SOON AS CONDITIONS ALLOW) WITHIN 12 HOURS AFTER CONCRETE IS PLACED. MAXIMUM "C.J." SPACING SHALL BE 15 FT IN EITHER DIRECTION.

4. CONSTRUCTION OR ISOLATION JOINTS SHALL BE PLACED IN THE SLAB AT A MAXIMUM SPACING OF 150 FEET IN BOTH DIRECTIONS.

5. JOINT FILLER AT CONTROL JOINTS, CONSTRUCTION AND ISOLATION JOINTS SHALL BE A SEMI–RIGID MATERIAL AND WILL BE APPLIED FULL DEPTH TO PREVENT MOVEMENT.

6. SLAB–ON–GRADE NOT OTHERWISE SPECIFIED, SHALL BE 4" THICK MINIMUM REINFORCED WITH 6x6–W2.9xW2.9 WELDED WIRE MESH PLACED 1" FROM TOP OF SLAB. USE PLASTIC MESH 'CHAIRS' SPACED SO THAT NO MORE THAN 3 SQ FEET OF WIRE IS SUPPORTED ON EACH 'CHAIR', UNLESS OTHERWISE SPECIFIED. ALTERNATELY, SLAB MAY BE REINFORCED WITH MACROFIBER (AT 3.0 LB PER CY), FORTA–FERRO OR FIBERMESH650 OR EQUIVALENT. SLAB SHALL BE PLACED ON 10–MIL VAPOR BARRIER ON 4" OF #57 STONE OR COMPACTED SAND OR CRUSHER RUN. VAPOR BARRIER MAY BE OMITTED FROM DRIVES, WALKS, PATIOS, AND OTHER FLAT WORK NOT LIKELY TO BE ENCLOSED AND HEATED AT A LATER DATE. JOINTS LAPPED NOT LESS THAN 6".

7. CONCRETE COARSE AGGREGATE, WITH A MAXIMUM SIZE OF 1" MAY BE USED IN FOUNDATIONS. ALL OTHER CONCRETE SHALL HAVE A COARSE AGGREGATE WITH A MAXIMUM SIZE OF ¾".

8. CONCRETE MIXING, TRANSPORTING, PLACING, AND CURING SHALL BE DONE IN ACCORDANCE WITH THE RECOMMENDATIONS OF ACI 301. READY–MIXED CONCRETE SHALL BE MIXED AND DELIVERED IN ACCORDANCE WITH REQUIREMENTS OF ASTM C94 OR ASTM C685.

9. ALL EQUIPMENT FOR MIXING AND TRANSPORTING CONCRETE SHALL BE CLEAN. ALL DEBRIS, WATER AND ICE SHALL BE REMOVED PRIOR TO PLACING CONCRETE. FORMS SHALL BE PROPERLY COATED. MASONRY FILLER UNITS THAT WILL BE IN CONTACT WITH CONCRETE SHALL BE WELL DRENCHED. REINFORCEMENT SHALL BE CLEAN OF ICE OR OTHER DELETERIOUS COATING. ALL LAITANCE AND OTHER UNSOUND MATERIAL SHALL BE REMOVED BEFORE ADDITIONAL CONCRETE IS PLACED AGAINST HARDENED CONCRETE.

10. SAMPLES FOR STRENGTH TESTS SHALL BE TAKEN IN ACCORDANCE WITH ASTM C172. SAMPLES FOR STRENGTH TESTS OF EACH CLASS OF CONCRETE PLACED EACH DAY SHALL BE TAKEN NOT LESS THAN ONCE A DAY, NOR LESS THAN ONCE FOR EACH 150 CU YD OF CONCRETE NOR LESS THAN ONCE FOR EACH 5,000 SQ FT OF SURFACE AREA FOR SLABS OR WALLS. A STRENGTH TEST SHALL BE THE AVERAGE OF THE STRENGTHS OF TWO CYLINDERS MADE FROM THE SAME SAMPLE OF CONCRETE AND TESTED AT 28 DAYS OR AT THE TEST AGE DESIGNATED FOR DETERMINATION OF $F'c$.

11. CYLINDERS FOR STRENGTH TESTS SHALL BE MOLDED AND LABORATORY CURED IN ACCORDANCE WITH ASTM C31 AND TESTED IN ACCORDANCE WITH ASTM C39.

12. NO CONSTRUCTION LOADS SHALL BE SUPPORTED ON, NOR ANY SHORING REMOVED FROM, ANY PART OF THE STRUCTURE UNDER CONSTRUCTION EXCEPT WHEN THAT PORTION OF THE STRUCTURE IN COMBINATION WITH REMAINING FORMING AND SHORING SYSTEM HAS SUFFICIENT STRENGTH TO SUPPORT SAFELY ITS WEIGHT AND LOADS PLACED THEREON.

13. THE CLEAR DISTANCE BETWEEN REINFORCING BARS, BUNDLED BARS, PRE–STRESSING TENDONS, AND DUCTS SHALL BE IN ACCORDANCE WITH THE LIMITATIONS OF ACI 318.

14. MINIMUM COVER FOR CAST–IN–PLACE CONCRETE REINFORCEMENT:

	MINIMUM COVER (IN)
(a) CONCRETE CAST AGAINST AND PERMANENTLY EXPOSED TO EARTH	3
(b) CONCRETE EXPOSED TO EARTH OR WEATHER:	
#6 THROUGH #18 BARS	2
#5 BAR, W31 OR D31 WIRE, AND SMALLER	1½
(c) CONCRETE NOT EXPOSED TO WEATHER OR IN CONTACT WITH GROUND:	
SLAB, WALLS, JOIST: #11 BARS AND SMALLER	¾
BEAMS, COLUMNS: PRIMARY REINFORCEMENT, TIES, STIRRUPS, SPIRALS	1½

15. UNLESS NOTED OTHERWISE, PROVIDE VERTICAL CONTROL JOINTS IN STEP WALLS AND RETAINING WALLS @ 25'–0" O.C. MAXIMUM.

MINIMUM CONCRETE MIX REQUIREMENTS

USE	MIN. f'_c, psi	DURABILITY REQ'S
PARKING SLAB	3,000	F3, S0, W0, C2
EXT. S.O.G. & FOUNDATIONS	3,000	F2, S0, W0, C1
INTERIOR SLAB ON GRADE	4,000	F0, S0, W0, C1
EXTERIOR RETAINING WALLS	3,000	F3, S0, W0, C1
BASEMENT WALLS	3,000	F2, S0, W0, C1
EXT. ELEVATED SLABS	3,000	F2, S0, W0, C1
INT. ELEVATED SLABS	4,000	F0, S0, W0, C0

DURABILITY REQUIREMENTS BASED UPON ACI 318–14 TABLES 19.3.1.1 & 19.3.2.1, WHICH CLARIFY REQUIRED MINIMUM f'_c, w/c, RATIO AND OTHER GUIDELINES FOR MIX DESIGN. MIN. f'_c SHOWN IS BASED UPON REQ'D FOR STRENGTH DEMAND. f'_c REQ'D FOR DURABILITY REQ'S MAY EXCEED MIN. STRENGTH REQ'S.

REINFORCING:

1. CONCRETE REINFORCING STEEL SHALL COMPLY WITH THE REQUIREMENTS OF ASTM A615, GRADE 40 FOR #3 BARS AND ASTM A615, GRADE 60 FOR #4 AND LARGER BARS. WELDED WIRE MESH SHALL COMPLY WITH THE REQUIREMENTS OF ASTM A185.

2. DETAILING OF CONCRETE REINFORCEMENT AND ACCESSORIES SHALL BE IN ACCORDANCE WITH ACI 315, LATEST EDITION.

3. REINFORCING STEEL SHALL BE SPLICED ONLY AS INDICATED ON THE PLANS. WHEN SPLICE LENGTHS ARE NOT GIVEN ON THE PLANS, THEY SHALL BE TAKEN FROM THE TABLE BELOW. USE "CLASS B" LAPS UNLESS THE PLANS INDICATE "CLASS A".

BAR SIZE	CLASS "B" SPLICE	CLASS "A" SPLICE
#3	28"	22"
#4	37"	29"
#5	47"	36"
#6	56"	43"
#7	81"	63"
#8	93"	72"
#9	105"	81"
#10	118"	91"
#11	131"	101"

LAPS SHOWN ABOVE WERE CALCULATED PER ACI 318–14 EQ.25.4.2.3a FOR MATS, WALLS, BEAMS, COLUMNS AND SLABS. VALUES ASSUMED ARE: f'c 3000 PSI, Ktr=0, 1" MIN COVER AND 2" MIN CLEAR BETWEEN BARS FOR #4, #5 AND #6 BARS, AND 1½" MIN COVER AND 3" MIN CLEAR BETWEEN BARS FOR #7 THRU #11 BARS. SHORTER LAPS MAY BE CALCULATED FOR SOME SPECIFIC CONDITIONS SUCH AS TIED BEAMS OR ADDITIONAL COVER. LAPS MUST BE INCREASED 50% PER ACI 318–14 FOR EPOXY COATED REBAR, OR 30% FOR LIGHTWEIGHT CONCRETE.

4. HORIZONTAL WALL REINFORCEMENT SHALL BE CONTINUOUS AND HAVE 90–DEGREE BENDS AND EXTENSIONS AT CORNERS AND INTERSECTIONS AS SHOWN ON TYPICAL BAR PLACING DETAILS UNLESS OTHERWISE SHOWN. ALL WALLS SHALL HAVE FOLLOWING REINFORCING UNLESS OTHERWISE NOTED:

   8" WALLS – #4 @ 12" O.C. EACH WAY @ WALL CENTERLINE
   10" WALLS – #5 @ 12" O.C. EACH WAY EACH FACE

5. LAPS IN W.W.F. SHOULD BE ONE MESH PLUS TWO INCHES AT SPLICES.

6. PROVIDE EXTRA REINFORCING AROUND ALL OPENINGS, INCLUDING DOOR OPENINGS: TWO #5 BARS AT ALL FOUR SIDES OF EACH OPENING AND EXTEND 2'–0" BEYOND THE CORNERS OF THE OPENING. ADD TWO #5 BARS 4'–0" LONG AS DIAGONAL BARS AT EACH CORNER.

7. TEMPERATURE STEEL FOR SLABS SHALL BE #3 @ 16" O.C. OR 6x6–W2.9xW2.9 W.W.M. PLACED 1" FROM TOP OF SLAB UNLESS SHOWN OTHERWISE. WHERE W.W.M. IS USED, USE PLASTIC MESH 'CHAIRS' SPACED SO THAT NO MORE THAN 3 SQ FEET OF MESH IS SUPPORTED ON EACH 'CHAIR', UNLESS OTHERWISE SPECIFIED

8. ALL BAR HOOKS SHALL BE STANDARD 90–DEGREE HOOKS UNLESS NOTED OTHERWISE ON THE DRAWINGS.

9. SEE SECTIONS 19.3 & 20.6 OF ACI 318–14 FOR CONDITIONS NOT NOTED.

10. DESIGN OF STRUCTURAL ELEMENTS INCLUDING WALLS, FORMED SLABS, BEAMS AND COLUMNS IS IN ACCORDANCE WITH ACI 318

STRUCTURAL STEEL:

1. STRUCTURAL STEEL MATERIALS SHALL MEET THE REQUIREMENTS OF THE FOLLOWING SPECIFICATIONS UNLESS OTHERWISE NOTED:

STRUCTURAL STEEL	ASTM A992 GRADE 50 U.N.
STEEL ANGLES & PLATES	ASTM A36 U.N.
STEEL PIPES	ASTM A53, GRADE B
STEEL TUBES (HSS)	ASTM A500, GRADE C
HIGH STRENGTH BOLTS	ASTM A325
NUTS	ASTM A563
UNFINISHED BOLTS	ASTM A307
WELDING ELECTRODES	AWS CLASS E70
ANCHOR BOLTS	F1554, GR. 36

2. THE STRUCTURAL STEEL FABRICATOR SHALL BE RESPONSIBLE FOR THE DESIGN OF ALL CONNECTIONS NOT DETAILED HEREIN. SHOP DRAWINGS SHALL BE FULLY APPROVED BY THE STRUCTURAL ENGINEER PRIOR TO FABRICATION. DESIGN OF SPECIAL CONNECTIONS BETWEEN STEEL FRAMING COMPONENTS BY OTHER THAN THE PROJECT STRUCTURAL ENGINEER–OF–RECORD SHALL BE PERFORMED BY A PROFESSIONAL ENGINEER REGISTERED IN THE STATE OF PROJECT. CONNECTION DESIGN INCLUDING BUT NOT LIMITED TO BRACE END CONNECTIONS, MOMENT–RESISTING CONNECTIONS, MODIFIED BEAM SEAT CONNECTIONS, AND MEMBER SPLICE CONNECTIONS. INDICATE DESIGN FORCES AND REACTIONS FOR EACH APPLICABLE CONNECTION.

3. SHOP CONNECTIONS MAY BE WELDED OR BOLTED.

4. FIELD CONNECTIONS SHALL BE BOLTED USING HIGH STRENGTH BOLTS EXCEPT WHERE FIELD WELDING IS SHOWN ON THE DRAWINGS.

5. BOLTED CONNECTIONS SHALL BE BEARING TYPE WITH THREADS INCLUDED IN THE SHEAR PLANE AND SHALL BE ASSEMBLED AND INSPECTED IN ACCORDANCE WITH CURRENT EDITION OF THE RCSC "SPECIFICATION FOR STRUCTURAL JOINTS USING HIGH–STRENGTH BOLTS."

6. HIGH STRENGTH BOLTS SHALL BE 3/4" DIAMETER MINIMUM UNLESS OTHERWISE NOTED.

7. THE STRUCTURAL STEEL FRAME SHALL BE BRACED IN TWO DIRECTIONS DURING CONSTRUCTION, INCLUDING HORIZONTAL BRACING AT CONCRETE FLOORS, UNTIL ALL FINAL CONNECTIONS HAVE BEEN MADE AND CONCRETE IS PLACED AND CURED.

8. FOR STRUCTURAL STEEL COLUMNS WITH A BASEPLATE THAT HAS LESS THAN 4 BOLTS, TEMPORARY BRACING SHALL BE PROVIDED IN TWO DIRECTIONS DURING CONSTRUCTION, INCLUDING HORIZONTAL BRACING AT CONCRETE FLOORS, UNTIL ALL FINAL CONNECTIONS HAVE BEEN MADE AND CONCRETE IS PLACED AND CURED.

9. ALL STRUCTURAL WELDED JOINTS SHALL CONFORM TO THE PROVISIONS OF AWS D1.1, STRUCTURAL WELDING CODE BY AMERICAN WELDING SOCIETY.

10. PROOF OF WELDER CERTIFICATIONS SHALL BE AVAILABLE AT THE JOB SITE DURING TIMES OF INSPECTION.

11. ALL EXTERIOR AND EXPOSED STEEL SHALL BE EPOXY COATED, GALVANIZED, OR OTHERWISE PROTECTED AGAINST CORROSION AND EXPOSURE EFFECTS. COORDINATE W/ ARCH. FOR FINISH.

12. THE FASTENER SCHEDULE FOR BEAMS SHALL BE:

BEAM SIZES		# OF BOLTS
W8	=	2
W10 – W12	=	3
W14 – W16	=	4
W18 – W21	=	5
W24 – W27	=	6
W30	=	7

SPECIAL INSPECTIONS & TESTING:

1. REQUIREMENTS FOR SPECIAL INSPECTIONS & TESTING FOR THE PROJECT ARE SPECIFIED IN ACCORDANCE WITH IBC SECTION 1704.3. SCHEDULE OF SPECIAL INSPECTIONS & TESTING REQUIREMENTS IS PROVIDED WITHIN THE CONTRACT DOCUMENTS.

2. SPECIAL INSPECTION REPORTS AND FINAL REPORT IN ACCORDANCE WITH SECTION 1704.2.4 SHALL BE SUBMITTED TO THE BUILDING OFFICIAL PRIOR TO THE TIME THAT PHASE OF WORK IS APPROVED FOR OCCUPANCY.

SUBMITTAL NOTES:

1. THE GENERAL CONTRACTOR SHALL SUBMIT A SCHEDULE OF SUBMITTALS PRIOR TO CONSTRUCTION BEGINNING ON THE PROJECT. THE SCHEDULE SHOULD DESCRIBE WHAT EACH SUBMITTAL IS, WHETHER IT IS THE ENTIRE PACKAGE, OR BROKEN INTO PHASES FOR REVIEW.

2. THE GENERAL CONTRACTOR SHALL ALLOW FOR 10 BUSINESS DAYS OF ALL STRUCTURAL SUBMITTALS. IF THE CONTRACTOR WISHES TO EXPEDITE OR REDUCE THE REVIEW TIME, IT SHALL BE DONE FOR AN ADDITIONAL CHARGE AND MUST BE NEGOTIATED PRIOR TO THE SUBMISSION OF THE PACKAGE.

3. IN THE EVENT THAT THE CONTRACTOR ATTEMPTS TO SUBMIT THE ENTIRE PROJECT AT THE SAME TIME FOR SUBMISSION, ADDITIONAL TIME WILL BE REQUIRED BEYOND THE STANDARD 10 DAY REVIEW TIME.

4. COMPLETE SHOP DRAWINGS FOR CONSTRUCTION OF EACH BUILDING COMPONENT NOT DESIGNED BY THE DESIGN TEAM–OF–RECORD AND NOT SPECIFIED ON THE PROJECT CONSTRUCTION DOCUMENTS SHALL BE SEALED AND SIGNED BY A PROFESSIONAL ENGINEER REGISTERED IN THE STATE OF GEORGIA AND SHALL BE AVAILABLE AT THE JOB SITE DURING THE TIMES OF INSPECTION."

MINIMUM REQUIRED SUBMITTALS

	EPOXY & MECHANICAL ANCHORS	MISC. CONC. PRODUCTS	CONC. MIX DESIGN	STRUCTURAL STEEL & CONNECTIONS	REBAR	WOOD FLOOR AND ROOF TRUSSES
PRODUCT LITERATURE	ü	ü	ü			
SHOP DRAWINGS				ü	ü	
CALCULATIONS (SIGNED & SEALED)						ü

DELEGATED (SPECIALTY) ENGINEERING REQUIREMENTS:

1. SEE "MINIMUM REQUIRED SUBMITTALS" TABLE IN THESE DRAWINGS FOR STRUCTURAL ELEMENTS/PRODUCTS WHICH REQUIRE SUBMITTALS.

2. DEFINITION OF DELEGATED (SPECIALTY) ENGINEER: A PROFESSIONAL ENGINEER, WHO IS LICENSED IN THE SAME STATE AS THE PROJECT, NOT THE STRUCTURAL ENGINEER OF RECORD, WHO SPECIALIZES IN AND WHO UNDERTAKES THE DESIGN OF STRUCTURAL COMPONENTS PREPARED FOR THIS PROJECT.

3. SUBMITTALS FOR CUSTOM DESIGNED, MANUFACTURED OR FABRICATED LOAD CARRYING ITEMS, AND CUSTOM FABRICATED ITEMS THAT ARE REQUIRED BY CODES OR STANDARDS TO RESIST FORCES AND STRESSES, INCLUDING THEIR CONNECTIONS, ANCHORAGES, AND ATTACHMENTS REQUIRE A DELEGATED ENGINEER.

4. FOR EACH CATEGORY OF SUBMITTAL REQUIRING INPUT FROM A DELEGATED ENGINEER, THE CONTRACTOR SHALL ATTACH TO THE FIRST SUBMITTAL A SIGNED AND SEALED LETTER FROM THE RESPONSIBLE DELEGATED ENGINEER STATING: "I CERTIFY THAT THE DESIGN AND DRAFTING OF THE SHOP DRAWINGS WHICH ARE SIGNED AND SEALED BY ME WERE PREPARED UNDER MY DIRECT SUPERVISION AND CONTROL, AND TO THE BEST OF MY KNOWLEDGE THE SHOP DRAWINGS COMPLY WITH THE APPLICABLE MINIMUM BUILDING CODES AND CONTRACT DRAWINGS.

5. REVIEW BY THE STRUCTURAL ENGINEER OF RECORD OF SUBMITTALS IS LIMITED TO THE FOLLOWING:
   a. THE SPECIFIED STRUCTURAL SUBMITTALS HAVE BEEN FURNISHED.
   b. THE STRUCTURAL SUBMITTALS HAVE BEEN SIGNED AND SEALED BY THE DELEGATED ENGINEER.
   c. THE DELEGATED ENGINEER HAS UNDERSTOOD THE DESIGN INTENT AND HAS USED THE SPECIFIED STRUCTURAL CRITERIA. NO DETAIL CHECK OF CALCULATIONS WILL BE MADE.
   d. THE CONFIGURATION SET FORTH IN THE STRUCTURAL SUBMITTALS IS CONSISTENT WITH THE CONTRACT DOCUMENTS. NOT DETAILED CHECK OF DIMENSIONS OR QUANTITIES WILL BE MADE.

6. SUBMITTALS NOT MEETING THE ABOVE CRITERIA WILL NOT BE REVIEWED.

23244—HAMILTON DENTAL.DWG

Wednesday, August 2, 2023 BY TRAVEON HARRIS

GEORGIA REGISTERED No. PE044647 PROFESSIONAL ENGINEER 08-02-23 JAMES T. BREEDEN

ISSUED FOR CONSTRUCTION

REV	DESCRIPTION	DRWN	APPR	DATE

HAMILTON DENTAL

GENERAL NOTES

SCALE: NOTED
DATE: 08/02/2023
DRWN BY: JH
CHKD BY: JTB
SHEET NUMBER: S–0.0

Se Stability Engineering
1376 Church St, Ste 200, Decatur, GA 30030 Ph/Fax: 404-377-9316

PROJECT NO. SE#23244
SHT 1 OF 12
REV 0

WOOD:

1. ALL CONVENTIONAL TIMBER CONSTRUCTION SHALL CONFORM TO THE "NATIONAL DESIGN SPECIFICATION FOR WOOD CONSTRUCTION" BY THE AMERICAN FOREST AND PAPER ASSOCIATION. ALL STUDS SHALL BE #2 SPRUCE–PINE–FIR OR BETTER. ALL OTHER TIMBER SHALL BE STRUCTURAL GRADED #2 SOUTHERN PINE OR BETTER UNLESS NOTED OTHERWISE. PLYWOOD CONSTRUCTION SHALL UTILIZE AMERICAN PLYWOOD ASSOCIATION RATED MATERIALS.
2. ALL TIMBER IN CONTACT WITH CONCRETE OR MASONRY WITHIN 6" OF GRADE, OR REMAIN EXPOSED TO WEATHER SHALL BE PRESSURE TREATED #2 SOUTHERN PINE, AWPA STANDARD U1.
3. AT LOAD BEARING WALLS, TOP PLATE SHALL BE DOUBLE, SILL PLATE SHALL BE SINGLE. ALL LOAD BEARING WALLS SHALL BE CONSTRUCTED OF STUDS AND PLATES WITH A MOISTURE CONTENT ≤ 19%.
4. FOR SHINGLE/METAL – ROOF SHEATHING SHALL BE 24/16 5/8" MIN. APA RATED SHEATHING U.N.O., LAID WITH FACE GRAIN PERPENDICULAR TO THE FRAMING AND STAGGERED 4'–0". MINIMUM NAILING SHALL BE 8d NAILS @ 6" O.C. ALL UNSUPPORTED EDGES OF PLYWOOD SHEATHING SHALL BE SUPPORTED WITH SIMPSON PSCL CLIPS. PROVIDE (2) CLIPS EQUALLY SPACED BETWEEN EACH TRUSS/SUPPORT. CLIPS NOT REQUIRED FOR TONGUE AND GROOVE SHEATHING.
5. SUB–FLOOR SHEATHING SHALL BE 48/24 3/4" APA RATED PLYWOOD U.N.O. GLUED AND NAILED TO JOISTS. MINIMUM NAILING SHALL BE 8d NAILS AT 6" O.C. ON PANEL EDGES AND 12" O.C. AT INTERIOR SUPPORTS.
6. ALL EXTERIOR WALL SHEATHING AND SHEAR PANEL SHEATHING SHALL BE 1/2" PLYWOOD U.N.O. MINIMUM NAILING SHALL BE 8d x 2 1/2" LONG NAILS SPACED AT 6" O.C. ON PANEL EDGES AND 6" O.C. AT INTERIOR AREAS. COORDINATE NAIL SPACING WITH SHEARWALL PLANS. CONTRACTOR TO INSPECT ALL NAILING BEFORE EXTERIOR VENEER IS PLACED. DRYWALL NAILING TO BE APPROVED BEFORE TAPING. PROVIDE STEEL PLATE WASHERS @ EXTERIOR WALL AND SHEAR PANEL ANCHOR BOLTS, SEE NOTE BELOW FOR TYPICAL BOLT SIZE & SPACING. AT 2x4 WALLS, WASHERS SHALL BE MINIMUM 3"x3"x1/4" STEEL PLATE (SIMPSON BPS 1/2–3 OR EQUIVALENT). AT 2x6 WALLS, WASHERS SHALL BE MINIMUM 3"x4 1/2"x1/4" STEEL PLATE (SIMPSON BPS 1/2–6 OR EQUIVALENT) ORIENTED WITH LONG DIRECTION PERPENDICULAR TO WALL.
7. ALL LOAD BEARING AND EXTERIOR WALLS SHALL BE CONSTRUCTED IN ACCORDANCE WITH THE STUD WALL SCHEDULE AND NOTES.
8. PLACE (2) STUDS MINIMUM IN WALLS FOR BEARING OF ALL BEAM, HIP, VALLEY MEMBERS U.N.O AS GREATER ON PLANS. EACH LAYER OF GANGED STUDS SHALL BE NAILED TO ADJACENT STUDS WITH 10d NAILS @ 8" O.C. STAGGERED. CONTINUE ALL POSTS DOWN TO FOUNDATION OR TRANSFER BEAMS BELOW.
9. BEAMS DESIGNATED ON THE PLANS AS LVL SHALL BE 1–3/4" WIDTH AND 2.0E LAMINATED VENEER LUMBER AS MANUFACTURED BY TRUS–JOIST (WEYERHAUSER) OR APPROVED ALTERNATE.
10. COLUMNS DESIGNATED ON THE PLANS AS PSL SHALL BE 1.8E PARALLEL STRAND LUMBER AS MANUFACTURED BY TRUS–JOIST (WEYERHAUSER) OR APPROVED ALTERNATE
11. DURING CONSTRUCTION, PROVIDE BRACING FOR FRAMING UNTIL ALL ELEMENTS FOR EXTERIOR SHEAR WALLS AND FLOOR DIAPHRAGMS ARE IN PLACE.
12. UNLESS DETAILED SPECIFICALLY OTHERWISE, USE A METAL CONNECTOR AT ALL BEAM & TRUSS SUPPORTS, BEAM TO BEAM, POST TO BEAM, AND POST TO FLOOR CONNECTIONS. USE SIMPSON PRODUCTS, OR AN APPROVED EQUAL, SIZED ACCORDING TO MANUFACTURERS' RECOMMENDATIONS FOR CONNECTION TYPE AND LOADS ENCOUNTERED.
13. PROVIDE 5/8"ø ANCHOR BOLT W/ NUT & WASHER AT SILL PLATE. SEE SHEARWALL PLANS FOR ANCHOR BOLT SPACING. PROVIDE (2) A.B. MIN. PER SILL PLATE SEGMENT W/ (1) A.B. LOCATED @ 4" MIN. & 12" MAX. FROM ENDS.
14. ALL NAILS REFERENCED IN THE DRAWINGS (UNLESS NOTED OTHERWISE) ARE COMMON WIRE NAILS TO BE SIZED AS FOLLOWS:
    8d = 0.131"ø
    10d = 0.148"ø
    16d = 0.162"ø

TYP. STUD WALL SCHEDULE (U.N.O.)

WALL LEVEL	1ST FLOOR	2ND FLOOR
MAXIMUM WALL HEIGHT	10'–6"	10'–0"
TYP. EXTERIOR WALL	2x6 @ 16" O.C.	2x6 @ 16" O.C.
TYP. INTERIOR LOAD BEARING WALL	(2) 2x4 @ 16" O.C.	2x4 @ 16" O.C.
TYP. NON LOAD–BEARING	2x4 OR 2x6 @ 16" O.C.	2x4 OR 2x6 @ 24" O.C.

* DOUBLE STUDS REQUIRED AT SECOND FLOOR FOR STEEL ANGLE LINTEL ATTACHMENT.

STUD WALL SCHEDULE NOTES:

1. 2x4 AND 2x6 STUD MATERIAL:
   COMMERCIAL GRADE..... #2
   SPECIES..... SPRUCE–PINE–FIR
   GRADING RULES AGENCY..... NLGA
   MOISTURE CONTENT..... ≤ 19%
   (Fb=875 psi; Fc parallel=1150 psi; E=1400 ksi)
2. MID–POINT BLOCKING: AT FLOOR LOAD BEARING WALLS, A MINIMUM OF (1)2x4 STUD IS REQUIRED MID–WAY BETWEEN FLOOR TRUSSES IN WALLS WHERE TRUSSES ARE PERPENDICULAR TO WALLS. SEE FRAMING PLANS FOR TRUSS ORIENTATION.
3. LOAD BEARING STUD WALLS TO HAVE 2x DOUBLE TOP PLATES AND 2x SINGLE BOTTOM PLATES. MATERIAL FOR PLATES TO BE NO. 3 SOUTHERN PINE P.T. FOR SILL PLATE IN CONTACT WITH FOUNDATION, AND UTILITY GRADE OR BETTER SPRUCE–PINE–FIR FOR PLATES ABOVE GROUND LEVEL. ALL PLATES AT LOAD BEARING WALLS SHALL HAVE A MOISTURE CONTENT OF 15% OR LESS.
4. NON–LOAD BEARING WALLS THAT ARE NOT SHEAR WALLS SHALL BE UTILITY GRADE SPF OR BETTER @ 24" O.C. MAX. WITH SINGLE UTILITY TOP & SINGLE UTILITY BOTTOM PLATE. SILL PLATE IN CONTACT WITH FOUNDATION SHALL BE NO. 3 SOUTHERN PINE PT.
5. STUDS, STUD POSTS, AND OTHER WOOD POSTS SHOWN WITHIN STUD WALLS ARE DESIGNED WITH THE ASSUMPTION THAT SHEATHING (EITHER GYPSUM OR OSB/PLYWOOD) IS CONTINUOUSLY ATTACHED TO A MINIMUM OF (1) FACE OF EACH STUD OR POST, PERPENDICULAR TO THE PLANE OF THE WALL, PER THE INDICATED ATTACHMENT SPACING IN THE FINAL CONSTRUCTION. THE CONTRACTOR IS TO PROVIDE TEMPORARY BRACING UNTIL ALL ELEMENTS ARE IN PLACE (SEE WOOD NOTES 11/S0.0)
6. EACH LAYER OF MULTIPLE STUDS SHALL BE NAILED TO ADJACENT STUDS WITH 10d NAILS @ 8" O.C. STAGGERED. STUD POST SIZE SHALL MATCH STUD WALL SIZE, EXCEPT AS NOTED ON PLAN.
7. CUTTING, NOTCHING, AND BORING OF ALL LOAD BEARING STUDS SHALL NOT EXCEED A DEPTH OF 25% OF THE STUD WIDTH (5/8" FOR 2x4 STUDS, 1 3/8" FOR 2x6 STUDS), AND ALL AFFECTED STUDS SHALL BE REINFORCED WITH A SIMPSON SS STUD SHOE. NOTCHES OR BORED HOLES EXCEEDING 25% OF STUD WIDTH AND LESS THAN 50% SHALL BE REINFORCED WITH A SIMPSON HSS STUD SHOE. AS AN ALTERNATIVE TO USING STUD SHOES, AT ALL NOTCHED OR BORED STUDS THE NUMBER OF STUDS AT THE LOCATION OF THE NOTCHING OR BORING SHALL BE DOUBLED (≤ 25% NOTCH/BORED) OR TRIPLED (25%–50% NOTCH/BORED). ALL BORES SHOULD BE LOCATED AS CLOSE TO THE CENTERLINE OF THE STUD AS POSSIBLE. NO MORE THAN TWO SUCCESSIVE STUD GROUPS SHALL BE CUT, NOTCHED, OR BORED. CONTACT THE STRUCTURAL ENGINEER OF RECORD AT LOCATIONS REQUIRING LARGER NOTCHES OR BORES. POSTS SHALL NOT BE CUT, NOTCHED, OR BORED UNLESS SPECIFICALLY NOTED IN THESE DRAWINGS.

SHOP–FABRICATED WOOD TRUSSES:

1. TRUSSES SHALL BE DESIGNED IN ACCORDANCE WITH THE "NATIONAL DESIGN SPECIFICATION FOR WOOD CONSTRUCTION" AND THE "NATIONAL DESIGN STANDARD FOR METAL PLATE CONNECTED WOOD TRUSS CONSTRUCTION" BY THE TRUSS PLATE INSTITUTE.
2. TRUSS LAYOUT SHOWN IN THESE DRAWINGS IS PROVIDED FOR CONCEPTUAL DESIGN ONLY. THE MANUFACTURER AND DESIGNER SHALL SUBMIT SHOP DRAWINGS AND CALCULATIONS, BOTH SIGNED AND SEALED BY A LICENSED STRUCTURAL ENGINEER (STATE OF GEORGIA). SUBMITTALS SHALL BE MADE TO THE ARCHITECT AND ENGINEER FOR REVIEW AND, IF REQUIRED, TO THE LOCAL BUILDING OFFICIAL FOR APPROVAL PRIOR TO FABRICATION. SHOP DRAWINGS SHALL INCLUDE LAYOUT PLAN AND ALL CONNECTORS NOT SPECIFIED IN THESE DRAWINGS. CALCULATIONS SHALL BE BASED ON THE SPECIFIED LOADING CONDITIONS SHOWN HEREIN. THE MANUFACTURER SHALL PROVIDE ALL CONNECTIONS BETWEEN TRUSSES AND LOAD BEARING ELEMENTS. TRUSS FABRICATOR IS TO REVIEW AND APPROVE DIMENSIONS, SHAPES AND DETAILS SHOWN ON SHOP DRAWINGS PRIOR TO SUBMITTAL TO THE ARCHITECT AND ENGINEER FOR REVIEW AND COMMENT.
3. FLOOR TRUSSES SHALL BE DESIGNED FOR ALL LOADS IMPOSED, INCLUDING THOSE FROM LOAD BEARING WALLS ABOVE THAT LOAD THE TRUSSES IN A PARALLEL OR PERPENDICULAR MANNER. MULTIPLY TRUSSES (GIRDER TRUSSES) ARE TO BE PROVIDED WHERE A SINGLE TRUSS CAN NOT ADEQUATELY SUPPORT THE IMPOSED LOADS.
4. FLOOR AND ROOF TRUSSES SHALL BE SPACED AT 19.2" AND 24" O.C. RESPECTIVELY U.N.O. ON THE PLANS. PROVIDE MULTIPLE TRUSSES (GIRDER TRUSS) WHERE ONE TRUSS CANNOT SUPPORT THE SPECIFIED LOAD.
5. TRUSS MANUFACTURER AND DESIGNER SHALL PROVIDE HANGERS AND CONNECTORS THAT ARE NOT SPECIFIED ON THE DRAWINGS. CONNECTORS THAT ARE SPECIFIED HEREIN ARE BASED UPON SIMPSON "STRONG TIE" WOOD CONSTRUCTION CONNECTORS. SUBSTITUTIONS MAY BE MADE FOR EQUIVALENT PRODUCTS.
6. ROOF TRUSSES SHALL HAVE CONNECTORS AT EACH END TO RESIST UPLIFT FORCES. CONNECTORS ARE TO BE ATTACHED IN ACCORDANCE WITH THE MANUFACTURERS SPECIFICATIONS.
7. TRUSS CHORDS AND WEB MEMBERS SHALL BE 2x4 (MINIMUM) AND CONSISTENTLY SIZED THROUGHOUT PROJECT.
8. TRUSS DEFLECTION CRITERIA:
   ROOF TRUSSES: L/360 LIVE LOAD ONLY; L/240 TOTAL LOAD
   FLOOR TRUSSES: L/480 LIVE LOAD ONLY; L/360 TOTAL LOAD
9. TYPICAL TRUSS DESIGN LOADS (U.N.O.):
   FLOOR SYSTEM DEAD LOADS: 15 PSF TCDL 10 PSF BCDL
   FLOOR SYSTEM LIVE LOADS: SEE DESIGN LOAD TABLES

   ROOF SYSTEM DEAD LOADS: 10 PSF TCDL 10 PSF BCDL
   ROOF SYSTEM LIVE LOADS: 20 PSF TCLL
10. MECHANICAL EQUIPMENT MAY BE PRESENT. THE LOCATION, LOADS, AND METHODS OF ATTACHMENT FOR ALL EQUIPMENT SHALL BE COORDINATED WITH THE MECHANICAL, ELECTRICAL, AND PLUMBING DRAWINGS AND ACCOUNTED FOR BY THE TRUSS DESIGNER. TRUSS PLACEMENT AND GEOMETRY SHALL BE COORDINATED WITH ALL MEP DRAWINGS TO AVOID CONFLICT WITH ALL IN–FLOOR MECHANICAL LINES AND PLUMBING.
12. ALL REQUIRED TRUSS BRIDGING & BRACING SHALL BE SHOWN ON THE SHOP DRAWINGS PREPARED BY THE FABRICATOR & DESIGNER. SPECIFICATION SHALL BE IN ACCORDANCE WITH BCSI B1–2018 "THE GUIDE TO GOOD PRACTICE FOR HANDLING, INSTALLING, RESTRAINING AND BRACING OF METAL PLATE CONNECTED WOOD TRUSSES."
13. ALL TRUSS CONNECTOR PLATES SHALL BE MANUFACTURED FROM ASTM A446–72 GRADE A GALVANIZED STEEL OF NO LESS THAN 20 GAGE THICKNESS WITH A MINIMUM YIELD OF 33,000 PSI AND AN ULTIMATE TENSILE STRENGTH OF 45,000 PSI.
14. INSTALLATION OF ALL TRUSSES SHALL BE DONE USING A SPREADER BAR WITH A THREE POINT VERTICAL PICK. CARE SHALL BE USED IN LIFTING TO PREVENT HORIZONTAL BENDING.
15. IMPROPERLY HANDLED OR STORED TRUSSES, AS NOTED ABOVE AND IN THE SPECIFICATIONS, SHALL BE REMOVED FROM THE JOBSITE AND REPLACED AT THE EXPENSE OF THE CONTRACTOR.
16. NON–BEARING PARTITION WALLS SHALL NOT BE FRAMED TIGHT TO THE UNDERSIDE OF TRUSSES. PROVIDE 1/2" GAP WITH TRUSS DEFLECTION CLIPS OR SIMPSON SDPW SCREWS AT PERPENDICULAR WALLS AND DEFLECTION BLOCKING OR SIMPSON SDPW SCREWS @ 48" O.C. AT PARALLEL WALLS.
17. ALL PRE–ENGINEERED TRUSS SHOP DRAWINGS SHALL BE AVAILABLE ON THE JOB SITE DURING THE TIMES OF INSPECTION AND SHALL BEAR CLEAR INDICATION THAT THEY HAVE BEEN REVIEWED BY THE PROJECT STRUCTURAL ENGINEER–OF–RECORD.

JACK/KING STUD SCHEDULE

CALLOUT	STUDS	JACK STUD	KING STUD
P5	(5) GANGED STUDS	(3) STUDS	(2) STUDS
P4	(4) GANGED STUDS	(2) STUDS	(2) STUDS
P3	(3) GANGED STUDS	(2) STUDS	(1) STUD
P2	(2) GANGED STUDS	(1) STUD	(1) STUD

WOOD HEADER SCHEDULE

SPAN, LESS THAN	LOAD BEARING WALL	NON BEARING WALL	KING STUDS
2'–0"	(2) 2x8* OR (3) 2x6*	(2) 2x6* OR (3) 2x4*	(1)
4'–0"	(2) 2x10* OR (3) 2x8*	(2) 2x8* OR (3) 2x6*	(2)
6'–0"	(2) 7 1/4" LVL** OR (3) 2x12**	(2) 2x10* OR (3) 2x8*	(2)

NOTES:
1. PROVIDE FULL–HEIGHT KING STUDS TO MATCH THE NUMBER OF STUDS REPLACED BY THE OPENING, HALF (ROUND UP) PLACED ON EACH SIDE OF THE OPENING.
2. USE (2) PLY HEADER AT 2x4 WALLS AND (3) PLY HEADER AT 2x6 WALLS.
3. *(1) JACK STUD; **(2) JACK STUDS

DESIGN NOTES

REFERENCED CODES

INTERNATIONAL BUILDING CODE	IBC	2018
MINIMUM DESIGN LOADS	ASCE–7	2016
MASONRY STRUCTURES	ACI 530	2013
STRUCTURAL CONCRETE	ACI 318	2014
AISC	AISC 360	2016

LIVE LOADS

OCCUPANCY OR USE:	UNIFORM (PSF)	CONCENTRATED (LBS)
LAB/TREATMENT ROOM	60	1000
CORRIDORS (1ST/2ND)	100/80	2000
LOBBY/TRAINING/BREAK ROOM	100	–
STORAGE	100	1000
MECHANICAL ROOM	100	500
ROOF	20	–

WIND DESIGN CRITERIA

BASIC WIND SPEED (V_{ult}):	107 mph
FACTORED WIND SPEED (V_{asd}):	83 mph
RISK CATEGORY:	II
WIND EXPOSURE CLASSIFICATION:	B
INTERNAL PRESSURE COEFFICIENT:	±0.18

*REFER TO PROVIDED DIAGRAMS AND TABLES FOR COMPONENTS & CLADDING PRESSURES

SEISMIC DESIGN CRITERIA

RISK CATEGORY:	II
SEISMIC IMPORTANCE FACTOR (I_e):	I_e = 1.0
MAPPED SPECTRAL RESPONSE ACCELERATIONS:	S_S = 0.132g S_1 = 0.074g
SITE CLASS:	D (ASSUMED)
MAPPED SPECTRAL RESPONSE ACCELERATIONS:	S_{DS} = 0.141g S_{D1} = 0.118g
SEISMIC DESIGN CATEGORY:	B
BASIC SEISMIC–FORCE RESISTING SYSTEM(S):	LIGHT FRAMED WALLS SHEATHED WITH WOOD STRUCTURAL PANELS
DESIGN BASE SHEAR:	Fx = Fy = 10.3k
RESPONSE MODIFICATION FACTOR(S):	R = 6.5
ANALYSIS PROCEDURE:	EQUIVALENT LATERAL FORCE

SNOW DESIGN CRITERIA

FLAT ROOF SNOW LOAD; P_f	5.0 psf
SNOW EXPOSURE FACTOR; C_e	0.9
SLOPE FACTOR; C_s	1.0
SNOW IMPORTANCE FACTOR; I_s	1.0
THERMAL FACTOR; C_t	1.0
DESIGN FROST DEPTH	12"

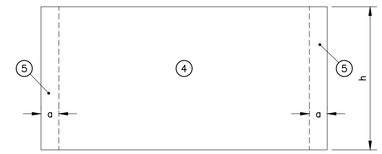

WALL ELEVATION

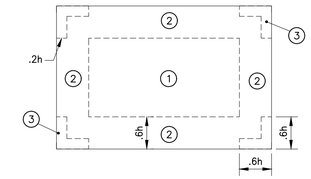

FLAT ROOF (GABLE ROOF WITH 0°<θ<7°)

COMPONENTS AND CLADDING PRESSURES, FLAT/HIP/GABLE ROOF (PSF)

ENCLOSED STRUCTURE; EXPOSURE 'B'; V_{ult}= 106 MPH; MEAN ROOF HEIGHT< 30 FT

Ae (EFFECTIVE AREA)	ZONE 1	ZONE 1'	ZONE 2	ZONE 3
ROOF PITCH 1:12 (0 TO 7 DEGREES)				
Ae = 10 SQ. FT.	+16.0, –32.2	+16.0, –18.5	+16.0, –42.5	+16.0, –57.9
Ae = 20 SQ. FT.	+16.0, –30.1	+16.0, –18.5	+16.0, –39.8	+16.0, –52.4
Ae = 50 SQ. FT.	+16.0, –27.8	+16.0, –18.5	+16.0, –36.2	+16.0, –45.3
Ae = 100 SQ. FT.	+16.0, –25.2	+16.0, –18.5	+16.0, –33.4	+16.0, –39.8

COMPONENTS AND CLADDING PRESSURES, WALLS (PSF)

ENCLOSED STRUCTURE; EXPOSURE 'B'; V_{ult} = 106 MPH; MEAN ROOF HEIGHT< 30 FT

Ae (EFFECTIVE AREA)	ZONE 4	ZONE 5
Ae = 10 SQ. FT.	+19.8, –21.5	+19.8, –26.6
Ae = 20 SQ. FT.	+18.9, –20.6	+18.9, –24.8
Ae = 50 SQ. FT.	+17.8, –19.4	+17.8, –22.4
Ae = 100 SQ. FT.	+16.9, –18.5	+16.9, –20.6

NOTES:
1. 'a'= VARIES BY BUILDING; 10% OF LEAST HORIZONTAL BUILDING DIMENSION OR 0.4h, WHICHEVER IS SMALLER. NOT TO BE TAKEN AS SMALLER THAN 4% OF LEAST HORIZONTAL BUILDING DIMENSION OR 3ft.
2. LOADS AND DIAGRAMS ARE BASED ON THE IBC 2018 AND ASCE 7–16. PRESSURES SHOWN ARE ULTIMATE LOADS. TO CONVERT TO ALLOWABLE (ASD) LOAD, MULTIPLY VALUES BY 0.6 FACTOR.
3. INTERPOLATION MAY BE UTILIZED FOR EFFECTIVE AREAS THAT OCCUR BETWEEN VALUES SHOWN IN THE TABLE.
4. 4. PLUS AND MINUS SIGN INDICATES THE PRESSURE ACTING TOWARDS AND AWAY FROM THE SURFACES, RESPECTIVELY.

STORY SHEAR VALUES, KIPS(1)

LEVEL	Fx (R=6.5)		Fy (R=6.5)	
	WIND (W)	SEISMIC (E)	WIND (W)	SEISMIC (E)
SECOND	13.0	5.3	26.6	5.3
FIRST (2)	22.5	10.3	48.1	10.3

1. STORY SHEAR LOAD VALUES ARE UN–FACTORED LOADS.
2. TOTAL SHEAR VALUE AT STRUCTURE BASE.

WIND STORY DRIFT, INCHES

LEVEL	Fx		Fy		WIND DRIFT LIMITED TO L/240	
	STORY	TOTAL	STORY	TOTAL	STORY	TOTAL
SECOND	0.21	0.47	0.22	0.49	0.5	1.0
FIRST	0.26	0.26	0.27	0.27	0.5	0.5

SEISMIC STORY DRIFT, INCHES

LEVEL	Fx (C_d=4)		Fy (C_d=4)		ALLOWABLE EQ. DRIFT, 0.020h_{sx}	
	STORY	TOTAL	STORY	TOTAL	STORY	TOTAL
SECOND	0.88	1.95	0.70	1.53	2.40	4.80
FIRST	1.07	1.07	0.83	0.83	2.40	2.40

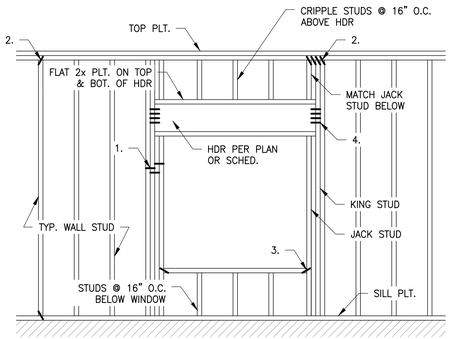

TYP. ATTACHMENTS

1. STUD TO STUD IN BUILT–UP STUD PACK, 10d NAILS @ 8" O.C. STAGGERED EA. PLY
2. STUD TO TOP & SILL PLATES, (4) 10d TOENAILS OR (2) 16d END NAILS
3. SILL TO JAMB STUD, (4) 10d TOENAILS OR (2) 16d END NAILS
4. JAMB STUD TO HDR, (4) 10d END NAILS EA. PLY

A / S–0.1 TYPICAL WALL FRAMING
SCALE: 1"=1"

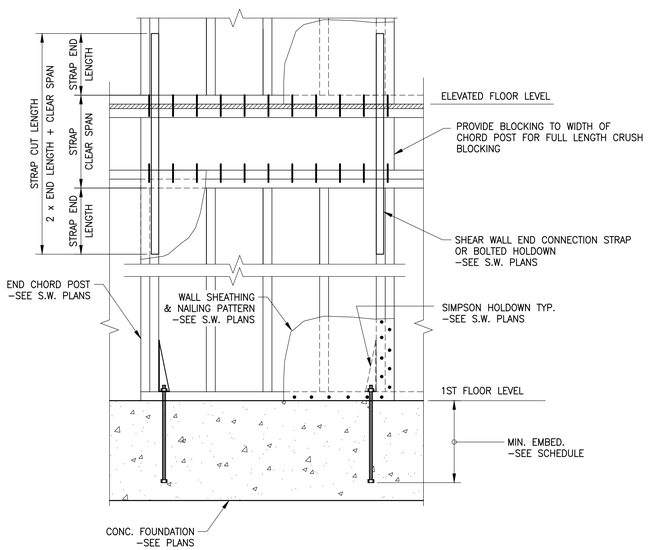

B / S–0.1 TYPICAL SHEAR WALL ELEVATION
SCALE: N.T.S.

GEORGIA REGISTERED No. PE044647 PROFESSIONAL ENGINEER JAMES T. BREEDEN 08-02-23

ISSUED FOR CONSTRUCTION

REV	DESCRIPTION	DRWN	APPR	DATE

HAMILTON DENTAL

GENERAL NOTES

SCALE: NOTED
DATE: 08/02/2023
DRWN. BY: JH
CHKD BY: JTB

Se Stability Engineering
1376 Church St, Ste 200, Decatur, GA 30030 Ph/Fax: 404-377-9316

SHEET NUMBER: S–0.1
PROJECT NO. SE#23244
SHT 2 OF 12
REV 0

23244–HAMILTON DENTAL.DWG

Wednesday, August 2, 2023 BY TRAVEON HARRIS

SCHEDULE OF SPECIAL INSPECTIONS SERVICES

PROJECT					
		APPLICABLE TO THIS PROJECT			
MATERIAL / ACTIVITY	SERVICE	Y/N	EXTENT	AGENT*	DATE COMPLETED
1705.1.1 Special Cases (work unusual in nature, including but not limited to alternative materials and systems, unusual design applications, materials and systems with special manufacturer's requirements - add additional rows as needed.)	Submittal review, shop (3) and/or field inspection	N			
1. Inspection of anchors post-installed in solid grouted masonry: Per research reports including verification of anchor type, anchor dimensions, hole dimensions, hole cleaning procedures, anchor spacing, edge distances, masonry unit, grout, masonry compressive strength, anchor embedment and tightening torque	Field inspection	N	Periodic or as required by the research report issued by an approved source		
2. Aggregate Pier Inspection: The special inspector's responsibilities include, but are not limited to, review of the aggregate pier designer's use of soil parameters as presented in the project soils report, and during construction, verification of aggregate properties, type and number of lifts of aggregate, hole size and depths and top elevations of the pier elements, and applied energy. Additionally, results of qualitative tests on production aggregate pier elements such as modulus load testing, uplift pull-out testing, bottom stabilization tests and dynamic cone penetration tests, shall be reviewed to verify compliance with design specifications.	Field inspection	N	Periodic or as required by the research report issued by an approved source		
3. Carbon fiber reinforcing strip materials: Verify application of product in accordance with approved submittals and manufacturer's specifications. Perform bond testing.	Field inspection	N	Periodic		
1705.2.1 Structural Steel Construction					
1. Fabricator and erector documents (Verify reports and certificates as listed in AISC 360, Section N 3.2 for compliance with construction documents)	Submittal Review	Y	Each submittal	1	
2. Material verification of structural steel	Shop (3) and field inspection	Y	Periodic	1	
3. Structural steel welding:					
a. Inspection tasks Prior to Welding (Observe, or perform for each welded joint or member, the QA tasks listed in AISC 360, Table N5.4-1)	Shop (3) and field inspection	N	Observe or Perform as noted (4)		
b. Inspection tasks During Welding (Observe, or perform for each welded joint or member, the QA tasks listed in AISC 360, Table N5.4-2)	Shop (3) and field inspection	N	Observe (4)		
c. Inspection tasks After Welding (Observe, or perform for each welded joint or member, the QA tasks listed in AISC 360, Table N5.4-3)	Shop (3) and field inspection	Y	Observe or Perform as noted (4)	1	
d. Nondestructive testing (NDT) of welded joints: *see Comments*		N			
1) Complete penetration groove welds 5/16" or greater in *risk category III or IV*	Shop (3) or field ultrasonic testing - 100%	N	Periodic		
2) Complete penetration groove welds 5/16" or greater in *risk category* II	Shop (3) or field ultrasonic testing - 10% of welds minimum	N	Periodic		
3) Welded joints subject to fatigue when required by AISC 360, Appendix 3, Table A-3.1	Shop (3) or field radiographic or Ultrasonic testing	N	Periodic		
4) Fabricator's NDT reports when fabricator performs NDT	Verify reports	N	Each submittal (5)		
4. Structural steel bolting:	Shop (3) and field inspection				
a. Inspection tasks Prior to Bolting (Observe, or perform tasks for each bolted connection, in accordance with QA tasks listed in AISC 360, Table N5.6-1)		N	Observe or Perform as noted (4)		
b. Inspection tasks During Bolting (Observe the QA tasks listed in AISC 360, Table N5.6-2)		N	Observe (4)		
1) Pre-tensioned and slip-critical joints					
a) Turn-of-nut with matching markings		N	Periodic		
b) Direct tension indicator		N	Periodic		
c) Twist-off type tension control bolt		N	Periodic		
d) Turn-of-nut without matching markings		N	Continuous		
e) Calibrated wrench		N	Continuous		
2) Snug-tight joints		N	Periodic		
c. Inspection tasks After Bolting (Perform tasks for each bolted connection in accordance with QA tasks listed in AISC 360, Table N5.6-3)		Y	Perform (4)	1	

SCHEDULE OF SPECIAL INSPECTIONS SERVICES

PROJECT					
		APPLICABLE TO THIS PROJECT			
MATERIAL / ACTIVITY	SERVICE	Y/N	EXTENT	AGENT*	DATE COMPLETED
5. Visual inspection of exposed cut surfaces of galvanized structural steel main members and exposed corners of the rectangular HSS for cracks subsequent to galvanizing	Shop (3) or field inspection	N	Periodic		
6. Embedments (Verify diameter, grade, type, length, embedment. See 1705.3 for anchors)	Field inspection	Y	Periodic	1	
7. Verify member locations, braces, stiffeners, and application of joint details at each connection comply with construction documents	Field inspection	N	Periodic		
1705.2.2 Cold-Formed Steel Deck					
1. Manufacturer documents (Verify reports and certificates as listed in SDI QA/QC, Section 2, Paragraphs 2.1 and 2.2 for compliance with construction documents)	Submittal Review	N	Each submittal		
2. Material verification of steel deck, mechanical fasteners and welding materials	Shop (3) and field inspection	N	Periodic		
3. Cold-formed steel deck placement:	Shop (3) and field inspection	N			
a. Inspection tasks Prior to Deck Placement (Perform the QA tasks listed in SDI QA/QC, Appendix 1 Table 1.1)		N	Perform (4)		
b. Inspection tasks After Deck Placement (Perform the QA tasks listed in SDI QA/QC, Appendix 1 Table 1.2)		N	Perform (4)		
4. Cold-formed steel deck welding:	Shop (3) and field inspection				
a. Inspection tasks Prior to Welding (Observe the QA tasks listed in SDI QA/QC, Appendix 1 Table 1.3)		N	Observe (4)		
b. Inspection tasks During Welding (Observe the QA tasks listed in SDI QA/QC, Appendix 1 Table 1.4)		N	Observe (4)		
c. Inspection tasks After Welding (Perform the QA tasks listed in SDI QA/QC, Appendix 1 Table 1.5)		N	Perform (4)		
5. Cold-formed steel deck mechanical fastening:	Shop (3) and field inspection				
a. Inspection tasks Prior to Mechanical Fastening (Observe the QA tasks listed in SDI QA/QC, Appendix 1 Table 1.6)		N	Observe (4)		
b. Inspection tasks During Mechanical Fastening (Observe the QA tasks listed in SDI QA/QC, Appendix 1 Table 1.7)		N	Observe (4)		
c. Inspection tasks After Mechanical Fastening (Perform the QA tasks listed in SDI QA/QC, Appendix 1 Table 1.8)		N	Perform (4)		
1705.2.3. Open-Web Steel Joists and Joist Girders					
1. Installation of open-web steel joists and joist girders.					
a. End connections - welding or bolted.	per SJI CJ or SJI 100	N	Periodic		
b. Bridging - horizontal or diagonal.					
1) Standard bridging.	per SJI CJ or SJI 100	N	Periodic		
2) Bridging that differs from the specifications listed in SJI CJ or SJI 100.		N	Periodic		
1705.2.4. Cold-Formed Steel Trusses Spanning 60 feet or Greater					
Verify temporary and permanent restraint/bracing are installed in accordance with the approved truss submittal package	Field inspection	N	Periodic		
1705.3 Concrete Construction					
1. Inspection and placement verification of reinforcing steel and prestressing tendons.	Shop (3) and field inspection	Y	Periodic	1	
2. Reinforcing bar welding:					
a. Verification of weldability of bars other than ASTM A706.		N	Periodic		
b. Inspection of single-pass fillet welds 5/16 or less in size.		N	Periodic		
c. Inspection of all other welds.		N	Continuous		
3. Inspection of anchors cast in concrete.	Shop (3) and field inspection	Y	Periodic	1	
4. Inspection of anchors post-installed in hardened concrete members per research reports, or, if no specific requirements are provided, requirements shall be provided by the registered design professional and approved by the building official, including verification of anchor type, anchor dimensions, hole dimensions, hole cleaning procedures, anchor spacing, edge distances, concrete minimum thickness, anchor embedment and tightening torque	Field inspection	N	Periodic or as required by the research report issued by an approved source		

SCHEDULE OF SPECIAL INSPECTIONS SERVICES

PROJECT					
		APPLICABLE TO THIS PROJECT			
MATERIAL / ACTIVITY	SERVICE	Y/N	EXTENT	AGENT*	DATE COMPLETED
a. Adhesive anchors installed in horizontal or upward-inclined orientation that resist sustained tension loads.		N	Continuous		
b. Mechanical and adhesive anchors not defined in 4a.		N	Periodic		
5. Verify use of approved design mix	Shop (3) and field inspection	Y	Periodic	1	
6. Prior to placement, fresh concrete sampling, perform slump and air content tests and determine temperature of concrete and perform any other tests as specified in construction documents.	Shop (3) and field inspection	N	Continuous		
7. Inspection of concrete and shotcrete placement for proper application techniques	Shop (3) and field inspection	N	Continuous		
8. Verify maintenance of specified curing temperature and techniques	Shop (3) and field inspection	N	Periodic		
9. Inspection of prestressed concrete:	Shop (3) and field inspection	N			
a. Application of prestressing force		N	Continuous		
b. Grouting of bonded prestressing tendons		N	Continuous		
10. Inspect erection of precast concrete members		N	Periodic		
11. Verification of in-situ concrete strength, prior to stressing of tendons in post tensioned concrete and prior to removal of shores and forms from beams and structural slabs	Review field testing and laboratory reports	N	Periodic		
12. Inspection of formwork for shape, lines, location and dimensions	Field inspection	Y	Periodic	1	
13. Concrete strength testing and verification of compliance with construction documents	Field testing and review of laboratory reports	N	Periodic		
1705.4 Masonry Construction					
MINIMUM VERIFICATION REQUIREMENTS					
(A) Level 1, 2 and 3 Quality Assurance:					
1. Prior to construction, verification of compliance of submittals	Submittal Review	N	Prior to Construction		
(B) Level 2 & 3 Quality Assurance:					
1. Prior to construction verification of f'm and f'_{AAC} except where specifically required by the code	Testing by unit strength method or prism test method	N	Prior to Construction		
2. During construction, verification of Slump Flow and Visual Stability Index (VSI) when self-consolidating grout is delivered to project site.	Testing by unit strength method or prism test method	N	Periodic		
(C) Level 3 Quality Assurance:					
1. During construction, verification of f'm and f'_{AAC} for every 5,000 SF	Testing by unit strength method or prism test method	N	Periodic		
2. During construction, verification of proportions of materials as delivered to the project site for premixed or preblended mortar, prestressing grout, and grout other than self-consolidating grout.	Field inspection	N	Periodic		
MINIMUM SPECIAL INSPECTION REQUIREMENTS					
(D) Levels 2 and 3 Quality Assurance:					
1. As masonry construction begins, verify that the following are in compliance:					
a. Proportions of the site-prepared mortar	Field inspection	N	Periodic		
b. Grade and size of prestressing tendons and anchorages	Field Inspection	N	Periodic		
c. Grade, type, and size of reinforcement, anchor bolts, and prestressing tendons and anchorages	Field Inspection	N	Periodic		
d. Prestressing technique	Field Inspection	N	Periodic		
e. Properties of thin-bed mortar for AAC masonry (b) Required for the first 5,000 square feet (c) Required after the first 5,000 square feet	Field Inspection	N	Level 2 - Continuous[(b)] Level 2 - Periodic[(c)]		
f. Sample panel construction	Field Inspection	N	Level 3 - Continuous		
2. Prior to grouting, verify that the following are in compliance:					
a. Grout space	Field Inspection	N	Level 2 - Periodic		
b. Placement of prestressing tendons and anchorages	Field Inspection	N	Level 3 - Continuous		
c. Placement of reinforcement, connectors, and anchor bolts	Field Inspection	N	Level 2 - Periodic		
d. Proportions of site-prepared grout and prestressing grout for bonded tendons	Field Inspection	N	Level 3 - Continuous		
3. Verify compliance of the following during construction:					
a. Materials and procedures with the approved submittals	Field Inspection	N	Periodic		
b. Placement of masonry units and mortar joint construction	Field Inspection	N	Periodic		

SCHEDULE OF SPECIAL INSPECTIONS SERVICES

PROJECT					
		APPLICABLE TO THIS PROJECT			
MATERIAL / ACTIVITY	SERVICE	Y/N	EXTENT	AGENT*	DATE COMPLETED
c. Size and location of structural members	Field inspection	N	Periodic		
d. Type, size, location of anchors, including other details of anchorage of masonry to structural members, frames, or other construction	Field inspection	N	Level 2 - Periodic Level 3 - Continuous		
e. Welding of reinforcement	Field inspection	N	Continuous		
f. Preparation, construction, and protection of masonry during cold weather (temperature below 40°F) or hot weather (temperature above 90°F)	Field inspection	N	Periodic		
g. Application and measurement of prestressing force	Field testing	N	Continuous		
h. Placement of grout and prestressing grout for bonded tendons is in compliance	Field inspection	N	Continuous		
i. Placement of AAC masonry units and construction of thin-bed mortar joints (b) Required for the first 5,000 square feet (c) Required after the first 5,000 square feet	Field inspection	N	Level 2 - Continuous[(b)] Level 2 - Periodic[(c)]		
		N	Level 3 - Continuous		
4. Observe preparation of grout specimens, mortar specimens, and/or prisms	Field inspection	N	Level 2 - Periodic		
		N	Level 3 - Continuous		
1705.5 Wood Construction					
1. For prefabricated wood structural elements, inspection of the fabrication process and assemblies in accordance with Section 1704.2.5.	In-plant review (3)	Y	Periodic	1	
2. For high-load diaphragms, verify grade and thickness of structural panel sheathing agree with approved building plans	Field inspection	N	Periodic		
3. For high-load diaphragms, verify nominal size of framing members at adjoining panel edges, nail or staple diameter and length, number of fastener lines, and that spacing between fasteners in each fine and at edge margins and verify drag strut and straps agree with approved building plans	Field inspection	N	Periodic		
4. Metal-plate-connected wood trusses:		N			
a. Verification that permanent individual truss member restraint/bracing has been installed in accordance with the approved truss submittal package when the truss height is greater than or equal to 60".	Field inspection	N	Periodic		
b. For trusses spanning 60 feet or greater: verify temporary and permanent restraint/bracing are installed in accordance with the approved truss submittal package	Field inspection	N	Periodic		
1705.6 Soils					
1. Verify materials below shallow foundations are adequate to achieve the design bearing capacity.	Field inspection	Y	Periodic	1	
2. Verify excavations are extended to proper depth and have reached proper material.	Field inspection	Y	Periodic	1	
3. Perform classification and testing of compacted fill materials.	Field inspection	N	Periodic		
4. Verify use of proper materials, densities, and lift thicknesses during placement and compaction of controlled fill	Field inspection	N	Continuous		
5. Prior to placement of controlled fill, inspect subgrade and verify that site has been prepared properly	Field inspection	Y	Periodic	1	
1705.7 Driven Deep Foundations					
1. Verify element materials, sizes and lengths comply with requirements	Field inspection	N	Continuous		
2. Determine capacities of test elements and conduct additional load tests, as required	Field inspection	N	Continuous		
3. Inspect driving operations and maintain complete and accurate records for each element	Field inspection	N	Continuous		
4. Verify placement locations and plumbness, confirm type and size of hammer, record number of blows per foot of penetration, determine required penetrations to achieve design capacity, record tip and butt elevations and document any damage to foundation element	Field inspection	N	Continuous		
5. For steel elements, perform additional inspections per Section 1705.2	See Section 1705.2	N	See Section 1705.2		
6. For concrete elements and concrete-filled elements, perform tests and additional inspections per Section 1705.3	See Section 1705.3	N	See Section 1705.3		
7. For specialty elements, perform additional inspections as determined by the registered design professional in responsible charge	Field inspection	N	In accordance with construction documents		

SCHEDULE OF SPECIAL INSPECTIONS SERVICES

PROJECT					
		APPLICABLE TO THIS PROJECT			
MATERIAL / ACTIVITY	SERVICE	Y/N	EXTENT	AGENT*	DATE COMPLETED
1705.8 Cast-in-Place Deep Foundations					
1.Inspect drilling operations and maintain complete and accurate records for each element	Field inspection	N	Continuous		
2. Verify placement locations and plumbness, confirm element diameters, bell diameters (if applicable), lengths, embedment into bedrock (if applicable) and adequate end-bearing strata capacity. Record concrete or grout volumes.	Field inspection	N	Continuous		
3. For concrete elements, perform tests and additional inspections in accordance with Section 1705.3	See Section 1705.3	N	See Section 1705.3		
1705.9 Helical Pile Foundations					
Verify installation equipment, pile dimensions, tip elevations, final depth, final installation torque and other installation data as required by construction documents.	Field inspection	N	Continuous		
1705.10 Fabricated items					
1. List of fabricated items requiring special inspection during fabrication:	Shop inspection	N	As noted in each applicable shop activity		
2. List of fabricated items to be fabricated on the premises of a fabricator approved to perform such work without special inspection (including name of approved agency providing periodic auditing).		N			
1705.11.1 Structural Wood Special Inspections For Wind Resistance					
1. Inspection of field gluing operations of elements of the main windforce-resisting system	Field inspection	N	Continuous		
2. Inspection of nailing, bolting, anchoring and other fastening of components within the main windforce-resisting system, including wood shear walls, wood diaphragms, drag struts, braces and hold-downs.	Shop (3) and field inspection	N	Periodic		
1705.11.2 Cold-formed Steel Special Inspections For Wind Resistance					
1.Inspection during welding operations of elements of the main windforce-resisting system	Shop (3) and field inspection	N	Periodic		
2. Inspection of screw attachment, bolting, anchoring and other fastening of components within the main windforce-resisting system, including shear walls, braces, diaphragms, collectors (drag struts) and hold-downs.	Shop (3) and field inspection	N	Periodic		
1705.11.3 Wind-resisting Components					
1. Roof covering, roof deck and roof framing connections.	Shop (3) and field inspection	N	Periodic		
2. Exterior wall covering and wall connections to roof and floor diaphragms.	Shop (3) and field inspection	N	Periodic		
1705.12.1 Structural Steel Special Inspections for Seismic Resistance					
1. Seismic force-resisting systems in SDC B, C, D, E, or F.	Shop (3) and field inspection	N	In accordance with AISC 341		
2. Structural steel elements in SDC B, C, D, E, or F other than those in Item 1. including struts, collectors, chords and foundation elements.	Shop (3) and field inspection	N	In accordance with AISC 341		
1705.12.2 Structural Wood Special Inspections for Seismic Resistance					
1. Field gluing operations of elements of the seismic-force resisting system for SDC C, D, E or F.	Field inspection	N	Continuous		
2. Nailing, bolting, anchoring and other fastening of components within the seismic-force-resisting system including wood shear walls, wood diaphragms, drag struts, shear panels and hold-downs for SDC C, D, E or F.	Shop (3) and field inspection	N	Periodic		
1705.12.3 Cold-formed Steel Light-Frame Construction Special Inspections for Seismic Resistance					
1. During welding operations of elements of the seismic-force-resisting system for SDC C, D, E or F.	Shop (3) and field inspection	N	Periodic		
2. Screw attachment, bolting, anchoring and other fastening of components within the seismic-force-resisting system including shear walls, braces, diaphragms, collectors (drag struts) and hold-downs for SDC C, D, E or F.	Shop (3) and field inspection	N	Periodic		
1705.12.4 Designated Seismic Systems Verification Special Inspections for Seismic Resistance					
For SDC C, D, E or F, inspect and verify that that the component label, anchorage or mounting conforms to the certificate of compliance in accordance with ASCE 7 Section 13.2.2.	Field inspection	N	Periodic		

SCHEDULE OF SPECIAL INSPECTIONS SERVICES

PROJECT					
		APPLICABLE TO THIS PROJECT			
MATERIAL / ACTIVITY	SERVICE	Y/N	EXTENT	AGENT*	DATE COMPLETED
1705.12.5 Architectural Components Special Inspections for Seismic Resistance					
1. For SDC D, E or F, inspection during the erection and fastening of exterior cladding and interior or exterior veneer more than 30 feet above grade or walking surface and weighing more than 5 psf.	Field inspection	N	Periodic		
2. For SDC D, E or F, inspection during the erection and fastening of interior nonbearing walls more than 30 feet above grade or walking surface and weighing more than 15 psf.	Field inspection	N	Periodic		
3. For SDC D, E or F, inspection during the erection and fastening of exterior nonbearing walls more than 30 feet above grade or walking surface.		N			
4. For SDC D, E or F, inspection during anchorage of access floors	Field inspection	N	Periodic		
1705.12.6 Plumbing, Mechanical and Electrical Components Special Inspections for Seismic Resistance					
1. Inspection during the anchorage of electrical equipment for emergency or standby power systems in SDC C, D, E or F	Field inspection	N	Periodic		
2. Inspection during the anchorage of other electrical equipment in SDC E or F	Field inspection	N	Periodic		
3. Inspection during installation and anchorage of piping systems designed to carry hazardous materials, and their associated mechanical units in SDC C, D, E or F	Field inspection	N	Periodic		
4. Inspection during the installation and anchorage of HVAC ductwork designed to contain hazardous materials in SDC C, D, E or F	Field inspection	N	Periodic		
5. Inspection during the installation and anchorage of vibration isolation systems in SDC C, D, E or F where nominal clearance of 1/4 inch or less is required by the approved construction documents	Field inspection	N	Periodic		
6. Inspection during installation of mechanical and electrical equipment, including duct work, piping systems and their structural supports, where automatic fire sprinkler systems are installed in structures assigned to SDC C, D, E, or F to verify one of the following unless flexible sprinkler hose fittings are used:					
a. ASCE/SEI 7, Section 13.2.3 minimum required clearances have been provided.	Field inspection	N	Periodic		
b. A three inch or greater nominal clearance has been provided between fire protection sprinkler system drops and sprigs and: structural members not used collectively or independently to support the sprinklers; equipment attached to the building structure; and other systems' piping.	Field inspection	N	Periodic		
1705.12.7 Storage Racks Special Inspections for Seismic Resistance					
Inspection during the anchorage of storage racks 8 feet or greater in height in structures assigned to SDC D, E or F	Field inspection	N	Periodic		
1705.12.8 Seismic Isolation Systems					
Inspection during the fabrication and installation of isolator units and energy dissipation devices used as part of the seismic isolation system in structures assigned to SDC B, C, D, E or F.	Shop and field inspection	N	Periodic		
1705.12.9 Cold-formed Steel Special Bolted Moment Frames					
Inspection of installation of cold-formed steel special bolted moment frames in the seismic force-resisting systems in structures assigned to SDC D, E or F.	Field inspection	N	Periodic		
1705.13.1 Structural Steel Testing for Seismic Resistance					
1. Nondestructive testing of structural steel in the seismic force-resisting systems in accordance with AISC 341 in structures assigned to SDC B, C, D, E or F.	Field test	N	Periodic		
2. Nondestructive testing of structural steel elements in the seismic force-resisting systems not covered in 1 above including struts, collectors, chords and foundation elements in accordance with AISC 341 in structures assigned to SDC B, C, D, E or F.	Field test	N	Periodic		

SCHEDULE OF SPECIAL INSPECTIONS SERVICES

PROJECT					
		APPLICABLE TO THIS PROJECT			
MATERIAL / ACTIVITY	SERVICE	Y/N	EXTENT	AGENT*	DATE COMPLETED
1705.13.2 Seismic Certification of Nonstructural Components					
Review certificate of compliance for designated seismic system components in structures assigned to SDC B, C, D, E or F.	Certificate of compliance review	N	Each submittal		
1705.13.3 Seismic Certification of Designated Seismic Systems					
Review certificate of compliance for designated seismic system components in structures assigned to SDC C, D, E or F	Certificate of compliance review	N	Each submittal		
1705.13.4 Seismic Isolation Systems					
Test seismic isolation system in accordance with ASCE 7 Section 17.8 in structures assigned to SDC B, C, D, E or F.	Prototype testing	N	Per ASCE 7		
1705.14 Sprayed Fire-resistant Materials					
1. Verify surface condition preparation of structural members	Field inspection	N	Periodic		
2. Verify minimum thickness of sprayed fire-resistant materials applied to structural members	Field inspection	N	Periodic		
3. Verify density of the sprayed fire-resistant material complies with approved fire-resistant design	Field inspection and testing	N	Per IBC Section 1705.14.5		
4. Verify the cohesive/adhesive bond strength of the cured sprayed fire-resistant material	Field inspection and testing	N	Per IBC Section 1705.14.6		
5. Condition of finished application	Field inspection	N	Periodic		
1705.15 Mastic and Intumescent Fire-Resistant Coatings					
Inspect and test mastic and intumescent fire-resistant coatings applied to structural elements and decks per AWCI 12-B	Field inspection and testing	N	Periodic		
1705.16 Exterior Insulation and Finish Systems (EIFS)					
Inspection of water-resistive barrier over sheathing substrate	Field inspection	N	Periodic		
1705.17 Fire-Resistant Penetrations and Joints					
1. Inspect penetration firestop systems	Field testing	N	Per ASTM E2174		
2. Inspect fire-resistant joint systems	Field testing	N	Per ASTM E2393		
1705.18 Smoke Control Systems					
1. Leakage testing and recording of device locations prior to concealment	Field testing	N	Periodic		
2. Prior to occupancy and after sufficient completion, pressure difference testing, flow measurements, and detection and control verification	Field testing	N	Periodic		

* INSPECTION AGENTS		
FIRM	ADDRESS	TELEPHONE NO.
1. Nova Engineering	4543 Atwater Court, Suite 104, Buford, GA 30518	678 482 4481

Notes: 1. The inspection and testing agent(s) shall be engaged by the Owner or the Owner's Agent, and not by the Contractor or Subcontractor whose work is to be inspected or tested. Any conflict of interest must be disclosed to the Building Official prior to commencing work. The qualifications of the Special Inspector(s) and/or testing agencies may be subject to the approval of the Building Official and/or the Design Professional.

2. The list of Special Inspectors may be submitted as a separate document, if noted so above.

3. Shop Inspections of fabricated items are not required where the fabricator is approved in accordance with IBC Section 1704.2.5.1 and listed in activity 1709.2.

4. Observe: Observe on a random basis, operations need not be delayed pending these inspections. Perform: These tasks shall be performed for each welded joint, bolted connection, or steel element.

5. NDT of welds completed in an approved fabricator's shop may be performed by that fabricator when approved by the AHJ. Refer to AISC 360, N6.

Are Special Inspections for Seismic Resistance included in the Statement of Special Inspections? **No**

Are Special Inspections for Wind Resistance included in the Statement of Special Inspections? **No**

DATE: 8/2/2023

GEORGIA REGISTERED PROFESSIONAL ENGINEER No. PE044647 08-02-23 JAMES T. BREEDEN

ISSUED FOR CONSTRUCTION

23244—HAMILTON DENTAL.DWG

Wednesday, August 2, 2023 BY TRAVEON HARRIS

REV	DESCRIPTION	DRWN	APPR	DATE

HAMILTON DENTAL

SPECIAL INSPECTIONS SCHEDULE

SCALE: NOTED
DATE: 08/02/2023
DRWN BY: JH
CHKD BY: JTB

Se Stability Engineering
1376 Church St, Ste 200, Decatur, GA 30030 Ph/Fax: 404-377-9316

SHEET NUMBER: S-0.2
PROJECT NO: SE#23244
SHT 3 OF 12
REV 0

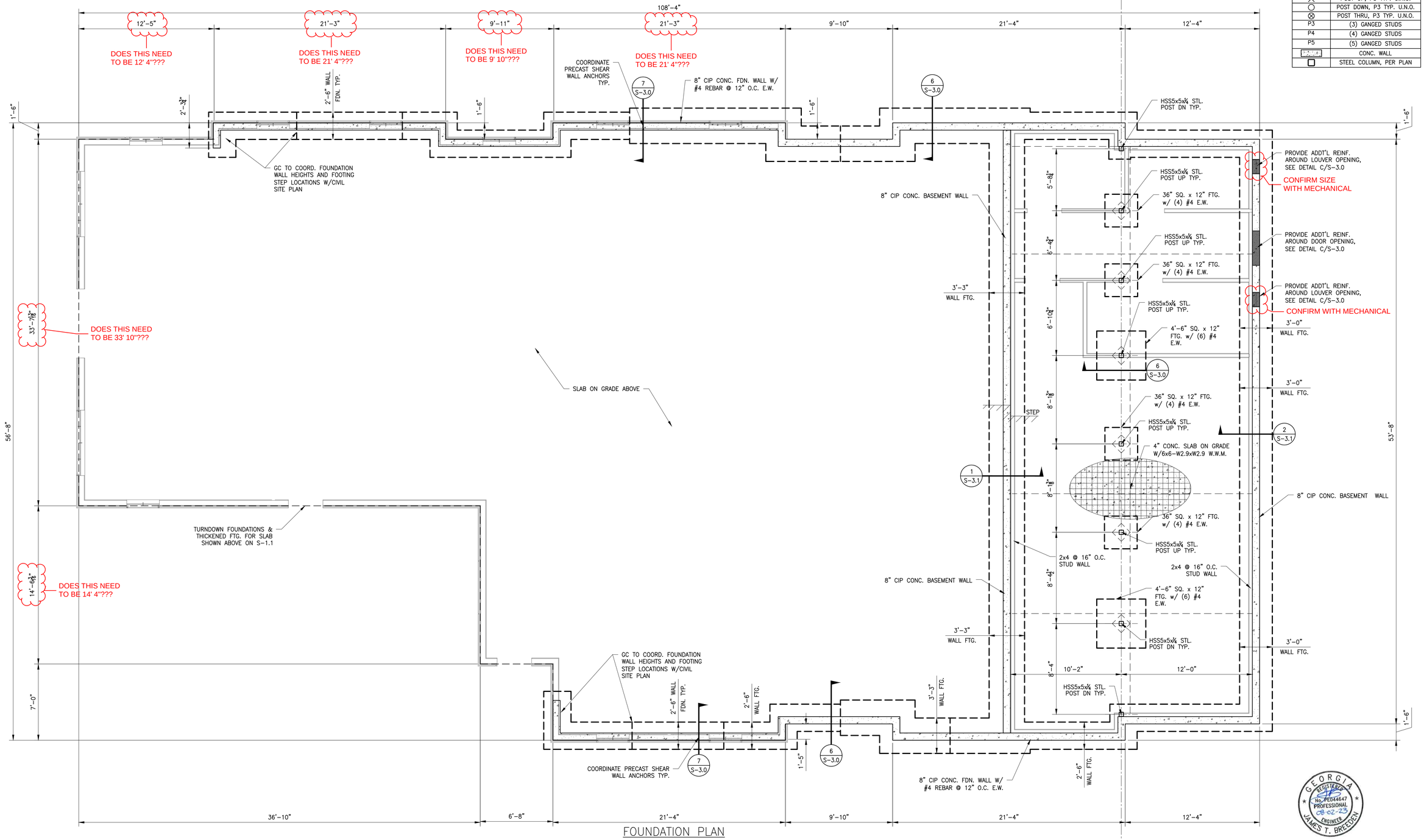

FOUNDATION PLAN

SCALE: ¼"=1'-0"

NOTES:

1. SEE S-0.0 FOR GENERAL NOTES.
2. ARCH. BACKGROUNDS SHOWN FOR GENERAL INFORMATION ONLY. SEE ARCH. FOR EXACT WALL LOCATIONS, DIMENSIONING AND OTHER INFORMATION NOT SHOWN.
3. ALL DIMENSIONS ARE TO FACE OF WALL. ALL DIMENSIONS ARE FOR REFERENCE ONLY.

LEGEND	
╳	POST UP, P3 TYP. U.N.O.
○	POST DOWN, P3 TYP. U.N.O.
⊗	POST THRU, P3 TYP. U.N.O.
P3	(3) GANGED STUDS
P4	(4) GANGED STUDS
P5	(5) GANGED STUDS
	CONC. WALL
	STEEL COLUMN, PER PLAN

23244-HAMILTON DENTAL.DWG

GEORGIA REGISTERED PROFESSIONAL ENGINEER No. PE044647 08-02-23 JAMES T. BREEDEN

ISSUED FOR CONSTRUCTION

Wednesday, August 2, 2023 BY TRAVEON HARRIS

REV	DESCRIPTION	DRWN	APPR	DATE

HAMILTON DENTAL

BASEMENT PLAN

SCALE: NOTED
DATE: 08/02/2023
DRWN BY: JH
CHKD BY: JTB

Se Stability Engineering
1376 Church St, Ste 200, Decatur, GA 30030 Ph/Fax: 404-377-9316

SHEET NUMBER: S-1.0
PROJECT NO. SE#23244
SHT 4 OF 12
REV 0

LEGEND	
╳	POST UP, P3 TYP. U.N.O.
○	POST DOWN, P3 TYP. U.N.O.
⊗	POST THRU, P3 TYP. U.N.O.
P3	(3) GANGED STUDS
P4	(4) GANGED STUDS
P5	(5) GANGED STUDS
	CONC. WALL
	LOAD BEARING WALL
	STL COLUMN, PER PLAN

23244-HAMILTON DENTAL.DWG

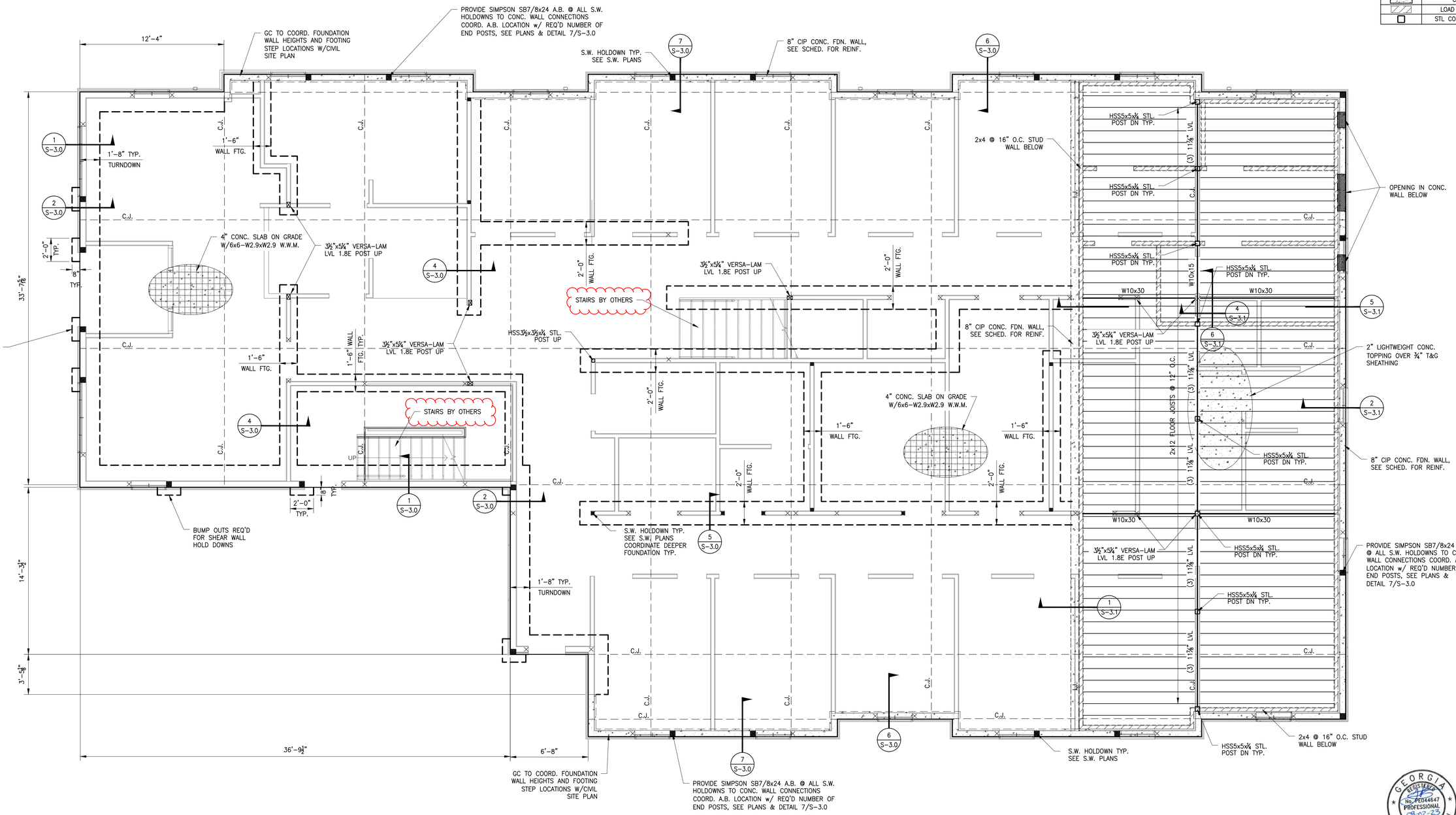

FIRST FLOOR PLAN

SCALE: ¼"=1'-0"

NOTES:

1. SEE S-0.0 FOR GENERAL NOTES.
2. ARCH. BACKGROUNDS SHOWN FOR GENERAL INFORMATION ONLY. SEE ARCH. FOR EXACT WALL LOCATIONS, DIMENSIONING AND OTHER INFORMATION NOT SHOWN.

GEORGIA REGISTERED PROFESSIONAL ENGINEER No. PE044647 08-02-23 JAMES T. BREEDEN

ISSUED FOR CONSTRUCTION

Wednesday, August 2, 2023 BY TRAVEON HARRIS

REV	DESCRIPTION	DRWN	APPR	DATE

HAMILTON DENTAL

FIRST FLOOR PLAN

SCALE: NOTED
DATE: 08/02/2023
DRWN. BY: JH
CHKD BY: JTB

Se Stability Engineering
1376 Church St, Ste 200, Decatur, GA 30030 Ph/Fax: 404-377-9316

SHEET NUMBER: S-1.1
PROJECT NO. SE#23244
SHT 5 OF 12
REV 0

LEGEND	
╳	POST UP, P3 TYP. U.N.O.
○	POST DOWN, P3 TYP. U.N.O.
⊗	POST THRU, P3 TYP. U.N.O.
P3	(3) GANGED STUDS
P4	(4) GANGED STUDS
P5	(5) GANGED STUDS
▨	LOAD BEARING WALL

23244–HAMILTON DENTAL.DWG

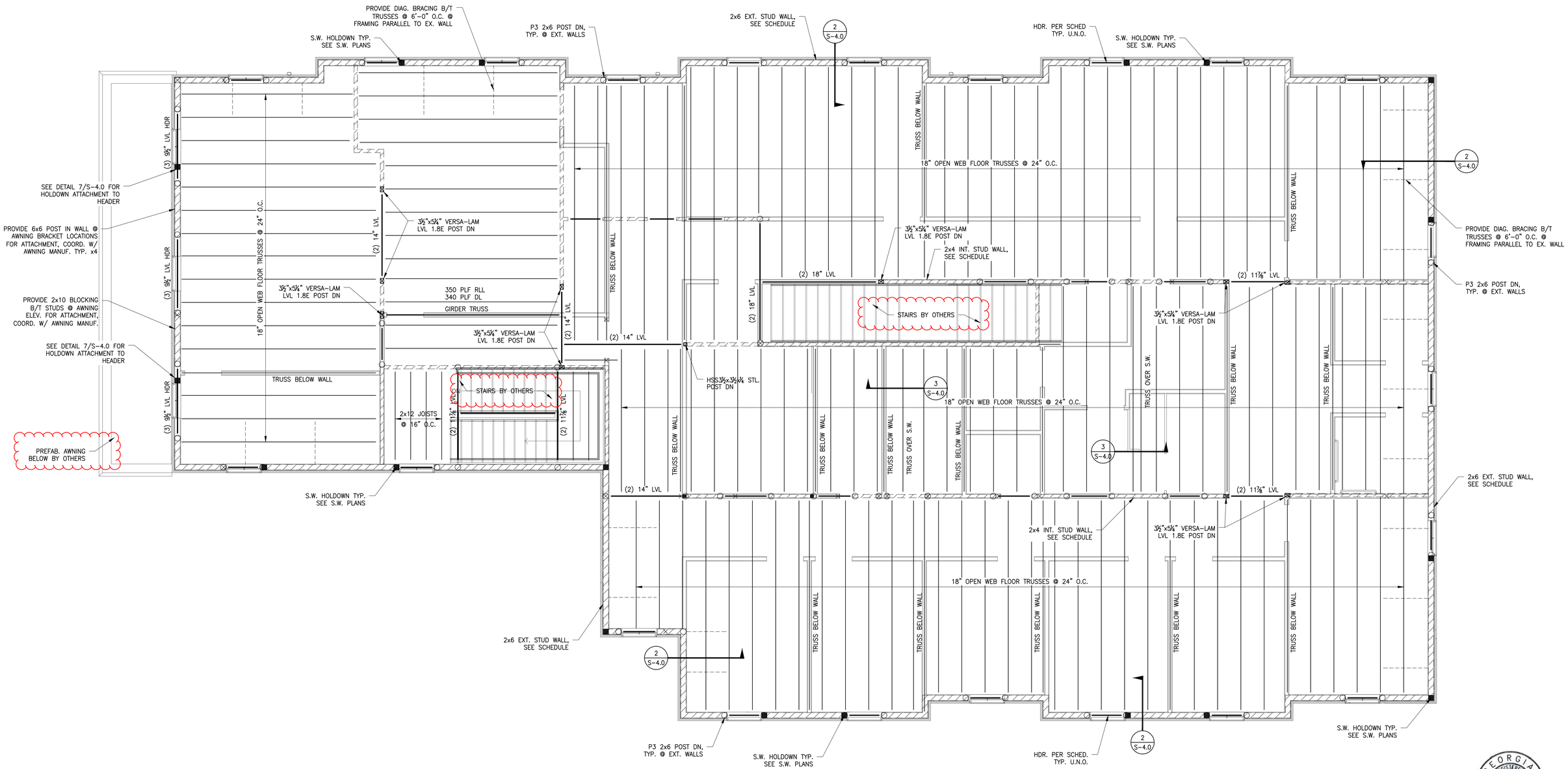

SECOND FLOOR PLAN

SCALE: ¼"=1'–0"

NOTES:

1. SEE S–0.0 FOR GENERAL NOTES.
2. ARCH. BACKGROUNDS SHOWN FOR GENERAL INFORMATION ONLY. SEE ARCH. FOR EXACT WALL LOCATIONS, DIMENSIONING AND OTHER
3. INFORMATION NOT SHOWN.TRUSS MANUF. TO COORD. WITH MEP DRAWINGS FROM RTU LOCATIONS AND WEIGHTS AS WELL AS CLEARANCES FOR DUCT RUNS.
4. TRUSS LOCATIONS ARE APPROXIMATE. TRUSS DESIGNER TO ADJUST SPACING AND LOCATIONS AS NEEDED

GEORGIA REGISTERED No. PE044647 PROFESSIONAL ENGINEER JAMES T. BREEDEN 08-02-23

ISSUED FOR CONSTRUCTION

Wednesday, August 2, 2023 BY TRAVEON HARRIS

REV	DESCRIPTION	DRWN	APPR	DATE

HAMILTON DENTAL

SECOND FLOOR FRAMING PLAN

SCALE: NOTED
DATE: 08/02/2023
DRWN. BY: JH
CHKD BY: JTB

Se Stability Engineering
1376 Church St, Ste 200, Decatur, GA 30030 Ph/Fax: 404-377-9316

SHEET NUMBER: S–1.2
PROJECT NO. SE#23244
SHT 6 OF 12
REV 0

LEGEND	
╳	POST UP, P3 TYP. U.N.O.
○	POST DOWN, P3 TYP. U.N.O.
⊗	POST THRU, P3 TYP. U.N.O.
P3	(3) GANGED STUDS
P4	(4) GANGED STUDS
P5	(5) GANGED STUDS
▨	LOAD BEARING WALL

ROOF FRAMING PLAN

SCALE: ¼"=1'-0"

NOTES:

1. SEE S-0.0 FOR GENERAL NOTES.
2. ARCH. BACKGROUNDS SHOWN FOR GENERAL INFORMATION ONLY. SEE ARCH. FOR EXACT WALL LOCATIONS, DIMENSIONING AND OTHER INFORMATION NOT SHOWN.
3. TRUSS MANUF. TO COORD. WITH MEP DRAWINGS FROM RTU LOCATIONS AND WEIGHTS AS WELL AS CLEARANCES FOR DUCT RUNS.

GEORGIA REGISTERED No. PE044647 PROFESSIONAL ENGINEER JAMES T. BREEDEN 08-02-23

ISSUED FOR CONSTRUCTION

REV	DESCRIPTION	DRWN	APPR	DATE

HAMILTON DENTAL

ROOF FRAMING PLAN

SCALE: NOTED
DATE: 08/02/2023
DRWN BY: JH
CHKD BY: JTB

Se Stability Engineering
1376 Church St, Ste 200, Decatur, GA 30030 Ph/Fax: 404-377-9316

SHEET NUMBER: S-1.3
PROJECT NO. SE#23244
SHT 7 OF 12
REV 0

23244-HAMILTON DENTAL.DWG

Wednesday, August 2, 2023 BY TRAVEON HARRIS

LEGEND	
╳	POST UP, P3 TYP. U.N.O.
○	POST DOWN, P3 TYP. U.N.O.
⊗	POST THRU, P3 TYP. U.N.O.
P3	(3) GANGED STUDS
P4	(4) GANGED STUDS
P5	(5) GANGED STUDS
▨	LOAD BEARING WALL
■	HOLDOWN, PER PLAN

23244-HAMILTON DENTAL.DWG

SHEARWALL HOLDOWN SCHEDULE

HOLDOWN TYPE	ANCHOR SIZE[6] & EMBEDMENT @ CONC. WALL, SEE WALL DETAILS 7/S-3.0 & 3/S-3.1	ANCHOR SIZE[6] & EMBEDMENT @ TURNDOWN & INT.	STRAP SUBSTITUTE	END LENGTH & FASTENERS
HDU4	SIMPSON SB5/8X24 A.B., 8" EMBEDMENT	5/8"ø A.B. 8" EMBEDMENT	SIMPSON CMST14	18" W/ (38) 10d NAILS
HDU8	SIMPSON SB7/8X24 A.B., 8" EMBEDMENT	7/8"ø A.B. 8" EMBEDMENT	SIMPSON CMST14	30" W/ (66) 10d NAILS
HDU11	SIMPSON PAB8 A.B., 8" EMBEDMENT	1"ø A.B. 8" EMBEDMENT	N/A	N/A

SHEATHING ATTACHMENT SCHEDULE

WALL TYPE	SHEATHING TYPE	FASTENER	ATTACHMENT	½"ø A.B.[3] SPACING @ S.W. SILL PLATE TO FOOTING	16d NAILS SPACING @ UPPER FLR SILL PLATES
INTERIOR NON-SHEAR WALL	½" GYPSUM	6d COOLER NAIL	8" O.C. @ EDGE 12" O.C. @ FIELD	48" O.C. OR P.A.F @ 24" O.C.	12" O.C.
SHEAR WALL "SW6"[7] & TYP. EXTERIOR WALL	15/32" PLYWOOD[5] CONTINUOUS ONE SIDE	8d NAIL	6" O.C. @ EDGE 12" O.C. @ FIELD	24" O.C.	6" O.C.
SHEAR WALL "SW4"[7]	15/32" PLYWOOD[5] CONTINUOUS ONE SIDE	8d NAIL	4" O.C. @ EDGE 6" O.C. @ FIELD	24" O.C.	4" O.C.

NOTES:

1. FOR AIR GAP & FIREPROOFING, SEE ARCH.
2. 0.177"ø POWDER ACTUATED FASTENERS TO HAVE 1½" MIN. PENETRATION.
3. ½"ø ANCHORS TO HAVE 7" MIN. EMBEDMENT. CONTRACTOR OPTION: SUBSTITUTE ½"ø SIMPSON TITEN HD W/ 4" EMBEDMENT.
4. FOR ½" ø ANCHOR BOLTS, PROVIDE STEEL PLATE WASHERS AS FOLLOWS:
   2x4 WALL ..... SIMPSON BPS 1/2-3
   2x6 WALL ..... SIMPSON BPS 1/2-6
5. 15/32" PLYWOOD SHEATHING TO BE 5-PLY APA RATED 32/16, EXPOSURE 1. CONTRACTOR OPTION: 7/16" OSB, APA RATED 24/16 EXPOSURE 1. OSB, IF UTILIZED, IS TO BE PROTECTED FROM WEATHER AT ALL TIMES TO PREVENT SWELLING.
6. ALL SHEATHING PANELS ARE TO BE APPLIED WITH LONG DIMENSION PERPENDICULAR TO STUDS.
7. PROVIDE BLOCKING AT ALL ADJOINING PANEL EDGES FOR WOOD SHEATHED SHEAR WALLS.
8. ALL SHEARWALL HOLDOWNS ANCHORED TO CONCRETE FOUNDATION WALLS SHALL BE ANCHORED WITH SIMPSON 'SB' ANCHOR BOLTS CAST-IN-PLACE. INSTALL PER MANUF. SPECIFICATIONS AND PROVIDE COUPLER NUT WITH THREADED ROD EXTENSION TO HOLDOWN.

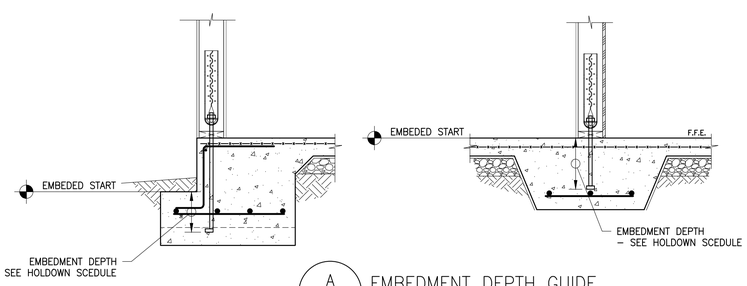

A
S-2.0
EMBEDMENT DEPTH GUIDE
SCALE: 3/4"=1'-0"

GEORGIA REGISTERED No. PE044647 PROFESSIONAL ENGINEER 08-02-23 JAMES T. BREEDEN

ISSUED FOR CONSTRUCTION

Wednesday, August 2, 2023 BY TRAVEON HARRIS

REV	DESCRIPTION	DRWN	APPR	DATE

HAMILTON DENTAL

FIRST FLOOR SHEARWALL PLAN

SCALE: NOTED
DATE: 08/02/2023
DRWN BY: JH
CHKD BY: JTB

Se Stability Engineering
1376 Church St, Ste 200, Decatur, GA 30030 Ph/Fax: 404-377-9316

SHEET NUMBER: S-2.0
PROJECT NO. SE#23244
SHT 8 OF 12
REV 0

LEGEND	
╳	POST UP, P3 TYP. U.N.O.
○	POST DOWN, P3 TYP. U.N.O.
⊗	POST THRU, P3 TYP. U.N.O.
P3	(3) GANGED STUDS
P4	(4) GANGED STUDS
P5	(5) GANGED STUDS
▨	LOAD BEARING WALL
■	HOLDOWN, PER PLAN

23244-HAMILTON DENTAL.DWG

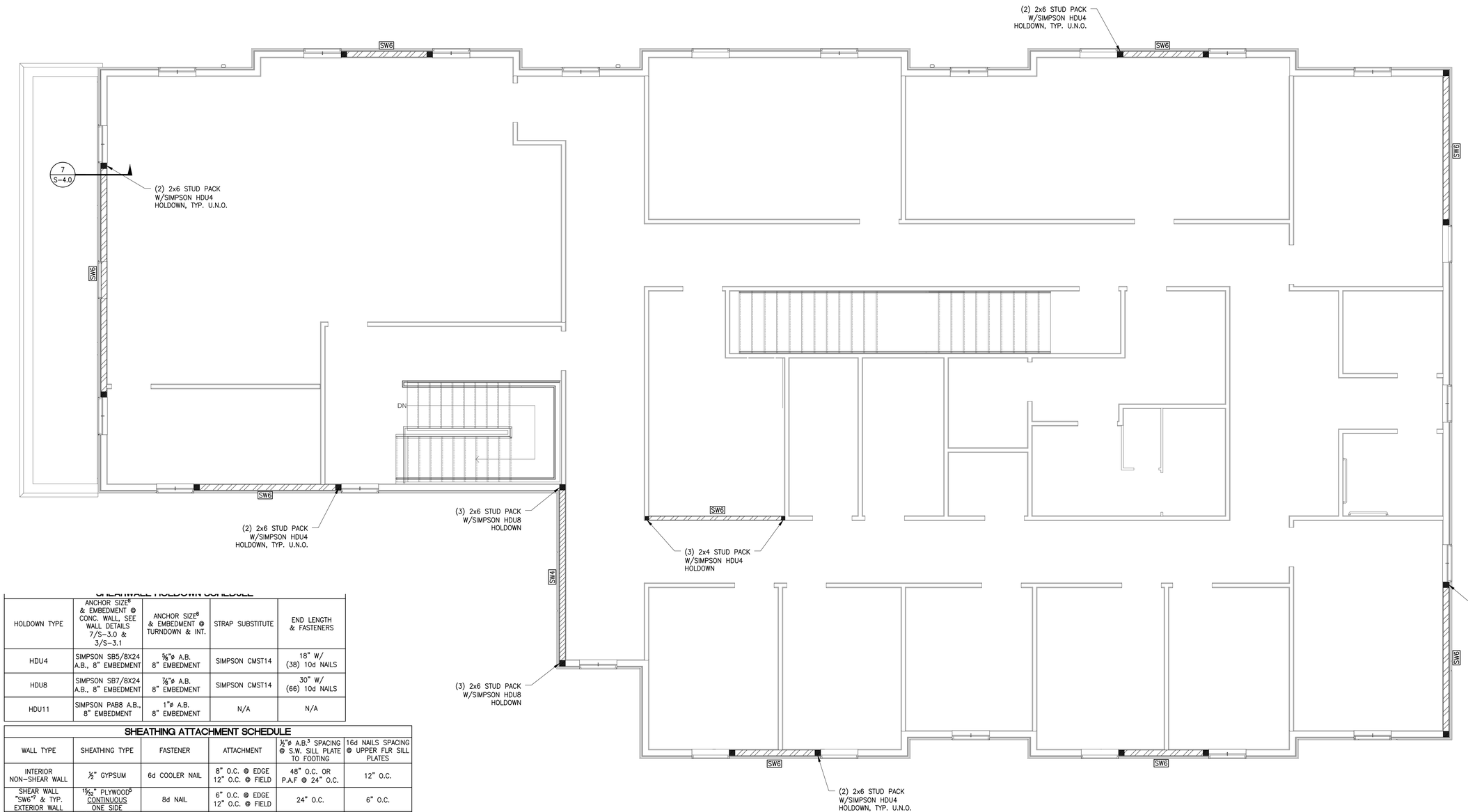

SHEARWALL HOLDOWN SCHEDULE

HOLDOWN TYPE	ANCHOR SIZE[8] & EMBEDMENT @ CONC. WALL, SEE WALL DETAILS 7/S-3.0 & 3/S-3.1	ANCHOR SIZE[8] & EMBEDMENT @ TURNDOWN & INT.	STRAP SUBSTITUTE	END LENGTH & FASTENERS
HDU4	SIMPSON SB5/8X24 A.B., 8" EMBEDMENT	⅝"ø A.B. 8" EMBEDMENT	SIMPSON CMST14	18" W/ (38) 10d NAILS
HDU8	SIMPSON SB7/8X24 A.B., 8" EMBEDMENT	⅞"ø A.B. 8" EMBEDMENT	SIMPSON CMST14	30" W/ (66) 10d NAILS
HDU11	SIMPSON PAB8 A.B., 8" EMBEDMENT	1"ø A.B. 8" EMBEDMENT	N/A	N/A

SHEATHING ATTACHMENT SCHEDULE

WALL TYPE	SHEATHING TYPE	FASTENER	ATTACHMENT	½"ø A.B.[3] SPACING @ S.W. SILL PLATE TO FOOTING	16d NAILS SPACING @ UPPER FLR SILL PLATES
INTERIOR NON-SHEAR WALL	½" GYPSUM	6d COOLER NAIL	8" O.C. @ EDGE 12" O.C. @ FIELD	48" O.C. OR P.A.F @ 24" O.C.	12" O.C.
SHEAR WALL "SW6"[7] & TYP. EXTERIOR WALL	15/32" PLYWOOD[5] CONTINUOUS ONE SIDE	8d NAIL	6" O.C. @ EDGE 12" O.C. @ FIELD	24" O.C.	6" O.C.
SHEAR WALL "SW4"[7]	15/32" PLYWOOD[5] CONTINUOUS ONE SIDE	8d NAIL	4" O.C. @ EDGE 6" O.C. @ FIELD	24" O.C.	4" O.C.

NOTES:

1. FOR AIR GAP & FIREPROOFING, SEE ARCH.
2. 0.177"ø POWDER ACTUATED FASTENERS TO HAVE 1½" MIN. PENETRATION.
3. ½"ø ANCHORS TO HAVE 7" MIN. EMBEDMENT. CONTRACTOR OPTION: SUBSTITUTE ½"ø SIMPSON TITEN HD W/ 4" EMBEDMENT.
4. FOR ½" ø ANCHOR BOLTS, PROVIDE STEEL PLATE WASHERS AS FOLLOWS:
   2x4 WALL ..... SIMPSON BPS 1/2-3
   2x6 WALL ..... SIMPSON BPS 1/2-6
5. 15/32" PLYWOOD SHEATHING TO BE 5-PLY APA RATED 32/16, EXPOSURE 1. CONTRACTOR OPTION: 7/16" OSB, APA RATED 24/16 EXPOSURE 1. OSB, IF UTILIZED, IS TO BE PROTECTED FROM WEATHER AT ALL TIMES TO PREVENT SWELLING.
6. ALL SHEATHING PANELS ARE TO BE APPLIED WITH LONG DIMENSION PERPENDICULAR TO STUDS.
7. PROVIDE BLOCKING AT ALL ADJOINING PANEL EDGES FOR WOOD SHEATHED SHEAR WALLS.
8. ALL SHEARWALL HOLDOWNS ANCHORED TO CONCRETE FOUNDATION WALLS SHALL BE ANCHORED WITH SIMPSON 'SB' ANCHOR BOLTS CAST-IN-PLACE. INSTALL PER MANUF. SPECIFICATIONS AND PROVIDE COUPLER NUT WITH THREADED ROD EXTENSION TO HOLDOWN.

GEORGIA REGISTERED No. PE044647 PROFESSIONAL ENGINEER 08-02-23 JAMES T. BREEDEN

ISSUED FOR CONSTRUCTION

Wednesday, August 2, 2023 BY TRAVEON HARRIS

REV	DESCRIPTION	DRWN	APPR	DATE

HAMILTON DENTAL

SECOND FLOOR SHEARWALL PLAN

SCALE: NOTED
DATE: 08/02/2023
DRWN. BY: JH
CHKD BY: JTB

Se Stability Engineering
1376 Church St, Ste 200, Decatur, GA 30030 Ph/Fax: 404-377-9316

SHEET NUMBER: S-2.1
PROJECT NO. SE#23244
SHT 9 OF 12
REV 0

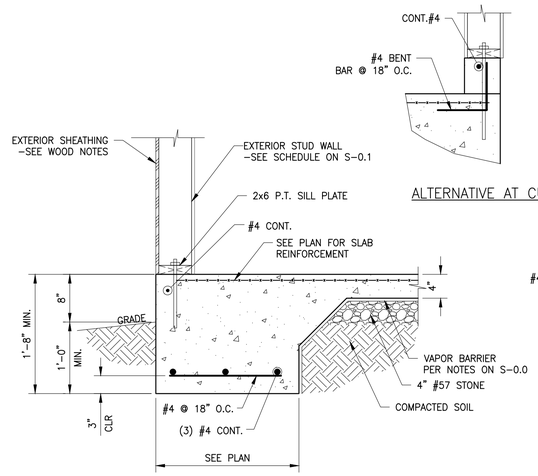

1 S–3.0 TYP. TURNDOWN FOOTING
SCALE: 1"=1'–0"

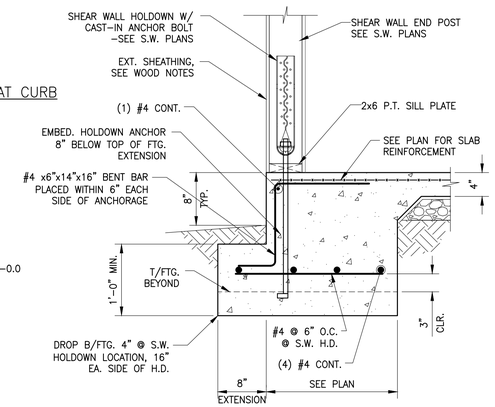

2 S–3.0 TYP. SHEAR WALL HOLDOWN
SCALE: 1"=1'–0"

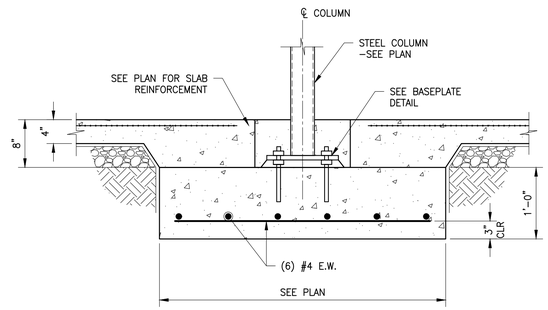

3 S–3.0 STEEL COLUMN FOOTING
SCALE: 1"=1'–0"

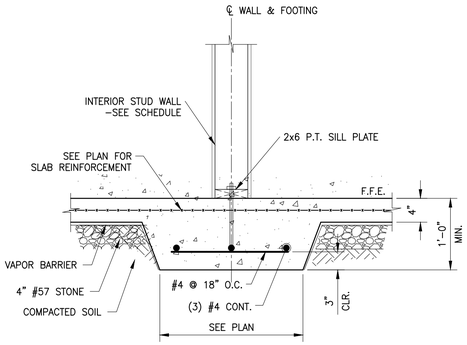

4 S–3.0 INTERIOR STUD WALL FOOTING
SCALE: 1"=1'–0"

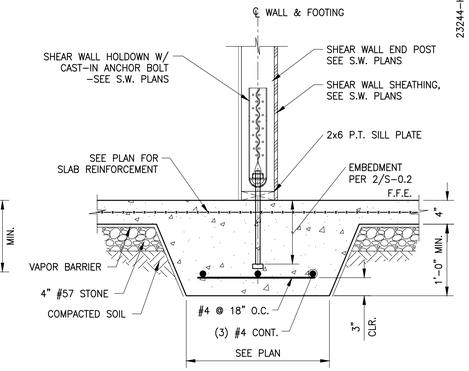

5 S–3.0 INTERIOR SHEAR WALL HOLDOWN
SCALE: 1"=1'–0"

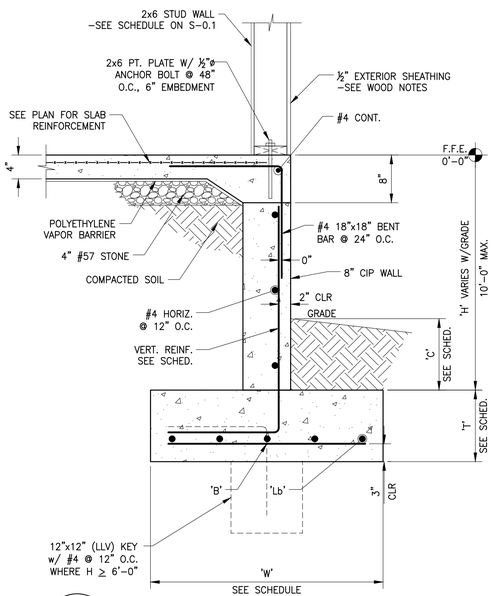

6 S–3.0 CONCRETE STEM WALL @ LOW GRADE
SCALE: 1"=1'–0"

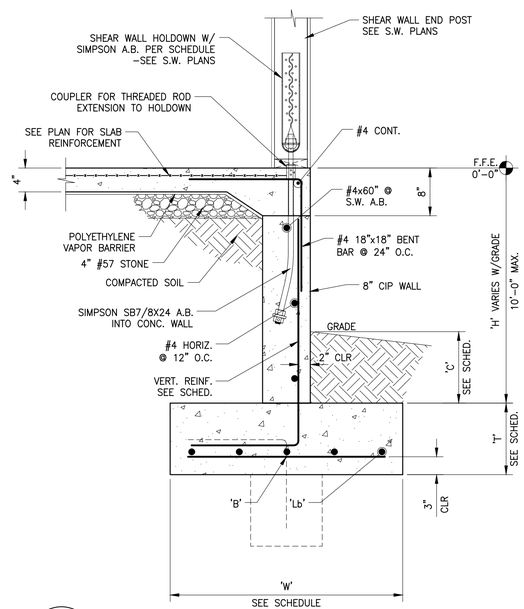

7 S–3.0 SHEAR WALL HOLDDOWN @ STEM WALL
SCALE: 1"=1'–0"

H	W	T	C	VERT.	Lb	B
ft	ft–in	in	in			
2–6	2–6	12	18	#4@12	(4) #4	#4@12
6–10	3–3	12	30	#4@10	(5) #4	#4@10

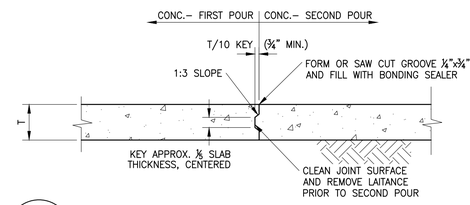

A S–3.0 CONSTRUCTION JOINT FOR SLAB ON GRADE
SCALE: N.T.S.

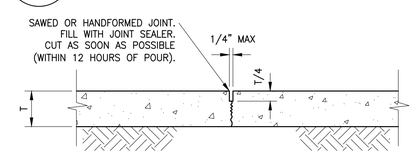

B S–3.0 CONTROL JOINT FOR SLAB ON GRADE
SCALE: N.T.S.

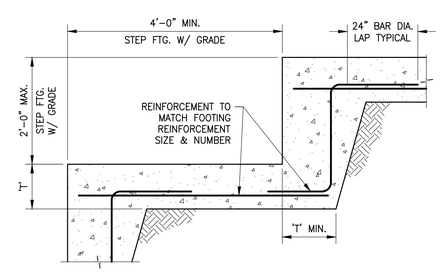

C S–3.0 STEPPED FOOTING DETAIL
SCALE: 3/4"=1'–0"

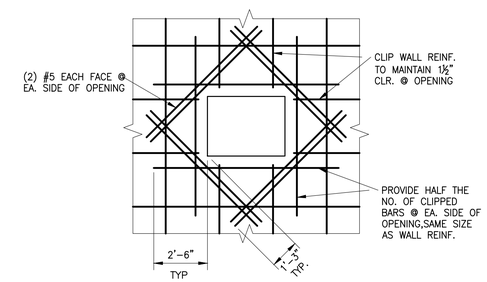

D S–3.0 TYP CONC WALL OPENING REINFORCEMENT
SCALE: 1"=1'–0"

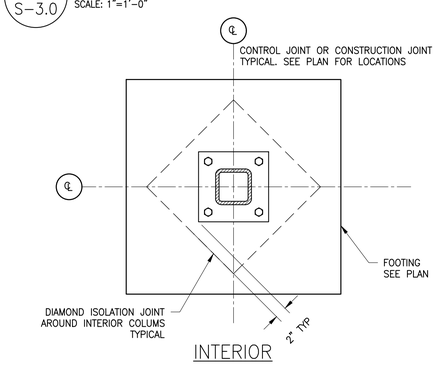

E S–3.0 COLUMN ISOLATION JOINT DETAIL
SCALE: 1"=1'–0"

GEORGIA REGISTERED No. PE044647 PROFESSIONAL ENGINEER JAMES T. BREEDEN 08-02-23

ISSUED FOR CONSTRUCTION

REV	DESCRIPTION	DRWN	APPR	DATE

HAMILTON DENTAL

FOUNDATION DETAILS

SCALE: NOTED
DATE: 08/02/2023
DRWN BY: JH
CHKD BY: JTB

Se Stability Engineering
1376 Church St, Ste 200, Decatur, GA 30030 Ph/Fax: 404-377-9316

SHEET NUMBER: S–3.0
PROJECT NO. SE#23244
SHT 10 OF 12
REV 0

23244–HAMILTON DENTAL.DWG

Wednesday, August 2, 2023 BY TRAVEON HARRIS

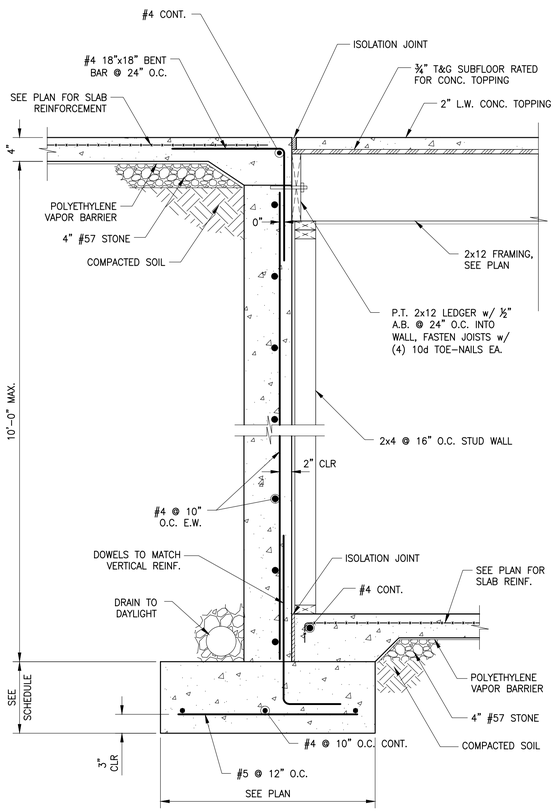

1 S-3.1 FULL-HEIGHT INT. BASEMENT WALL
SCALE: 1"=1'-0"

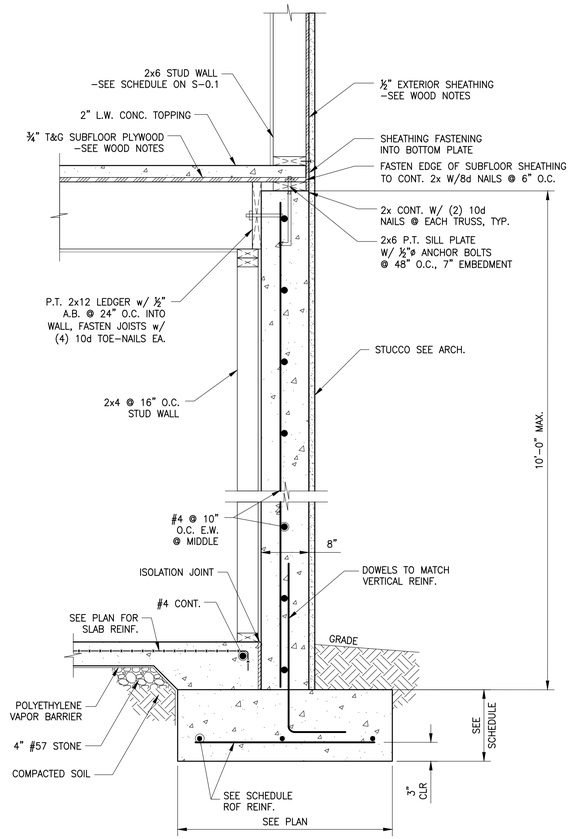

2 S-3.1 FULL-HEIGHT CONC. WALL SECTION
SCALE: 1"=1'-0"

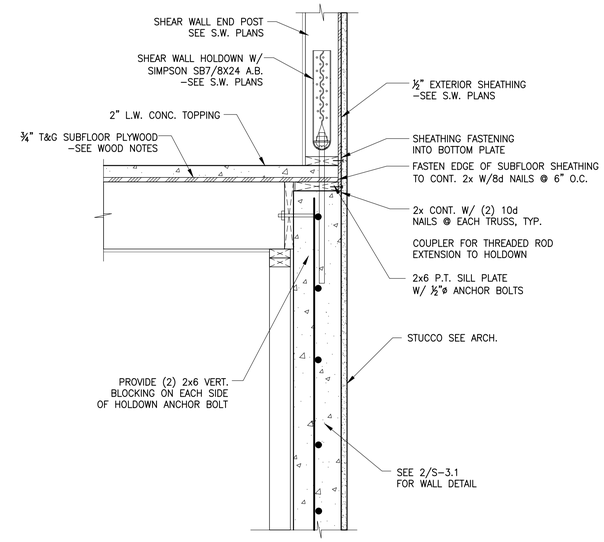

3 S-3.1 ALT. SECTION @ SHEAR WALL HOLDOWN
SCALE: 1"=1'-0"

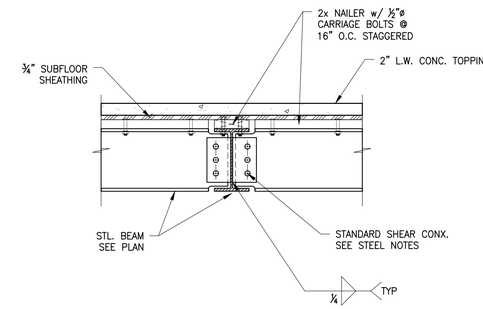

4 S-3.1 BEAM-BEAM CONNECTION DETAIL
SCALE: 1"=1'-0"

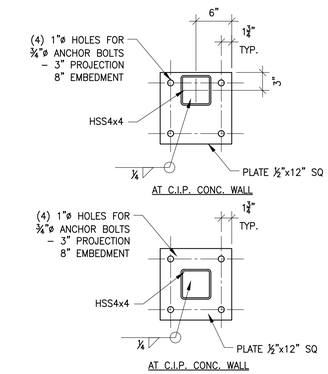

A S-3.1 HSS5x5 BASEPLATE DETAIL
SCALE: 1"=1'-0"

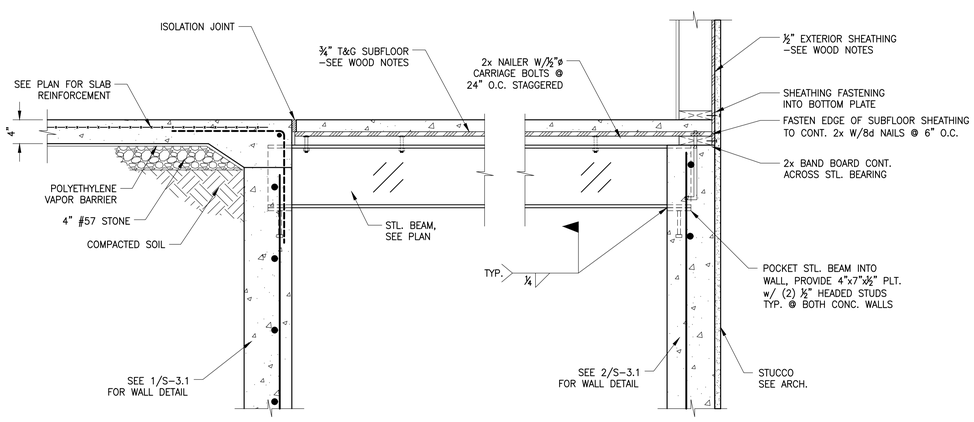

5 S-3.1 STEEL BEAM SECTION
SCALE: 1"=1'-0"

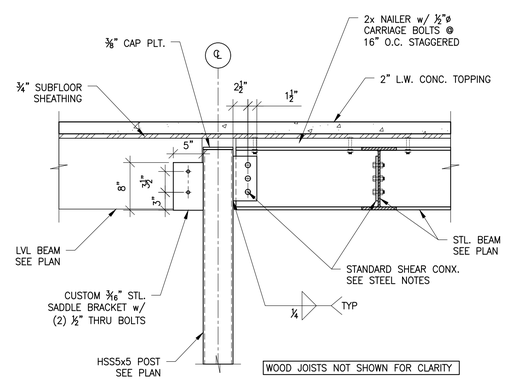

6 S-3.1 BEAM-COLUMN CONNECTION DETAIL
SCALE: 1"=1'-0"

23244-HAMILTON DENTAL.DWG

Wednesday, August 2, 2023 BY TRAVEON HARRIS

GEORGIA REGISTERED No. PE044647 PROFESSIONAL ENGINEER 08-02-23 JAMES T. BREEDEN

ISSUED FOR CONSTRUCTION

REV	DESCRIPTION	DRWN	APPR	DATE

HAMILTON DENTAL

FOUNDATION DETAILS

SCALE: NOTED
DATE: 08/02/2023
DRWN BY: JH
CHKD BY: JTB

Se Stability Engineering
1376 Church St, Ste 200, Decatur, GA 30030 Ph/Fax: 404-377-9316

SHEET NUMBER: S-3.1
PROJECT NO. SE#23244
SHT 11 OF 12
REV 0

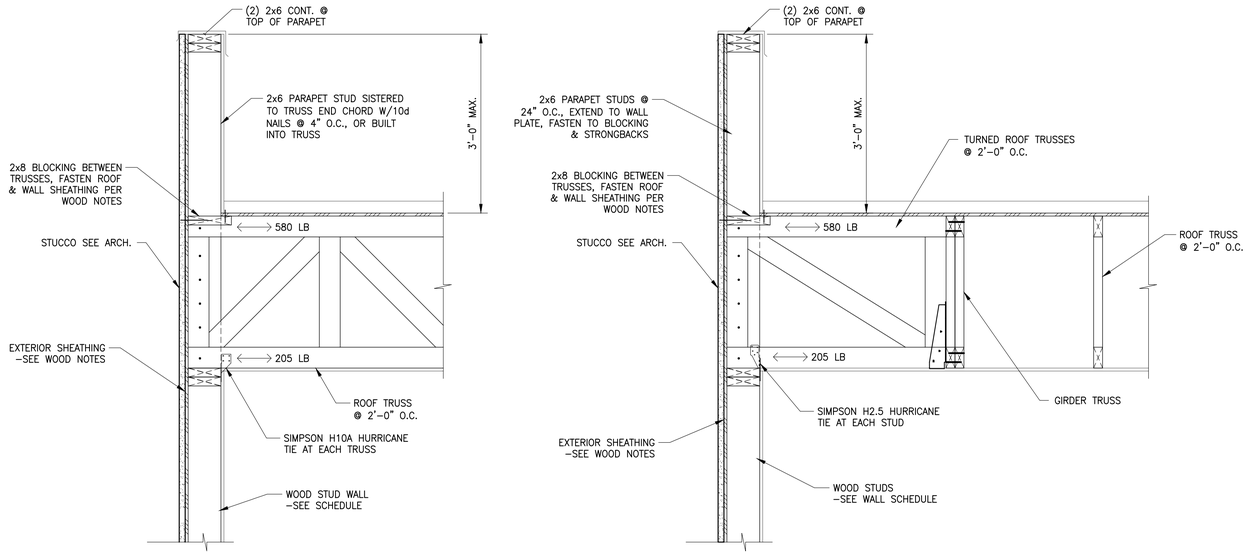

1 S-4.0 ROOF PARAPET DETAILS
SCALE: 1"=1'-0"

NOTES:
1. WIND FORCES SHOWN ARE UNFACTORED, APPLIED TO EACH ROOF TRUSS (DIRECTIONS ARE REVERSIBLE)
2. COORDINATE W/ARCH. FOR PARAPET CONSTRUCTION.

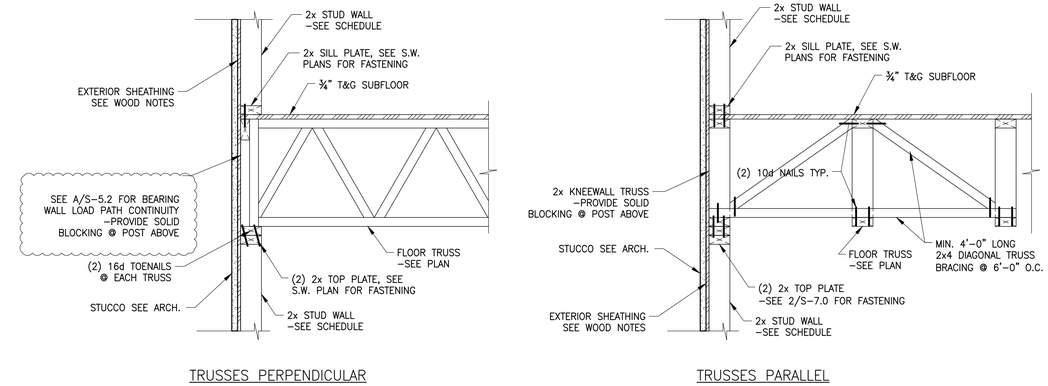

2 S-4.0 TYP EXTERIOR WALL
SCALE: 1"=1'-0"

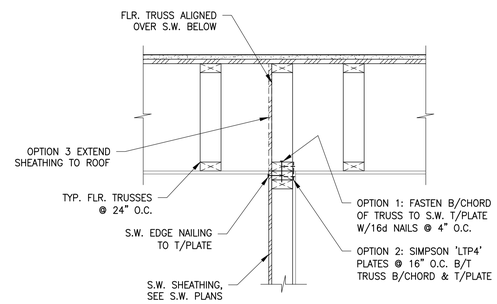

3 S-4.0 DRAG TRUSS OVER S.W.
SCALE: 1"=1'-0"

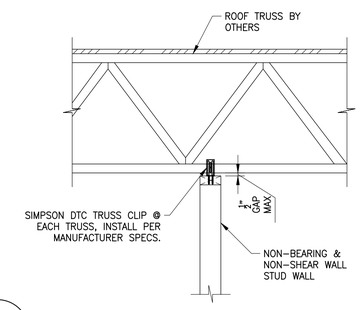

4 S-4.0 NON-BEARING & NON-SW STUD WALL TOP CONX.
SCALE: 1"=1'-0"

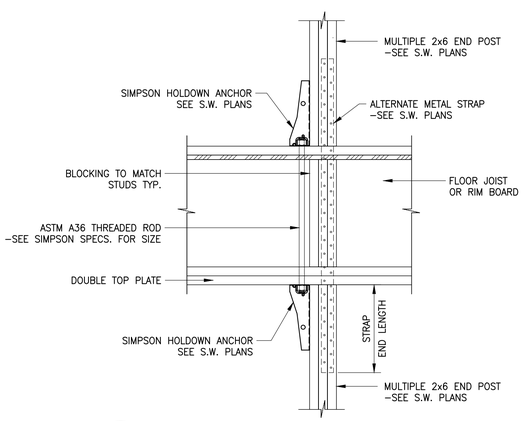

6 S-4.0 SHEAR WALL TRANSITION BETWEEN FLOORS
SCALE: 1"=1'-0"
ALTERNATE TO HOLD DOWN: PROVIDE STRAPPING BETWEEN WOOD FLOORS PER THE END CHORD CONNECTION SCHEDULE. BOTH HOLDOWN OPTIONS SHOWN ONLY ONE REQ'D IN FIELD

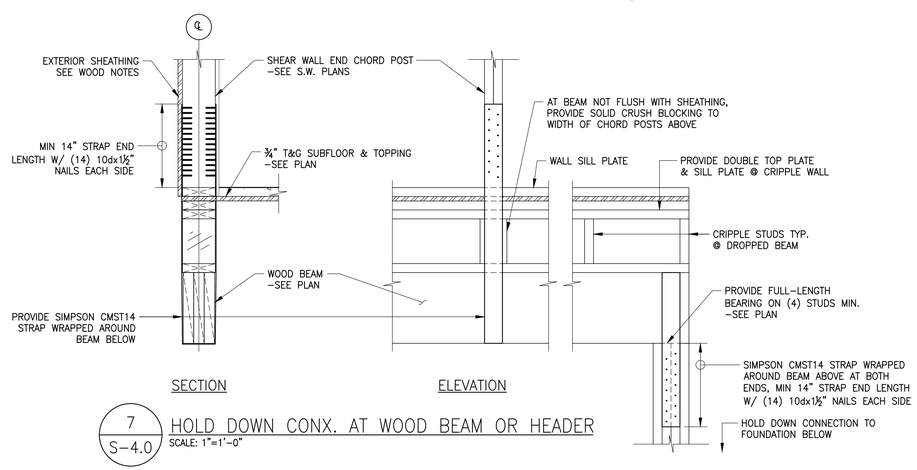

7 S-4.0 HOLD DOWN CONX. AT WOOD BEAM OR HEADER
SCALE: 1"=1'-0"

GEORGIA REGISTERED No. PE048647 PROFESSIONAL ENGINEER 08-02-23 JAMES T. BREEDEN

ISSUED FOR CONSTRUCTION

REV	DESCRIPTION	DRWN	APPR	DATE

HAMILTON DENTAL

FRAMING DETAILS

SCALE: NOTED
DATE: 08/02/2023
DRWN BY: JH
CHKD BY: JTB
SHEET NUMBER: S-4.0

Se Stability Engineering
1376 Church St, Ste 200, Decatur, GA 30030 PH/Fax: 404-377-9316

PROJECT NO: SE#23244
SHT 12 OF 12
REV 0

23244-HAMILTON DENTAL.DWG

Wednesday, August 2, 2023 BY TRAVEON HARRIS

SPECIFICATIONS

APPLICABLE CODES:

INTERNATIONAL FIRE CODE (IFC), 2018 EDITION
2020 IFC GA AMENDMENTS
INTERNATIONAL PLUMBING CODE (IPC), 2018 EDITION
2022 IPC GA AMENDMENTS
INTERNATIONAL MECHANICAL CODE (IMC), 2018 EDITION
2020 IMC GA AMENDMENTS
INTERNATIONAL FUEL GAS CODE (IFGC), 2018 EDITION
2022 IFGC GA AMENDMENTS
INTERNATIONAL ENERGY CONSERVATION CODE (IECC), 2015 EDITION
2022 SUPPLEMENTS AND AMENDMENTS

SHOP DRAWINGS:

SUBMIT SHOP DRAWINGS FOR REVIEW. PDF FILES PREFERRED. SHOP DRAWINGS SHALL BE BOUND INTO VOLUMES (FILES), WITH EACH VOLUME (FILE) CONTAINING ONE COPY OF ALL SHOP DRAWINGS. ALL SHOP DRAWINGS SHALL BE SUBMITTED SIMULTANEOUSLY; NO SHOP DRAWINGS WILL BE CHECKED UNTIL ALL HAVE BEEN SUBMITTED.

SUBMITTALS SHALL BE SUPPORTED BY DESCRIPTIVE MATERIAL, SUCH AS CATALOG CUTS, DIAGRAMS, PERFORMANCE CURVES AND CHARTS PUBLISHED BY THE MANUFACTURER, TO SHOW CONFORMANCE TO SPECIFICATION AND DRAWING REQUIREMENTS; MODEL NUMBERS ALONE WILL NOT BE ACCEPTABLE. ALL LITERATURE SHALL CLEARLY INDICATE THE SPECIFIED MODEL NUMBER, DIMENSIONS, ARRANGEMENT, RATING AND CHARACTERISTICS OF THE PROPOSED EQUIPMENT. CAPACITIES AND RATINGS SHALL BE BASED ON CONDITIONS INDICATED OR SPECIFIED HEREIN. ANY DEVIATIONS FROM SPECIFIED EQUIPMENT (PARTICULARLY THOSE WHICH REQUIRE COORDINATION WITH OTHER TRADES) SHALL BE CLEARLY NOTED IN A CONCISE LIST ON A SEPARATE SHEET.

TEST AND BALANCE:

TEST AND BALANCE (TAB) CONTRACTOR SHALL HOLD A CURRENT NATIONAL BALANCING COUNCIL (NBC) CERTIFICATION AND POSSESS ACCURATE AND CALIBRATED INSTRUMENTS. TAB WORK AND REPORTS SHALL BE PER NBC PRACTICAL STANDARDS, PROCEDURES AND FORMS. ACCEPTIBLE ALTERNATIVE TAB FIRM CERTIFICATIONS/PROCEDURES: NEBB, AABC, OR TABB.

PRIOR TO COMMENCEMENT OF THE TAB WORK, THE MECHANICAL SYSTEMS ARE TO BE STARTED AND FULLY FUNCTIONING. A CHECKLIST PRIOR TAB WORK IS TO BE SENT TO THE INSTALLING CONTRACTOR AND RETURNED ATTESTING TO THE READINESS OF THE SYSTEMS FOR BALANCING.

PREFERRED TAB FIRM: P-TAB.COM

GUARANTEE:

GUARANTEE THAT EACH PIECE OF APPARATUS SHALL BE OF THE CUSTOMARY STANDARD AND QUALITY FURNISHED BY THE DESIGNED MANUFACTURER FOR THAT CATALOG NUMBER.

GUARANTEE THAT THE AIR SYSTEMS SHALL OPERATE WITHOUT AERODYNAMIC NOISE GENERATED FROM THE FAULTY INSTALLATION OF DUCT WORK OR ANY COMPONENT OF THE AIR DISTRIBUTION SYSTEM.

GUARANTEE THAT ALL SYSTEMS AND COMPONENTS SHALL BE PROVIDED WITH A ONE YEAR WARRANTY FROM THE TIME OF DATE OF SUBSTANTIAL COMPLETION. THE WARRANTY SHALL COVER ALL MATERIALS AND WORKMANSHIP. DURING THIS WARRANTY PERIOD, ALL DEFECTS IN MATERIALS AND WORKMANSHIP SHALL BE CORRECTED BY REPAIR OR REPLACEMENT WITHOUT INCURRING ADDITIONS TO THE CONTRACT.

GENERAL NOTES:

REFER TO ARCHITECTURAL REFLECTED CEILING PLANS FOR EXACT LOCATION OF ALL CEILING MOUNTED EQUIPMENT.

ALL DUCT DIMENSIONS INDICATED IN THESE DOCUMENTS ARE INSIDE-CLEAR DIMENSIONS.

PORTIONS OF DUCTWORK OR PIPING VISIBLE THROUGH GRILLES AND REGISTERS IN FINISHED AREAS SHALL BE PAINTED FLAT BLACK. PAINT BLACK BEHIND ALL GRILLES.

ALL WIRING IN THE CEILING PLENUM SHALL BE PLENUM RATED CABLE.

MOUNTING FRAME OF CEILING MOUNTED AIR DISTRIBUTION DEVICES SHALL BE COMPATIBLE WITH CEILING TYPE. REFER TO ARCHITECTURAL DRAWINGS FOR CEILING TYPE.

ALL FIRE SEPARATIONS MUST BE PROTECTED WHEN APPLICABLE.

PROVIDE NEW FILTERS (MERV 7 OR BETTER PER OWNER) FOR ALL APPLICABLE HVAC EQUIPMENT AT THE END OF CONSTRUCTION.

ALL MATERIAL IN PLENUM MUST MEET FIRE AND SMOKE SPREAD AS REQUIRED BY NFPA 90A.

ALL ROOF PENETRATIONS TO BE 12" APART AND AT LEAST 12" AWAY FROM CURBS, WALLS, AND DRAIN SUMPS TO PROVIDE ROOFING CONTRACTOR WITH SUFFICIENT ACCESS FOR FLASHING EACH ROOF PENETRATION.

SUBSTITUTIONS MUST BE APPROVED IN WRITING BY ARCHITECT PRIOR TO BID SUBMISSION.

CONTRACTOR SHALL REVIEW ALL CONTRACT DOCUMENTS AND SHALL BE FAMILIAR WITH THE SCOPE AND REQUIREMENTS OF THIS PROJECT. ANY DISCREPANCIES OR LACK OF CLARITY IN THE DOCUMENTS SHALL BE IDENTIFIED TO THE ARCHITECT OR ENGINEER PRIOR TO THE SUBMISSION OF PRICING BIDS. WITH A SUBMITTED BID, CONTRACTOR IS ACCEPTING THESE DOCUMENTS AS SUFFICIENT DEFINITION OF THE SCOPE OF WORK, AND ANY ADDITIONAL COSTS BASED ON UNCLARITY OF CONTRACT DOCUMENTS WILL NOT BE CONSIDERED.

THE CONTRACTOR SHALL REFERENCE THE FULL SET OF CONSTRUCTION DOCUMENTS DURING PRICING AND CONSTRUCTION FOR COORDINATION BETWEEN DISCIPLINES RELATIVE TO THE MECHANICAL SCOPE.

CEILING FAN:

CEILING MOUNTED EXHAUST FANS SHALL BE OF THE CENTRIFUGAL DIRECT DRIVE TYPE. THE FAN HOUSING SHALL BE CONSTRUCTED OF STEEL. THE PLASTIC DUCT COLLAR SHALL BE A TAPERED SLEEVE FOR EASE OF CONNECTION TO 3 IN AND 4 IN ROUND DUCTWORK AND SHALL INCLUDE A BACKDRAFT DAMPER. THE GRILLE SHALL BE CONSTRUCTED OF NON-YELLOWING HIGH STRENGTH POLYMER AND ATTACHED TO THE HOUSING WITH TORSION SPRINGS. THE WHEELS SHALL BE CONSTRUCTED OF HIGH STRENGTH POLYMER. THE ACCESS FOR WIRING SHALL BE EXTERNAL. THE MOTOR DISCONNECT SHALL BE INTERNAL AND OF THE PLUG IN TYPE.

ALL FANS SHALL BEAR THE AMCA CERTIFIED RATINGS SEALS FOR SOUND AND AIR PERFORMANCE AND SHALL BE U.L. LISTED.

GRAVITY HOOD:

THE HOOD SHALL BE CONSTRUCTED OF ALUMINUM. THE INTERNAL STRUCTURE SHALL BE GALVANIZED STEEL.

THE CURB CAP SHALL BE NON-HINGED. THE HOUSING SHALL BE CONSTRUCTED OF ALUMINUM AND IN THE WINDBAND AND CURB CAP. THE WINDBAND SHALL BE ONE PIECE SPUN ALUMINUM CONSTRUCTION AND SHALL MAINTAIN THE ORIGINAL MATERIAL THICKNESS THROUGHOUT THE HOUSING. THE WINDBAND SHALL INCLUDE AN INTEGRAL ROLLED BEAD. THE CURB CAP SHALL INCLUDE PREPUNCHED MOUNTING HOLES TO ENSURE CORRECT ATTACHMENT TO THE ROOF.

REFER TO THE EQUIPMENT SCHEDULE FOR A FULL LISTING OF REQUIRED HOOD ACCESSORIES.

SPECIFICATIONS

DIFFUSERS, GRILLES, & REGISTERS:

EGGCRATE GRILLE:

RETURN GRILLES SHALL BE TITUS MODEL 50F FOR THE SIZES AND MOUNTING TYPES AS SHOWN ON THE PLANS AND OUTLET SCHEDULE. RETURN GRILLES MUST PROVIDE A FREE AREA OF AT LEAST 90%. OUTER BORDERS SHALL BE CONSTRUCTED OF HEAVY EXTRUDED ALUMINUM WITH A THICKNESS OF 0.040-0.050 INCH AND SHALL HAVE COUNTERSUNK SCREW HOLES FOR A NEAT APPEARANCE. BORDER WIDTH SHALL BE 1¼ INCHES ON ALL SIDES AND SHALL BE INTERLOCKED AT THE FOUR CORNERS AND MECHANICALLY STAKED TO FORM A RIGID FRAME. CHOICE OF THREE SIZES OF ALUMINUM GRID: ½ X ½ X ½ INCH, ½ X ½ X 1 INCH, OR 1 X 1 X 1 INCH SHALL BE AVAILABLE.

OPTIONAL OPPOSED-BLADE VOLUME DAMPER SHALL BE CONSTRUCTED OF HEAVY GAUGE STEEL OR ALUMINUM. DAMPER MUST BE OPERABLE FROM THE FACE OF THE GRILLE.

DOUBLE DEFLECTION REGISTERS:

ALUMINUM SUPPLY GRILLES SHALL BE OF THE SIZES AND MOUNTING TYPES SHOWN ON THE PLANS AND OUTLET SCHEDULE. THE DEFLECTION BLADES SHALL BE AVAILABLE PARALLEL TO THE LONG OR SHORT DIMENSION OF THE GRILLE OR REGISTER. CONSTRUCTION SHALL BE OF ALUMINUM WITH A 1¼-INCH WIDE BORDER ON ALL SIDES. SIZES 24 X 24 INCHES AND BELOW SHALL HAVE ROLL-FORMED BORDERS WITH A MINIMUM THICKNESS OF 0.032 INCH. LARGER SIZES SHALL BE CONSTRUCTED USING CONTINUOUS ALUMINUM EXTRUSIONS WITH A NOMINAL THICKNESS OF 0.040 THROUGH 0.050 INCH AND SHALL BE INTERLOCKED AT THE FOUR CORNERS AND MECHANICALLY STAKED TO FORM A RIGID FRAME. SCREW HOLES SHALL BE COUNTERSUNK FOR A NEAT APPEARANCE.

DEFLECTION BLADES SHALL BE CONTOURED TO A SPECIFICALLY DESIGNED AND TESTED CROSS-SECTION TO MEET PUBLISHED TEST PERFORMANCE DATA. BLADES SHALL BE SPACED ON ¾-INCH CENTERS. BLADES SHALL HAVE FRICTION PIVOTS ON BOTH SIDES TO ALLOW INDIVIDUAL BLADE ADJUSTMENT WITHOUT LOOSENING OR RATTLING OR BE INSERTED THROUGH THE FRAME AND HELD TIGHT WITH STEEL FRICTION WIRE INTERLOCKED TO THE FRAME ON BOTH ENDS OF EACH SIDE. PLASTIC BLADE PIVOTS ARE NOT ACCEPTABLE.

OPTIONAL OPPOSED BLADE VOLUME DAMPER SHALL BE CONSTRUCTED OF HEAVY GAUGE STEEL OR ALUMINUM. DAMPER MUST BE OPERABLE FROM THE FACE OF THE GRILLE.

THE GRILLE FINISH SHALL BE #26 WHITE. THE FINISH SHALL BE AN ANODIC ACRYLIC PAINT, BAKED AT 315° F FOR 30 MINUTES. THE PENCIL HARDNESS MUST BE HB TO H. THE PAINT MUST PASS A 100-HOUR ASTM B117 CORROSIVE ENVIRONMENTS SALT SPRAY TEST WITHOUT CREEPAGE, BLISTERING OR DETERIORATION OF FILM. THE PAINT MUST PASS A 250-HOUR ASTM D870 WATER IMMERSION TEST. THE PAINT MUST ALSO PASS THE ASTM D2794 REVERSE IMPACT CRACKING TEST WITH A 50-INCH POUND FORCE APPLIED.

THE MANUFACTURER SHALL PROVIDE PUBLISHED PERFORMANCE DATA FOR THE GRILLE. THE GRILLE SHALL BE TESTED IN ACCORDANCE WITH ANSI/ASHRAE STANDARD 70-2006.

PLAQUE DIFFUSERS:

ARCHITECTURAL SQUARE PANEL CEILING DIFFUSERS SHALL BE OF THE SIZES AND MOUNTING TYPES SHOWN ON THE PLANS AND OUTLET SCHEDULE. THE FACE PANEL IS REMOVABLE BY MEANS OF FOUR HANGER BRACKETS. THE EXPOSED SURFACE OF THE FACE PANEL SHALL BE SMOOTH, FLAT, AND FREE OF VISIBLE FASTENERS.
THE BACK OF THE FACE PANEL SHALL HAVE AN AERODYNAMICALLY SHAPED, ROLLED EDGE TO ENSURE A TIGHT HORIZONTAL DISCHARGE PATTERN. CEILING DIFFUSERS WITH A 24 X 24-INCH FULL FACE SHALL HAVE NO LESS THAN AN 18 X 18-INCH FACE PANEL SIZE. CEILING DIFFUSERS WITH A 12 X 12-INCH FULL FACE SHALL HAVE NO LESS THAN A 9 X 9-INCH FACE PANEL SIZE.

THE BACKPAN SHALL BE ONE PIECE PRECISION DIE-STAMPED AND SHALL INCLUDE AN INTEGRALLY DRAWN INLET. THE DIFFUSER NECK SHALL HAVE A MINIMUM OF 1¼-INCH DEPTH AVAILABLE FOR DUCT CONNECTION.

THE FINISH SHALL BE #26 WHITE. THE FINISH SHALL BE AN ANODIC ACRYLIC PAINT, BAKED AT 315°F FOR 30 MINUTES. THE PENCIL HARDNESS MUST BE HB TO H.

THE PAINT MUST PASS A 100-HOUR ASTM B117 CORROSIVE ENVIRONMENTS SALT SPRAY TEST WITHOUT CREEPAGE, BLISTERING OR DETERIORATION OF FILM. THE PAINT MUST PASS A 250-HOUR ASTM D870 WATER IMMERSION TEST. THE PAINT MUST ALSO PASS THE ASTM D2794 REVERSE IMPACT CRACKING TEST WITH A 50-INCH POUND FORCE APPLIED.

OPTIONAL ROUND DAMPER SHALL BE CONSTRUCTED OF HEAVY GAUGE STEEL. DAMPER MUST BE OPERABLE FROM THE FACE OF THE DIFFUSER. OPTIONAL DIRECTIONAL BLOW CLIPS SHALL BE AVAILABLE TO RESTRICT THE DISCHARGE AIR IN CERTAIN DIRECTIONS.

OPTIONAL MOLDED INSULATION BLANKET SHALL BE AVAILABLE. THE INSULATION WILL BE R-6, FOIL-BACKED, AND PROVIDE AN ADDITIONAL 1-INCH GAP AROUND THE NECK TO INSTALL INSULATED FLEX DUCT.

THE MANUFACTURER SHALL PROVIDE PUBLISHED PERFORMANCE DATA FOR THE SQUARE PANEL DIFFUSER. THE DIFFUSER SHALL BE TESTED IN ACCORDANCE WITH ANSI/ASHRAE STANDARD 70-1991.

DUCTWORK AND ACCESSORIES:

INDUSTRY STANDARDS: COMPLY WITH SMACNA (SHEET METAL AND AIR CONDITIONING CONTRACTORS' NATIONAL ASSOCIATION) HVAC DUCT CONSTRUCTION STANDARDS, RECOMMENDATIONS FOR FABRICATION, GAUGES, CONSTRUCTION AND DETAILS, AND INSTALLATION PROCEDURES, EXCEPT AS OTHERWISE INDICATED.

COMPLY WITH ASHRAE (AMERICAN SOCIETY OF HEATING, REFRIGERATING AND AIR CONDITIONING ENGINEERS) FUNDAMENTALS HANDBOOK RECOMMENDATIONS, EXCEPT AS OTHERWISE INDICATED.

DUCTWORK METAL AND GAUGES: EXCEPT AS OTHERWISE INDICATED, FABRICATE DUCTWORK FROM GALVANIZED SHEET STEEL COMPLYING WITH ASTM A527, LOCKFORMING QUALITY, WITH ASTM A525 G90 ZINC COATING, MILL PHOSPHATIZED. GAUGES TO COMPLY WITH SMACNA STANDARDS.

DUCT SEALANT: NON-HARDENING, NON-MIGRATING MASTIC OR LIQUID ELASTIC SEALANT (TYPE APPLICABLE FOR THE FABRICATIONINSTALLATION DETAIL) AS COMPOUNDED AND RECOMMENDED BY THE MANUFACTURER SPECIFICALLY FOR SEALING JOINTS AND SEAMS IN DUCTWORK.

DUCTWORK SUPPORT MATERIALS: EXCEPT AS OTHERWISE INDICATED, PROVIDE UPPER ATTACHMENT, HANGERS OF GALVANIZED STEEL STRAPS, OR STEEL RODS AND LOWER ATTACHMENT FOR SUPPORT OF DUCTWORK. HANGINGSUPPORT SYSTEMS SHALL BE IN ACCORDANCE WITH SMACNA REQUIREMENTS.

EXPOSED DUCTWORK SHALL BE DOUBLE-WALL SPIRAL PIPE WITH PAINT GRIP UNLESS OTHERWISE NOTED OR SUBSTITUTION APPROVED BY OWNER.

VOLUNTARY ALTERNATE EXPOSED DUCTWORK SHALL BE SINGLE-WALL SPIRAL PIPE UNLESS OTHERWISE NOTED OR SUBSTITUTION APPROVED BY OWNER. ALL EXPOSED DUCTWORK SHALL BE LINED IN LIEU OF WRAPPED. DUCT LINER THERMAL RESISTANCE SHALL MEET THE MINIMUM VALUES SPECIFIED IN PARAGRAPH 'DUCT INSULATION' BELOW.

DUCTWORK LOCATED OUTSIDE OF THE BUILDING ENVELOPE SHALL BE THERMADUCT PRODUCTS OR COVERED WITH 3M VENTURECLAD JACKETING, OR EQUAL PRODUCT, AND SEALED WEATHER-TIGHT.

DUCT INSULATION:

R-6 SUPPLY, OUTSIDE AND RETURN AIR DUCT INSULATION IN CONDITIONED AND UNCONDITIONED SPACES
R-8 SUPPLY AND RETURN AIR DUCT INSULATION OUTSIDE THE BUILDING
R-8 INSULATION BETWEEN DUCTS AND THE BUILDING EXTERIOR WHEN DUCTS ARE PART OF A BUILDING ASSEMBLY

SPECIFICATIONS

HEAT PUMP:

EQUIPMENT
— FACTORY ASSEMBLED, SINGLE PIECE, AIR-COOLED HEAT PUMP UNIT. CONTAINED WITHIN THE UNIT ENCLOSURE IS ALL FACTORY WIRING, PIPING, CONTROLS, COMPRESSOR, REFRIGERANT CHARGE OF R-410A, AND SPECIAL FEATURES REQUIRED PRIOR TO FIELD START--UP.

UNIT CABINET
— UNIT CABINET WILL BE CONSTRUCTED OF GALVANIZED STEEL, BONDERIZED, AND COATED WITH A POWDER COAT PAINT.

FANS
— CONDENSER FAN WILL BE DIRECT--DRIVE PROPELLER TYPE, DISCHARGING AIR UPWARD.
— CONDENSER FAN MOTORS WILL BE TOTALLY ENCLOSED, 1-PHASE TYPE WITH CLASS B INSULATION AND PERMANENTLY LUBRICATED BEARINGS.
— SHAFTS WILL BE CORROSION RESISTANT.
— FAN BLADES WILL BE STATICALLY AND DYNAMICALLY BALANCED.
— CONDENSER FAN OPENINGS WILL BE EQUIPPED WITH STEEL WIRE SAFETY GUARDS.

COMPRESSOR
— COMPRESSOR WILL BE HERMETICALLY SEALED.
— COMPRESSOR WILL BE MOUNTED ON RUBBER VIBRATION ISOLATORS.
CONDENSER COIL
— CONDENSER COIL WILL BE AIR COOLED.
— COIL WILL BE CONSTRUCTED OF ALUMINUM FINS MECHANICALLY BONDED TO COPPER TUBES WHICH ARE THEN CLEANED, DEHYDRATED, AND SEALED.

REFRIGERATION COMPONENTS
— REFRIGERATION CIRCUIT COMPONENTS WILL INCLUDE LIQUID-LINE SHUTOFF VALVE WITH SWEAT CONNECTIONS, VAPOR--LINE SHUTOFF VALVE WITH SWEAT CONNECTIONS, SYSTEM CHARGE OF R-410A REFRIGERANT, POE COMPRESSOR OIL, ACCUMULATOR, AND REVERSING VALVE.

SEE SCHEDULE FOR LIST OF ACCEPTABLE MANUFACTURERS.

FAN COIL UNIT:

GENERAL: EXCEPT AS OTHERWISE INDICATED, PROVIDE FAN COIL UNIT MANUFACTURER'S STANDARD MATERIALS AND COMPONENTS AS INDICATED BY PUBLISHED PRODUCT INFORMATION, DESIGNED AND CONSTRUCTED AS RECOMMENDED BY MANUFACTURER, AND AS REQUIRED FOR A COMPLETE INSTALLATION.

COOLING COILS: EXCEPT AS OTHERWISE INDICATED, PROVIDE MANUFACTURER'S STANDARD COIL OF INDICATED TYPE AND RATED FOR INDICATED CAPACITY. COPPER TUBE COILS, MECHANICALLY EXPANDED INTO ALUMINUM PLATE FINS; RATED AT 250 PSIG AND LEAK TESTED AT 350 PSIG MIN. AIR PRESSURE. PROVIDE MANUAL AIR VENTS.

ELECTRIC HEATING COILS SHALL BE AN OPEN GRID TYPE WITH FACTORY INSTALLED HIGH LIMIT CONTROL. HEATER SHALL BE FULLY ACCEPTABLE THROUGH THE DISCHARGE GRILLE OPENINGS.

THE FAN SHALL BE A CENTRIFUGAL, FORWARD CURVED, DOUBLE WIDTH, DOUBLE INLET, DIRECT DRIVE TYPE. BALANCED STATICALLY AND DYNAMICALLY, AND OF INDICATED CAPACITY.

MOTORS SHALL BE OF INDICATED CAPACITY, 3 SPEED, PERMANENT SPLIT CAPACITOR, INSTALLED FOR EASY REMOVAL. PROVIDE MOTORS WITH AUTOMATIC-RESET AND INTEGRAL THERMAL OVERLOAD PROTECTION. MOTORS SHALL BE CAPABLE OF OPERATING AT TEMPERATURES INDICATED ON DRAWINGS WITHOUT OVERLOADING. MOTOR SHALL BE CAPABLE OF FIELD OILING AS REQUIRED.

CABINETS: CABINETS SHALL BE FABRICATED OF 18 GAUGE STEEL AND HAVE BAKED ENAMEL FINISH. ALL SURFACES IN CONTACT WITH AIR STREAM SHALL BE INSULATED WITH HALF INCH THICK, 1-1/2 POUND DENSITY, MATT FACED, GLASS FIBER INSULATION.

THE FILTER SHALL BE ONE INCH THICK, THROWAWAY GLASS FIBER TYPE.

THE DRAIN PAN SHALL BE REMOVABLE AND HAVE SELF EXTINGUISHER THREE (3) POUND DENSITY CELLULAR POLYSTYRENE PLASTIC LINER, THE DRAIN PAN SHALL EXTEND UNDER THE ENTIRE COIL SECTION.

THERMOSTAT SHALL BE 7-DAY PROGRAMMABLE TYPE.

SEE SCHEDULE FOR LIST OF ACCEPTABLE MANUFACTURERS.

ELECTRIC WALL HEATER:

ELECTRIC WALL HEATERS SHALL BE QMARK MODEL AWH OR EQUAL.

THE HEATER ASSEMBLY WHICH FITS INTO THE BACK BOX SHALL CONSIST OF A FAN PANEL UPON WHICH IS MOUNTED ALL OF THE OPERATIONAL PARTS OF THE HEATER.

THE HEATING ELEMENT SHALL BE OF NON-GLOWING DESIGN CONSISTING OF AN 80/20 NICKEL-CHROMIUM RESISTANCE WIRE ENCLOSED IN A STEEL SHEATH TO WHICH PLATE FINS ARE COPPER BRAZED. IT SHALL BE WARRANTED FOR 5 YEARS.

THE FAN SHALL BE FIVE-BLADED ALUMINUM. THE FAN MOTOR SHALL BE TOTAL ENCLOSED.

FAN CONTROL SHALL BE OF BI-METALLIC, SNAP-ACTION TYPE AND SHALL ACTIVATE FAN AFTER HEATING ELEMENT REACHES OPERATING TEMPERATURE. THE FAN SHALL CONTINUE TO OPERATE AFTER THE THERMOSTAT IS SATISFIED AND UNTIL THE HEATING ELEMENT IS COOL.

THE TAMPER-PROOF THERMOSTAT SHALL BE OF BI-METALLIC, SNAP-ACTION TYPE WITH ENCLOSED CONTACTS. IT SHALL BE COMPLETELY CONCEALED BEHIND THE FRONT COVER TO BECOME TAMPER PROOF.

A THERMAL CUTOUT SHALL BE BUILT INTO THE SYSTEM TO SHUT OFF THE HEATER IN THE EVENT OF OVERHEATING.

A DOUBLE-POLE SINGLE THROW DISCONNECT SWITCH SHALL BE MOUNTED ON THE BACK BOX FOR POSITIVE DISCONNECT OF POWER SUPPLY. IT WILL BE COMPLETELY CONCEALED BEHIND THE FRONT GRID PANEL.

WHERE SCHEDULED, NORMALLY OPEN 24-VOLT AND 120-VOLT LOW VOLTAGE HOLDING COIL RELAYS SHALL BE AVAILABLE TO CONTROL HEATERS IN CONJUNCTION WITH CENTRAL ENERGY CONTROL SYSTEMS. THE BUILT-IN THERMOSTAT CAN THEN BE USED AS ONE OF THE THERMOSTATS IN AN AUTOMATIC NIGHT SET BACK OPERATION.

THE BACK BOX SHALL BE DESIGNED FOR DUTY AS RECESSED ROUGH-IN BOX IN EITHER MASONRY OR FRAME INSTALLATIONS AND IS ALSO USED WITH THE SURFACE MOUNTING FRAME IN SURFACE MOUNTING INSTALLATIONS. THE BACK BOX SHALL BE 20-GAUGE GALVANIZED STEEL AND SHALL CONTAIN KNOCKOUTS THROUGH WHICH POWER LEADS ARE BROUGHT.

THE FRONT PANEL SHALL BE OF THE BAR GRILLE TYPE AND SHALL BE CONSTRUCTED OF 16-GAUGE COLD-ROLLED STEEL, WELDED INTO A UNIFORM GRILLE AND FINISHED IN BAKED ENAMEL TO DIRECT THE WARMED AIR TOWARD THE FLOOR. THE FRONT GRILLE SHALL BE SURROUNDED BY A DECORATIVE SATIN-FINISH ALUMINUM FRAME.

THE HEATER SHALL BE MADE OF A BACK BOX, A HEATER ASSEMBLY, AND A FRONT PANEL.

REFER TO EQUIPMENT SCHEDULE FOR BASIS OF DESIGN AND ACCEPTABLE ALTERNATES.

PROFICIENT ENGINEERING
6991 Peachtree Industrial Blvd Building 700
Peachtree Corners, Georgia 30092
404.330.9798
PROJECT # 123309

LEGEND

SYMBOLS	DESCRIPTION
X1 / X2	DIFFUSER, GRILLE, REGISTER OR LOUVER TAG X1 = TYPE, X2 = CFM
	POSITIVE PRESSURE (AIR GOES OUT) DIFFUSER OR REGISTER, 4-WAY AIR PATTERN (UNLESS OTHERWISE NOTED)
	NEGATIVE PRESSURE (AIR GOES IN) GRILLE
	POSITIVE PRESSURE AIRFLOW (TYP. SUPPLY)
	NEGATIVE PRESSURE AIRFLOW (TYP. RETURN/EXHAUST)
	FLEXIBLE DUCT
	MANUAL VOLUME DAMPER (MVD)
	BACKDRAFT DAMPER (BDD)
FD	VERTICAL (TYP. WALL) FIRE DAMPER
FSD	VERTICAL (TYP. WALL) COMBINATION FIRE/SMOKE DAMPER
FD	HORIZONTAL (TYP. FLOOR/CEILING) FIRE DAMPER
FSD	HORIZONTAL (TYP. FLOOR/CEILING) COMBINATION FIRE/SMOKE DAMPER
T	THERMOSTAT
H	HUMIDISTAT
S	REMOTE TEMPERATURE SENSOR
	INTERNALLY LINED DUCT
	DUCT UP
	DUCT UP
	DUCT DOWN
	SUPPLY DUCT
UNIT #	EQUIPMENT TYPE EQUIPMENT NUMBER. WHERE A LETTER IS USED, THERE ARE MULTIPLE INSTANCES.

ABBREVIATIONS

AFF	ABOVE FINISHED FLOOR	M	MOTOR
BDD	BACKDRAFT DAMPER	MA	MAKE-UP AIR
AHU	AIR HANDLING UNIT	MAU	MAKE-UP AIR UNIT
CO2	CARBON DIOXIDE	MAV	MANUAL AIR VENT
CU	CONDENSING UNIT	MBH	1,000 BTU PER HR
D	CONDENSATE DRAIN	MFCU	MINI FAN COIL UNIT
DB	DRY BULB	MHP	MINI HEAT PUMP
DH	DEHUMIDIFIER	MVD	MANUAL VOLUME DAMPER
EA	EXHAUST AIR	NC	NORMALLY CLOSED
EAT	ENTERING AIR TEMPERATURE	NO	NORMALLY OPEN
EDH	ELECTRIC DUCT HEATER	OA	OUTSIDE AIR
EF	EXHAUST FAN	OBD	OPPOSED BLADE DAMPER
ESP	EXTERNAL STATIC PRESSURE	PIU	POWER INDUCTION UNIT
EWH	ELECTRIC WALL HEATER	RA	RETURN AIR
F	DEGREES FAHRENHEIT	RH	RELIEF HOOD
FCU	FAN COIL UNIT	RTU	ROOFTOP UNIT
FD	FIRE DAMPER	SA	SUPPLY AIR
FSD	COMBINATION FIRE/SMOKE DAMPER	SP	STATIC PRESSURE
FURN	FURNACE	U.N.O	UNLESS NOTED OTHERWISE
H	HUMIDISTAT	UC	UNDER CUT DOOR
IH	INTAKE HOOD	VAV	VARIABLE AIR VOLUME
LAT	LEAVING AIR TEMPERATURE	WB	WET BULB
LWT	LEAVING WATER TEMPERATURE	WL	WALL LOUVER

STROUD AND COMPANY
427 8th Street · Macon, Ga 31201
478-743-5097

ALL Architecture, LLC
2052 CHRYSLER DRIVE NE, ATLANTA, GA 30345
TELEPHONE: (404) 316-2896
E-MAIL: INFO@ALLARCHLLC.COM

REVISIONS

NO.	DATE

COPYRIGHT
THIS DRAWING AND ALL REPRODUCTIONS ARE COPYRIGHTED AND THE PROPERTY OF ALL ARCHITECTURE, LLC AND MAY NOT BE USED IN ANY WAY WITHOUT THEIR PERMISSION.

PROJECT TITLE:
HAMILTON DENTAL
222 CHAMBLESS LN,
HAMILTON, GA 31811

SEAL:
GEORGIA REGISTERED PROFESSIONAL ENGINEER No. 034608 JENNIFER DUCHAC

DRAWN: AC	CHECKED: JD
APPROVED: JD	ISSUE DATE: 07/25/23

CAD FILE NAME: CAD FILE

SHEET TITLE:
GENERAL

PROJECT NUMBER: 22016

SHEET NO:
M-000

SHEET OF

ISSUED FOR CONSTRUCTION

PLOT DATE: 12/11/2018 7:06:02 AM

DRYER VENT WALL BOX DETAIL

NO SCALE

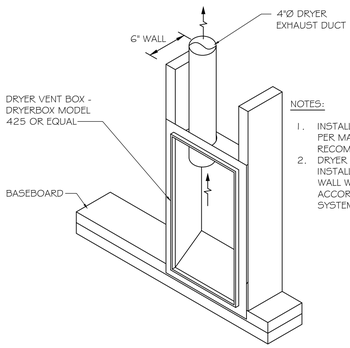

NOTES:

1. INSTALL DRYER VENT BOX PER MANUFACTURER'S RECOMMENDATIONS. DRYER BOX IS RATED TO BE INSTALLED IN A 1-HOUR WALL WHEN INSTALLED IN ACCORDANCE WITH U.L. SYSTEM NO. W-L-7129.

CONDENSATE TRAP (DRAW THROUGH UNIT)

NO SCALE

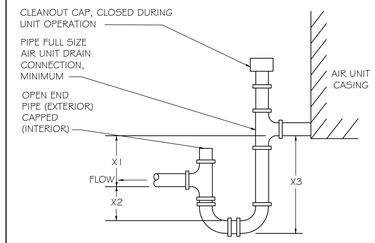

WHERE:

X1 =1" PLUS MAXIMUM NEGATIVE STATIC PRESSURE
X2 =HALF OF X1
X3 =X1+X2+PIPE Ø+INSULATION

NOTES

1. LOCATE TRAPS SO AS TO BE ACCESSIBLE FOR CLEANING.

DIFFUSER TAKE-OFF DETAIL

NO SCALE

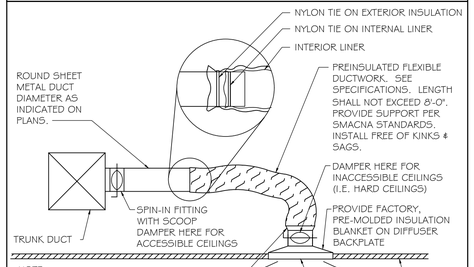

NOTE:

CONNECT FLEX DUCT ENDS TO SHEET METAL DUCT AND DIFFUSER NECK WITH NYLON TIES. INTERIOR LINER AND EXTERIOR INSULATION OF FLEX DUCT TO BE TIED INDIVIDUALLY. INSTALL USING TENSIONING TOOL AS PER MANUFACTURER'S RECOMMENDATIONS.

WHERE BRANCH DUCT SIZE DIFFERS FROM SCHEDULED DIFFUSER NECK SIZE, CONTRACTOR SHALL PROVIDE NECESSARY TRANSITION.

SPECIFICATIONS

ROOFTOP UNITS:

GENERAL
OUTDOOR, ROOFTOP MOUNTED, ELECTRICALLY CONTROLLED, HEATING AND COOLING UNIT UTILIZING A FULLY HERMETIC SCROLL COMPRESSOR(S) FOR COOLING DUTY AND GAS COMBUSTION FOR HEATING DUTY.
FACTORY ASSEMBLED, SINGLE-PIECE HEATING AND COOLING ROOFTOP UNIT. CONTAINED WITHIN THE UNIT ENCLOSURE SHALL BE ALL FACTORY WIRING, PIPING, CONTROLS, AND SPECIAL FEATURES REQUIRED PRIOR TO FIELD START-UP.
UNIT SHALL USE ENVIRONMENTALLY SOUND, PURON® REFRIGERANT.
UNIT SHALL BE INSTALLED IN ACCORDANCE WITH THE MANUFACTURER'S INSTRUCTIONS.
UNIT MUST BE SELECTED AND INSTALLED IN COMPLIANCE WITH LOCAL, STATE, AND FEDERAL CODES.

UNIT CABINET
UNIT CABINET SHALL BE CONSTRUCTED OF GALVANIZED STEEL, AND SHALL BE BONDERIZED AND COATED WITH A PRE-PAINTED BAKED ENAMEL FINISH ON ALL EXTERNALLY EXPOSED SURFACES.

STANDARD ALUMINUM/COPPER COILS:
STANDARD EVAPORATOR AND CONDENSER COILS SHALL HAVE ALUMINUM LANCED PLATE FINS MECHANICALLY BONDED TO SEAMLESS INTERNALLY GROOVED COPPER TUBES WITH ALL JOINTS BRAZED.
EVAPORATOR COILS SHALL BE LEAK TESTED TO 150 PSIG, PRESSURE TESTED TO 450 PSIG, AND QUALIFIED TO UL 1995 BURST TEST AT 1775 PSIG.
CONDENSER COILS SHALL BE LEAK TESTED TO 150 PSIG, PRESSURE TESTED TO 650 PSIG, AND QUALIFIED TO UL 1995 BURST TEST AT 1980 PSIG.

COMPRESSORS
UNIT SHALL USE FULLY HERMETIC, SCROLL COMPRESSOR FOR EACH INDEPENDENT REFRIGERATION CIRCUIT.

FILTER SECTION
FILTERS ACCESS IS SPECIFIED IN THE UNIT CABINET SECTION OF THIS SPECIFICATION.
FILTERS SHALL BE HELD IN PLACE BY A PIVOTING FILTER TRAY, FACILITATING EASY REMOVAL AND INSTALLATION.
SHALL CONSIST OF FACTORY-INSTALLED, LOW VELOCITY, THROW-AWAY 2-IN. THICK FIBERGLASS FILTERS.
FILTERS SHALL BE STANDARD, COMMERCIALLY AVAILABLE SIZES.

EVAPORATOR FAN AND MOTOR
EVAPORATOR FAN MOTOR:
SHALL HAVE PERMANENTLY LUBRICATED BEARINGS.
SHALL HAVE INHERENT AUTOMATIC-RESET THERMAL OVERLOAD PROTECTION OR CIRCUIT BREAKER.
SHALL HAVE A MAXIMUM CONTINUOUS BHP RATING FOR CONTINUOUS DUTY OPERATION; NO SAFETY FACTORS ABOVE THAT RATING SHALL BE REQUIRED.
BELT-DRIVEN EVAPORATOR FAN:
BELT DRIVE SHALL INCLUDE AN ADJUSTABLE-PITCH MOTOR PULLEY.
SHALL USE SEALED, PERMANENTLY LUBRICATED BALL-BEARING TYPE.
BLOWER FAN SHALL BE DOUBLE-INLET TYPE WITH FORWARD-CURVED BLADES.
SHALL BE CONSTRUCTED FROM STEEL WITH A CORROSION RESISTANT FINISH AND DYNAMICALLY BALANCED.

CONDENSER FANS AND MOTORS
CONDENSER FAN MOTORS:
SHALL BE A TOTALLY ENCLOSED MOTOR.
SHALL USE PERMANENTLY LUBRICATED BEARINGS.
SHALL HAVE INHERENT THERMAL OVERLOAD PROTECTION WITH AN AUTOMATIC RESET FEATURE.
SHALL USE A SHAFT-DOWN DESIGN ON 04 TO 12 MODELS AND SHAFT-UP ON 14 SIZE WITH RAIN SHIELD.
CONDENSER FANS:
SHALL BE A DIRECT-DRIVEN PROPELLER TYPE FAN.
SHALL HAVE ALUMINUM BLADES RIVETED TO CORROSION-RESISTANT STEEL SPIDERS AND SHALL BE DYNAMICALLY BALANCED.

ACCESSORIES: REFER TO THE EQUIPMENT SCHEDULE FOR A COMPLETE LISTING OF REQUIRED ACCESSORIES.

SMOKE DETECTORS:
SHALL BE A FOUR-WIRE CONTROLLER AND DETECTOR.
SHALL BE ENVIRONMENTAL COMPENSATED WITH DIFFERENTIAL SENSING FOR RELIABLE, STABLE, AND DRIFT-FREE SENSITIVITY.
SHALL USE MAGNET-ACTIVATED TEST/RESET SENSOR SWITCHES.
SHALL HAVE TOOL-LESS CONNECTION TERMINAL ACCESS.
SHALL HAVE A RECESSED MOMENTARY SWITCH FOR TESTING AND RESETTING THE DETECTOR.
CONTROLLER SHALL INCLUDE:
(1.) ONE SET OF NORMALLY OPEN ALARM INITIATION CONTACTS FOR CONNECTION TO AN INITIATING DEVICE CIRCUIT ON A FIRE ALARM CONTROL PANEL.
(2.) TWO FORM-C AUXILIARY ALARM RELAYS FOR INTERFACE WITH ROOFTOP UNIT OR OTHER EQUIPMENT.
(3.) ONE FORM-C SUPERVISION (TROUBLE) RELAY TO CONTROL THE OPERATION OF THE TROUBLE LED ON A REMOTE TEST/RESET STATION.
(4.) CAPABLE OF DIRECT CONNECTION TO TWO INDIVIDUAL DETECTOR MODULES.
(5.) CAN BE WIRED TO UP TO 14 OTHER DUCT SMOKE DETECTORS FOR MULTIPLE FAN SHUTDOWN APPLICATIONS

THERMOSTATS:
ELECTRIC, SOLID-STATE, MICROCOMPUTER-BASED ROOM THERMOSTAT.
AUTOMATIC SWITCHING FROM HEATING TO COOLING.
PREFERENTIAL RATE CONTROL TO MINIMIZE OVERSHOOT AND DEVIATION FROM SET POINT.
SET UP FOR FOUR SEPARATE TEMPERATURES PER DAY.
INSTANT OVERRIDE OF SET POINT FOR CONTINUOUS OR TIMED PERIOD FROM 1 HOUR TO 31 DAYS.
SHORT-CYCLE PROTECTION.
PROGRAMMING BASED ON EVERY DAY OF WEEK.
SELECTION FEATURES INCLUDE DEGREE F DISPLAY, 12- OR 24-HOUR CLOCK, KEYBOARD DISABLE, REMOTE SENSOR, AND FAN ON-AUTO.
BATTERY REPLACEMENT WITHOUT PROGRAM LOSS.
THERMOSTAT DISPLAY FEATURES INCLUDE THE FOLLOWING:
TIME OF DAY.
ACTUAL ROOM TEMPERATURE.
PROGRAMMED TEMPERATURE.
PROGRAMMED TIME.
DURATION OF TIMED OVERRIDE.
DAY OF WEEK.
SYSTEM MODE INDICATIONS INCLUDE "HEATING," "OFF," "FAN AUTO," AND "FAN ON."

ELECTRIC HEAT:
HEATER ELEMENT OPEN COIL RESISTANCE WIRE, NICKEL-CHROME ALLOY, 0.29 INCHES INSIDE DIAMETER, STRUNG THROUGH CERAMIC INSULATORS MOUNTED ON METAL FRAME. COIL ENDS ARE STAKED AND WELDED TO TERMINAL SCREW SLOTS.

HEATER ASSEMBLIES ARE PROVIDED WITH INTEGRAL FUSING FOR PROTECTION OF INTERNAL HEATER CIRCUITS NOT EXCEEDING 48 AMPS EACH. AUTO RESET THERMO LIMIT CONTROLS, MAGNETIC HEATER CONTACTORS (24 V COIL) AND TERMINAL BLOCK ALL MOUNTED IN ELECTRIC HEATER CONTROL BOX (MINIMUM 18 GA GALVANIZED STEEL) ATTACHED TO END OF HEATER ASSEMBLY.

DUCTLESS SPLIT SYSTEM

WALL-MOUNTED INDOOR UNIT
STANDARD PREFILTER IS INCLUDED WITH INDOOR UNIT
CHOICE OF FAN SPEEDS: LOW, MEDIUM, HIGH
INDOOR UNIT POWERED FROM OUTDOOR UNIT
AUTO RESTART FOLLOWING A POWER OUTAGE
BASE HEATER
LIMITED WARRANTY: FIVE YEARS ON PARTS AND DEFECTS AND SEVEN YEARS ON THE COMPRESSOR

SEE SCHEDULE FOR LIST OF ACCEPTABLE MANUFACTURERS.

ROOFTOP CONDENSING UNIT/HEAT PUMP STAND

NO SCALE

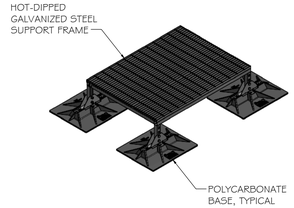

ROOFTOP CONDENSING UNIT / HEAT PUMP STAND:
ROOFTOP CONDENSING UNITS AND HEAT PUMPS SHALL BE SUPPORTED BY PREFABRICATED SYSTEMS.

SYSTEM SHALL BE SIZED AND CUSTOM DESIGN BY MANUFACTURER.

PREFABRICATED SYSTEM SHALL BE MODEL HD BY MIRO INDUSTRIES OR EQUIVALENT.

SUPPORTS SHALL BE SPACED T INTERVALS SO AS TO ALLOW PROPER INSTALLATION AND OPERATION OF SUPPORTED EQUIPMENT.

VERTICAL FAN COIL UNIT DETAIL

NO SCALE

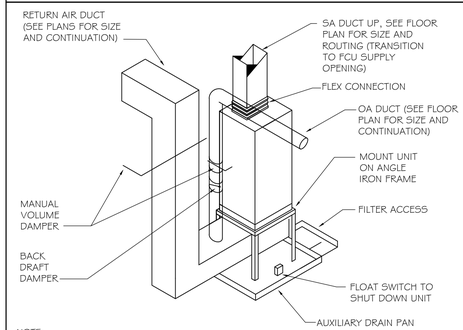

NOTE:

ROUTE PRIMARY CONDENSATE LINE TO HUB DRAIN, SEE PLMB. DWGS.

DUCTWORK DETAILS

NO SCALE

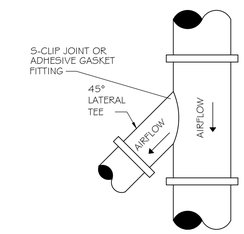

ROUND - ROUND

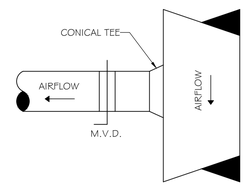

RECTANGULAR - ROUND

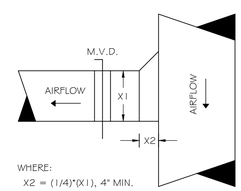

WHERE:
X2 = (1/4)*(X1), 4" MIN.

RECTANGULAR - RECTANGULAR

REFRIGERANT LINE SET ROOF JACK

NO SCALE

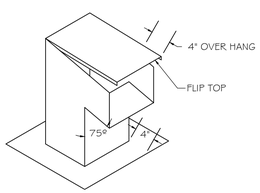

NOTES:

- ROOF JACK SHALL BE EQUAL TO CROWN PRODUCTS COMPANY, MODEL No. 353.
- ROOF JACK SHALL BE FABRICATED FROM HOT DIPPED GALVANIZED STEEL. SHEET SHALL BE OF LOCK FORMING QUALITY PER ASTM-A653 CS TYPE B.
- SEAMS SHALL BE SEALED WITH SILICONE SEALANT.
- ROOF JACK SHALL FEATURE A "FLIP TOP" DESIGN FOR EASE OF LINE SET INSTALLATION.
- ROOF JACK SHALL INCLUDE A 4" OVERHANG FOR ADDITIONAL COVERAGE OF REFRIGERANT LINES.
- ROOF JACK IS OFFERED IN THE FOLLOWING SIZES: 4X4, 6X6, 8X8, 10X10. SIZE SHALL BE FIELD COORDINATED WITH NUMBER OF LINE SETS AT EACH LOCATION.

DRYER EXHAUST DETAIL

NO SCALE

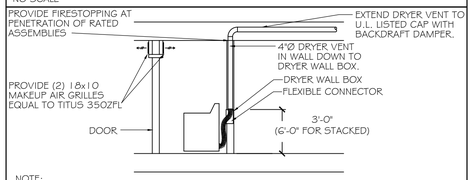

NOTE:

1. EXHAUST DUCT VENT PIPE FOR CLOTHES DRYERS SHALL BE SHEET METAL, MINIMUM 26 GAUGE, AND HAVE A SMOOTH INTERIOR FINISH AND SHALL BE MINIMUM OF 4"Ø. THE ENTIRE EXHAUST SYSTEM SHALL BE SUPPORTED AND SECURED IN PLACE WITH NO PENETRATIONS OF THE DUCTWORK. THE MALE END OF THE DUCT AT OVERLAPPED DUCT JOINTS SHALL EXTEND IN THE DIRECTION OF AIRFLOW.
2. DRYER EXHAUST DUCT SHALL TERMINATE IN WALL AT A DRYER WALL BOX. THE BOX SHALL HAVE A CONNECTION IN THE VERTICAL POSITION FOR FLEXIBLE CONNECTOR TO DRYER COLLAR.
3. CLEAN-OUT OF THE DRYER VENT EXHAUST SYSTEM CAN BE ACCOMPLISHED BY REMOVING THE FLEXIBLE CONNECTOR AND REMOVING ANY EXCESS DRYER LINT.
4. THE ENTIRE DRYER EXHAUST VENT SYSTEM SHALL BE IN ACCORDANCE WITH THE LATEST LOCAL MECHANICAL CODES AND AMENDMENTS.
5. IF LAUNDRY CLOSET DOOR IS LOUVERED, MAKEUP AIR GRILLES MAY BE OMITTED.

PROFICIENT ENGINEERING
6991 Peachtree Industrial Blvd Building 700
Peachtree Corners, Georgia 30092
404.330.9798
PROJECT # 123309

STROUD AND COMPANY
427 8th Street : Macon, Ga 31201
478-743-5097

ALL Architecture, LLC
2052 CHRYSLER DRIVE NE, ATLANTA, GA 30345
TELEPHONE: (404) 316-2896
E-MAIL: INFO@ALLARCHLLC.COM

REVISIONS

NO.	DATE

COPYRIGHT
THIS DRAWING AND ALL REPRODUCTIONS ARE COPYRIGHTED AND THE PROPERTY OF ALL ARCHITECTURE, LLC AND MAY NOT BE USED IN ANY WAY WITHOUT THEIR PERMISSION.

PROJECT TITLE:

HAMILTON DENTAL
222 CHAMBLESS LN.
HAMILTON, GA 31811

SEAL:

DRAWN:	CHECKED:
AC	JD
APPROVED:	ISSUE DATE:
JD	07/25/23

CAD FILE NAME: CAD FILE

SHEET TITLE:

DETAILS

PROJECT NUMBER: 22016

SHEET NO:

M-001

SHEET OF

ISSUED FOR CONSTRUCTION

PLOT DATE: 12/11/2018 7:06:02 AM

ROOFTOP UNIT DETAIL

NO SCALE

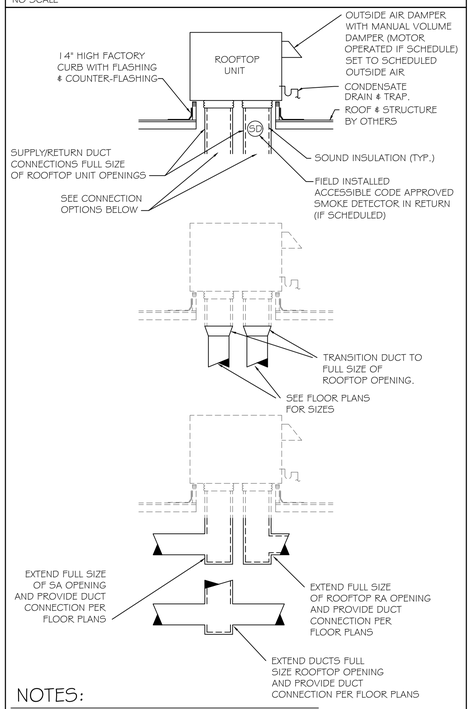

NOTES:

1. REFER TO FLOOR PLANS TO DETERMINE WHICH CONNECTION SHALL BE INSTALLED.
2. COORDINATE EXACT LOCATION OF ROOF OPENING WITH ARCHITECT AND STRUCTURAL.
3. WHERE SUPPLY AIR BY-PASS IS SCHEDULED, PROVIDE BY-PASS IN ROOF CURB WITH MANUAL VOLUME DAMPER ACCESSIBLE FROM ROOF.
4. CONSTANT VOLUME RTUs WITH ECONOMIZERS SHALL INCLUDE MOTORIZED DAMPERS IN BOTH THE OUTDOOR AIR AND RETURN FOR ECONOMIZER CONTROL.
5. CONSTANT VOLUME RTUs WITHOUT ECONOMIZERS SHALL INCLUDE A MOTORIZED OUTDOOR AIR INTAKE DAMPER AND A MANUAL VOLUME DAMPER IN RETURN DUCT FOR BALANCING. MANUAL VOLUME DAMPER IN OUTDOOR AIR INTAKE IS ONLY ACCEPTABLE WHERE MOTORIZED IS NOT OFFERED BY THE RTU MANUFACTURER.

FIRE DAMPER (FD) - TYPE B MOUNTING

NO SCALE

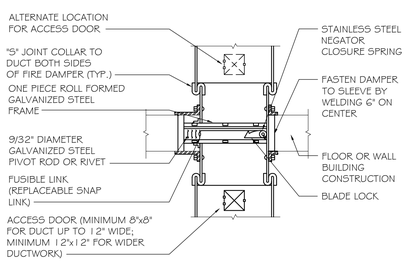

NOTE:

FIRE DAMPER INSTALLATION TO MEET UL REQUIREMENTS.

ROOFTOP DIRECT EXPANSION (DX) EQUIPMENT

MARK	SERVES	TOTAL S.A. (CFM)	O.A. (CFM)	E.S.P. (IN WG)	AUX. ELEC. HEATER (KW)	MIN. EER	MIN. HSPF *COP 47 / 17 F	REFR.	BASIS OF DESIGN	WEIGHT (LBS.)	NOMINAL TONNAGE	MINIMUM COOLING CAPACITY TOTAL (MBH)	SENS (MBH)	LAT (MBH)	Ent. Tdb (°F)	Ent. Twb (°F)	Lvg. Tdb (°F)	Lvg. Twb (°F)	REMARKS 1	2	3	4	5	6	7	8	9	10
RTU-1	TRAINING	1,990	350	0.50	12.0	11.8	--*--	R-410a	50FCQA06	584.0	5.0	62.0	44.4	17.5	78.2	66.3	56.8	55.8	X	X	X	X		X	X			
RTU-2	LEVEL TWO SOUTH	1,200	175	0.50	6.5	11.8	8.2	R-410a	50FCQA04	467.0	3.0	38.4	27.2	11.2	77.6	65.9	56.0	55.0	X	X			X	X	X			
RTU-3	LEVEL TWO NORTH	1,600	180	0.50	12.0	11.8	8.2	R-410a	50FCQA05	473.0	4.0	49.0	35.2	13.8	77.0	65.5	56.0	55.0	X	X			X	X	X			
RTU-4	LEVEL TWO INTERIOR	1,200	200	0.50	6.5	11.5	8.0	R-410a	50VT-B42	435.0	3.5	39.4	27.6	11.8	78.0	66.2	56.0	55.0	X	X			X	X	X	X		

NOTES (APPLY TO ALL):

A. SEE ELECTRICAL DRAWINGS FOR ELECTRICAL POWER INFORMATION.

B. SUBMITTED UNIT CAPACITIES SHOULD BE WITHIN +/-10% OF SCHEDULED CAPACITIES.

C. DESIGN IS BASED ON PRODUCTS BY CARRIER. ACCEPTABLE ALTERNATES SHALL BE BY TRANE, LENNOX, DAIKIN, OR JCI. SHOULD AN ALTERNATE MANUFACTURER BE PROVIDED, THE MECHANICAL CONTRACTOR SHALL BE FULLY RESPONSIBLE FOR COORDINATING EQUIPMENTS ELECTRICAL CHARACTERISTICS WITH THE ELECTRICAL CONTRACTOR.

D. ALL UNITS SHALL BE INSTALLED WITH AN ELECTRONIC WATER LEVEL DETECTOR IN THE PRIMARY DRAIN PAN. THE WATER LEVEL DETECTOR SHALL BE INSTALLED AT A POINT HIGHER THAN THE PRIMARY DRAIN LINE AND LOWER THAN THE DRAIN PAN OVERFLOW RIM. THE WATER LEVEL DETECTOR SHALL BE WIRED TO SHUTDOWN THE UNIT UPON DETECTION OF WATER.

E. UNITS SHALL BE DOE 2023 COMPLIANT.

REMARKS (APPLY AS SCHEDULED):

1. NON POWERED WEATHER PROOF GFCI RECEPTICLE.
2. FACTORY DISCONNECT SWITCH.
3. AIRSIDE ENTHALPY ECONOMIZER WITH MOTORIZED RETURN AND OUTDOOR AIR DAMPERS.
4. POWERED EXHAUST. POWERED EXHAUST SHALL RUN ONLY WHEN UNIT IS IN ECONOMIZER MODE.
5. MOTORIZED OUTDOOR AIR DAMPER.
6. FACTORY INSULATED ROOF CURB.
7. LOW AMBIENT COOLING KIT.
8. PROVIDE AND INSTALL BIPOLAR IONIZATION UNIT. REFER TO AIR PURIFICATION SCHEDULE.

SPLIT DIRECT EXPANSION (DX) EQUIPMENT

INDOOR UNIT									OUTDOOR UNIT		COMBINED COOLING CAPACITIES																	
MARK	SERVES	TOTAL S.A. (CFM)	O.A. (CFM)	E.S.P. (IN WG)	MOTOR (hp)	AUXILIARY HEATER (kW)	WEIGHT (LBS)	BASIS OF DESIGN	WEIGHT (LBS)	BASIS OF DESIGN	NOMINAL TONNAGE (TONS)	COOLING TOTAL (MBH)	SENS (MBH)	LAT (MBH)	Ent. Tdb (°F)	Ent. Twb (°F)	Lvg. Tdb (°F)	Lvg. Twb (°F)	REMARKS 1	2	3	4	5	6	7	8	9	10	11
FCU-1 / HP-1	LOBBY	1,200	100	0.50	1/2 ECM	7.5	207.0	FV4CNB006	269.0	25HCB636	3.0	34.5	25.7	8.8	76.6	64.9	56.0	55.0	X	X	X	X	X	X	X		X		
FCU-2 / HP-2	EXAM SOUTH	1,200	210	0.50	1/2 ECM	7.5	207.0	FV4CNB006	269.0	25HCB636	3.0	38.3	27.8	10.4	78.3	65.9	56.0	55.0		X	X	X	X	X	X		X	X	X
FCU-3 / HP-3	EXAM NORTH	1,200	235	0.50	1/2 ECM	7.5	207.0	FV4CNB006	269.0	25HCB636	3.0	37.5	27.7	9.9	78.7	66.1	56.5	55.5		X	X	X	X	X	X		X	X	X
FCU-4 / HP-4	LEVEL ONE INTERIOR	800	150	0.50	1/3 ECM	6.0	112.0	FB4CNF030	160.0	25HCE424	2.0	25.9	18.8	7.1	78.5	66.0	56.0	55.0	X	X	X	X	X	X	X	X	X		

NOTES (APPLY TO ALL):

A. SEE ELECTRICAL DRAWINGS FOR POWER REQUIREMENTS.

B. SUBMITTED UNIT CAPACITIES SHOULD BE WITHIN +/-10% OF SCHEDULED CAPACITIES.

C. BASIS OF DESIGN: CARRIER. REFER TO SPECIFICATIONS.
ACCEPTABLE ALTERNATES: JCI/YORK, TRANE, DAIKIN/MCQUAY, LENNOX

D. ALL EVAPORATORS AND COOLING COILS LOCATED ABOVE THE LOWEST LEVEL FINISHED FLOOR SHALL BE INSTALLED WITH AN AUXILIARY CONDENSATE DRAIN PAN UNDER THE UNIT. PROVIDE AN ELECTRONIC WATER LEVEL DETECTOR WIRED TO SHUTDOWN THE UNIT UPON DETECTION OF WATER IN THE AUXILIARY DRAIN PAN.

E. AS AN ALTERNATIVE TO THE AUXILIARY CONDENSATE DRAIN PAN, AN ELECTRONIC WATER LEVEL DETECTOR WIRED TO SHUTDOWN THE UNIT UPON DETECTION OF WATER MAY BE INSTALLED IN THE PRIMARY DRAIN LINE, THE OVERFLOW DRAIN LINE OR THE EQUIPMENT SUPPLIED DRAIN PAN. THE WATER LEVEL DETECTOR SHALL BE LOCATED AT A POINT HIGHER THAN THE PRIMARY DRAIN LINE CONNECTION AND BELOW THE OVERFLOW RIM OF SUCH PAN.

F. UNITS SHALL BE DOE 2023 COMPLIANT.

REMARKS (APPLY AS SCHEDULED):

1. PROGRAMMABLE THERMOSTAT.
2. LOW AMBIENT PACKAGE
3. DISPOSABLE FILTER.
4. ANTI-SHORT CYCLE TIMER.
5. INDOOR FAN DELAY KIT.
6. DISCONNECT SWITCH PROVIDED BY ELECTRICAL SUBCONTRACTOR AT BOTH THE INDOOR AND OUTDOOR UNIT. REFER TO THE ELECTRICAL DOCUMENTS.
7. MOUNT OUTDOOR HEAT PUMP ON CONCRETE HOUSEKEEPING PAD. PAD SHALL BE A MINIMUM 4" THICK AND SHALL EXTEND 6" BEYOND UNIT ON ALL SIDES.
8. PROVIDE AND INSTALL BIPOLAR IONIZATION UNIT. REFER TO AIR PURIFICATION SCHEDULE.
9. DOWNFLOW UNIT CONFIGURATION.
10. TWO STAGE COOLING.
11. PROGRAMMABLE THERMOSTAT WITH HUMIDITY CONTROL.

ELECTRIC WALL HEATER

MARK	CFM	WATTS	HEAT (BTU/H)	BASIS OF DESIGN	REMARKS 1	2	3	4	5	6
EWH-1	100	3000	10235	QMARK AWH	X	X	X	X	X	X
EWH-2	100	4800	16380	QMARK AWH	X	X	X	X	X	X
EWH-3	100	1500	5120	QMARK AWH	X	X	X	X	X	X

REMARKS:

1. INTEGRAL THERMOSTAT TO MAINTAIN MINIMUM 45°F (ADJUSTABLE).
2. COORDINATE ELECTRICAL CHARACTERISTICS WITH ELECTRICAL CONTRACTOR.
3. FAN DELAY SWITCH.
4. THERMAL CUTOUT.
5. FACTORY DISCONNECT SWITCH.
6. SURFACE MOUNTING KIT.

GRAVITY VENTILATORS

MARK	MODEL/ SERIES	TYPE	SERVICE	CFM	THROAT AREA (SF)	THROAT VELOCITY (FPM)	MAX SP (IN WC)	REMARKS 1	2	3	4	5
IH-1	GRSI	INTAKE	FCU OUTDOOR AIR	695	1.45	479	0.05	X	X	X	X	

REMARKS:

1. INSULATED HOOD
2. ALUMINUM BIRDSCREEN
3. GRAVITY BACKDRAFT DAMPER
4. FACTORY, INSULATED, ROOF CURB

PROFICIENT ENGINEERING
6991 Peachtree Industrial Blvd Building 700
Peachtree Corners, Georgia 30092
404.330.9798
PROJECT # 123309

STROUD AND COMPANY
427 8th Street · Macon, Ga 31201
478-743-5097

ALL Architecture, LLC
2052 CHRYSLER DRIVE NE, ATLANTA, GA 30345
TELEPHONE: (404) 316-2896
E-MAIL: INFO@ALLARCHLLC.COM

REVISIONS

NO.	DATE

COPYRIGHT
THIS DRAWING AND ALL REPRODUCTIONS ARE COPYRIGHTED AND THE PROPERTY OF ALL ARCHITECTURE, LLC AND MAY NOT BE USED IN ANY WAY WITHOUT THEIR PERMISSION.

PROJECT TITLE:

HAMILTON DENTAL
222 CHAMBLESS LN,
HAMILTON, GA 31811

SEAL:

GEORGIA REGISTERED No. 034608 PROFESSIONAL ENGINEER JENNIFER DUCHAC

DRAWN: AC	CHECKED: JD
APPROVED: JD	ISSUE DATE: 07/25/23

CAD FILE NAME: CAD FILE

SHEET TITLE:

SCHEDULES

PROJECT NUMBER: 22016

SHEET NO:

M-002

SHEET OF

ISSUED FOR CONSTRUCTION

PLOT DATE: 12/11/2018 7:06:02 AM

AIR PURIFICATION SCHEDULE

ZONE TAG	FLOW	S/A FLOW	O/A FLOW	GPS MODEL	PRESSURE DROP	VOLTAGE (AC)	WATTS	MOUNTING LOCATION	MIN ION DENSITY (IONS/CC)	NOTES
FCU-1	CV	1200	100	GPS-FC24-AC	0.05" W.C.	24-240	8	AHU	300 MILLION	1 TO 8
FCU-4	CV	800	150	GPS-FC24-AC	0.05" W.C.	24-240	8	AHU	300 MILLION	1 TO 8
RTU-4	CV	1200	200	GPS-FC24-AC	0.05" W.C.	24-240	8	AHU	300 MILLION	1 TO 8

1. BASIS OF DESIGN: GLOBAL PLASMA SOLUTIONS: APPROVED EQUALS BY AIRGENICS AND BIOXGEN SUBJECT TO SPECIFICATION COMPLIANCE
2. MOUNT BI-POLAR ION GENERATOR WHERE INDICATED ON SCHEDULE
3. IF CONTRACTOR SUBSTITUTES BASIS OF DESIGN WITH ANOTHER MANUFACTURER, CONTRACTOR SHALL COORDINATE ALL ELECTRICAL AND MECHANICAL CHANGES.
4. BI-POLAR IONIZATION SYSTEMS REQUIRING PERISHABLE GLASS TUBES ARE NOT ACCEPTABLE
5. ALL MANUFACTURERS MUST PASS UL-867-2007 OZONE CHAMBER TESTING BY EITHER UL OR ETL
6. PROVIDE WITH WEATHERPROOF ENCLOSURE.
7. PROVIDE WITH SELF-CLEANING FEATURE. SYSTEMS WITHOUT SELF-CLEANING SHALL NOT BE ACCEPTABLE.
8. PROVIDE STEP-DOWN TRANSFORMER.

DIFFUSER, GRILLE, AND REGISTER SCHEDULE

CALLOUT	DESCRIPTION	FACE SIZE (IN)	INLET SIZE (IN)	NOISE CRITERIA @ MAX CFM	MODEL
ES0606	EGGCRATE GRILLE	6x6	6x6	25	TITUS 50F
RC2412	EGGCRATE GRILLE	24x12	24x12	25	TITUS 50F
RC2424	EGGCRATE GRILLE	24x24	24x24	25	TITUS 50F
SC0804	DOUBLE DEFLECTION REGISTER	10x6	8x4	25	TITUS 300FS
SCP06	SUPPLY CEILING PLAQUE DIFFUSER	24x24	6Ø	25	TITUS OMNI
SCP08	SUPPLY CEILING PLAQUE DIFFUSER	24x24	8Ø	25	TITUS OMNI
SCP10	SUPPLY CEILING PLAQUE DIFFUSER	24x24	10Ø	25	TITUS OMNI

A. AIR DEVICE (I.E. DIFFUSERS, REGISTERS AND GRILLES) COLOR SELECTION SHALL BE MADE BY ARCHITECT. CONTRACTOR SHALL SUBMIT COLOR/FINISH CHARTS FOR ARCHITECTURAL REVIEW AND SELECTION.
B. THE CONTRACTOR SHALL COORDINATE AIR DEVICE FRAME AND/OR SUSPENSION TYPE WITH THE ARCHITECTURAL REFLECTED CEILING PLAN.

DUCTLESS SPLIT DIRECT EXPANSION (DX) EQUIPMENT

INDOOR UNIT						OUTDOOR UNIT				COMBINED CAPACITIES	
MARK	SERVES	TYPE	MODEL/SERIES	NOMINAL TONS	CFM	MARK	MIN. SEER	MIN. HSPF	MODEL/SERIES	COOLING TOTAL (MBH)	HEATING @ 47°F (MBH)
MFCU-1	EQUIPMENT ROOM	WALL-MOUNTED, HEAT PUMP	40MAQB12B--3	1.00	210/300/360/380	MHP-1	22.5	12.0	38MAQB12R--3	12.0	11.8

NOTES (APPLY TO ALL):

A. BASIS OF DESIGN: CARRIER. EQUAL PRODUCTS: DAIKIN, LENNOX, SAMSUNG, LG, SANYO, MITSUBISHI, JCI/YORK.
B. SINGLE POWER CONNECTION AT OUTDOOR UNIT. DISCONNECT SWITCHES PROVIDED AT THE INDOOR AND OUTDOOR UNITS BY ELECTRICAL SUBCONTRACTOR. REFER TO THE ELECTRICAL DOCUMENTS.
C. R-410A REFRIGERANT.
D. FACTORY CONDENSATE PUMP OR CONDENSATE LIFT MECHANISM.
E. WALL MOUNTED WIRED REMOTE CONTROLLER.
F. INVERTER DRIVEN COMPRESSOR.
G. MOUNT OUTDOOR UNIT ON CONCRETE HOUSEKEEPING PAD. PAD SHALL BE A MINIMUM OF 4" THICK AND SHALL EXTEND 6" BEYOND UNIT ON ALL SIDES.
H. REFRIGERANT LINE SET TOTAL EQUIVALENT LENGTH SHALL NOT EXCEED 82 FEET. SHOULD AN ALTERNATE MANUFACTURER BE USED, CONTRACTOR SHALL COMPLY WITH ALTERNATE MANUCAFTURER LINE SET LIMITATIONS.
I. UNITS SHALL BE DOE 2023 COMPLIANT.

FAN SCHEDULE

MARK	DUTY	TYPE	CFM	ESP (IN WG)	MOTOR (W / HP*)	DRIVE	MAX NOISE (SONES)	CONTROL BY	BASIS OF DESIGN MODEL	REMARKS 1	2	3	4	5
EF-A	EXHAUST	CEILING CABINET	70	0.5	100	DIRECT	2.0	SWITCHED WITH LIGHTS	GREENHECK SP	X	X	X		
EF-1	EXHAUST	CEILING CABINET	140	0.5	150	DIRECT	3.5	SWITCHED WITH LIGHTS	GREENHECK SP	X	X	X		
EF-2	EXHAUST	CEILING CABINET	30	0.5	45	DIRECT	2.5	SWITCHED WITH LIGHTS	GREENHECK SP	X	X	X		
EF-3	EXHAUST	CEILING CABINET	90	0.5	100	DIRECT	2.0	THERMOSTAT	GREENHECK SP	X	X	X		
EF-4	EXHAUST	IN-LINE CENTRIFUGAL	200	0.5	1/12 *	DIRECT	7.3	TIMER (REMARK 4)	GREENHECK SQ	X	X	X	X	

NOTES (APPLY TO ALL):

A. SEE ELECTRICAL PLANS FOR POWER CHARACTERISTICS
B. DESIGN IS BASED ON PRODUCTS BY GREENHECK. ACCEPTABLE ALTERNATES SHALL BE BY LOREN-COOK, TWIN-CITY, PENN BARRY.

REMARKS (APPLY AS SCHEDULED):

1. INTEGRATED FAN SPEED CONTROLLER INSIDE FAN FOR BALANCING.
2. FACTORY DISCONNECT SWITCH/PLUG.
3. GRAVITY BACKDRAFT DAMPER.
4. PROVIDE 0-8 HOUR INTERVAL TIMER. FAN SHALL BE ACTIVATED WHEN TIMER IS ACTIVATED.

LOUVERS

SYMBOL	MODEL / SERIES	SERVES	SIZE (WxH) (IN)	MIN FREE AREA (SF)	CFM	MAX PRESS. DROP (IN WC)	OPERATOR	INTERLOCK	FRAME	REMARKS 1	2	3	4	5	6
WL-1	ESD-635	MED GAS	18x24	1.0	---	0.05	N/A	N/A	ALUMINUM	X	X	X			
WL-2	ESD-635	MED GAS	18x24	1.0	---	0.05	N/A	N/A	ALUMINUM	X	X	X			

NOTES (APPLY TO ALL):

A. FINAL COLOR SELECTION SHALL BE MADE BY ARCHITECT AT TIME OF SHOP DRAWING APPROVAL. PROVIDE COLOR/FINISH CHARTS AS PART OF SUBMITTAL.
B. DESIGN IS BASED ON PRODUCTS BY GREENHECK. ACCEPTABLE ALTERNATES SHALL BE BY UNITED ENERTECH, ARROW, RUSKIN.

REMARKS (APPLY AS SCHEDULED):

1. BIRD SCREEN
2. BAKED ON ENAMEL FINISH.
3. GRAVITY BACKDRAFT DAMPER.

PROFICIENT ENGINEERING
6991 Peachtree Industrial Blvd Building 700
Peachtree Corners, Georgia 30092
404.330.9798
PROJECT # 123309

STROUD AND COMPANY
427 8th Street - Macon, Ga 31201
478-743-5097

ALL Architecture, LLC
2052 CHRYSLER DRIVE NE, ATLANTA, GA 30345
TELEPHONE: (404) 316-2896
E-MAIL: INFO@ALLARCHLLC.COM

REVISIONS

NO.	DATE

COPYRIGHT
THIS DRAWING AND ALL REPRODUCTIONS ARE COPYRIGHTED AND THE PROPERTY OF ALL ARCHITECTURE, LLC AND MAY NOT BE USED IN ANY WAY WITHOUT THEIR PERMISSION.

PROJECT TITLE:
HAMILTON DENTAL
222 CHAMBLESS LN.
HAMILTON, GA 31811

SEAL:
GEORGIA REGISTERED No. 034608 PROFESSIONAL ENGINEER JENNIFER DUCHAC

DRAWN: AC	CHECKED: JD
APPROVED: JD	ISSUE DATE: 07/25/23

CAD FILE NAME: CAD FILE

SHEET TITLE: **SCHEDULES**

PROJECT NUMBER: 22016

SHEET NO: M-003

SHEET OF

ISSUED FOR CONSTRUCTION

PLOT DATE: 12/11/2018 7:06:02 AM

GENERAL NOTES

A. EACH SUPPLY DIFFUSER/REGISTER RUNOUT SHALL BE PROVIDED WITH A VOLUME DAMPER. REFER TO THE DIFFUSER TAKE-OFF DETAIL FOR ADDITIONAL INFORMATION.

B. DRAWINGS ARE DIAGRAMMATIC ONLY; FINAL ROUTING OF DUCTWORK AND EQUIPMENT LOCATIONS SHALL BE DETERMINED IN THE FIELD. ADDITIONAL OFFSETS, ELBOWS, ETC. SHALL BE PROVIDED AND INSTALLED WITHOUT ADDITIONAL COST TO THE OWNER.

KEYNOTES

1. EXHAUST DUCT ROUTED TO WALL CAP WITH INSECT SCREEN. WALL CAP COLOR AND FINISH SHALL BE SELECTED BY ARCHITECT.

2. PROVIDE TWO LOUVERS. REFER TO LOUVER SCHEDULE FOR SIZES & REQUIRED ACCESSORIES. INSTALL WL-1 HIGH, APPROXIMATELY 12" BELOW CEILING. INSTALL WL-2 LOW, APPROXIMATELY 12" AFF.

PROFICIENT ENGINEERING
6991 Peachtree Industrial Blvd Building 700
Peachtree Corners, Georgia 30092
404.330.9798
PROJECT # 123309

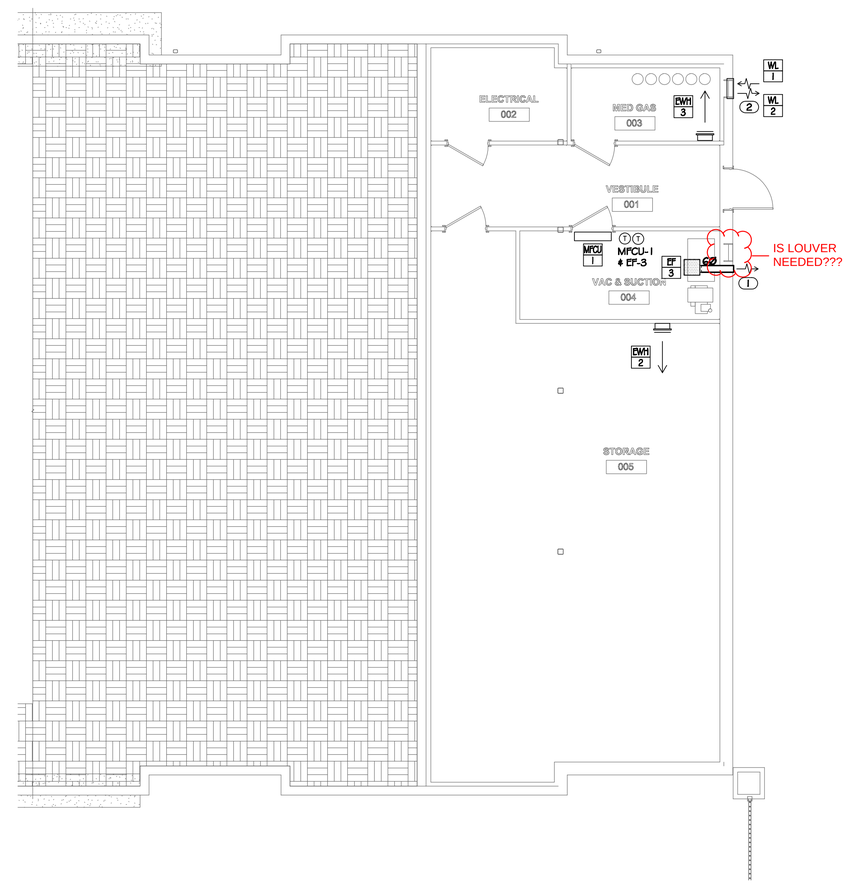

1 M-100 BASEMENT FLOOR PLAN
3/16" = 1'-0"

STROUD AND COMPANY
427 8th Street · Macon, Ga 31201
478-743-5097

ALL Architecture, LLC
2052 CHRYSLER DRIVE NE, ATLANTA, GA 30345
TELEPHONE: (404) 316-2896
E-MAIL: INFO@ALLARCHLLC.COM

REVISIONS	
NO.	DATE

COPYRIGHT
THIS DRAWING AND ALL REPRODUCTIONS ARE COPYRIGHTED AND THE PROPERTY OF ALL ARCHITECTURE, LLC AND MAY NOT BE USED IN ANY WAY WITHOUT THEIR PERMISSION.

PROJECT TITLE:
HAMILTON DENTAL
222 CHAMBLESS LN.
HAMILTON, GA 31811

SEAL:
GEORGIA REGISTERED No. 034608 PROFESSIONAL ENGINEER JENNIFER DUCHAC

DRAWN: AC	CHECKED: JD
APPROVED: JD	ISSUE DATE: 07/25/23

CAD FILE NAME: CAD FILE

SHEET TITLE:
BASEMENT FLOOR PLAN

PROJECT NUMBER: 22016

SHEET NO:
M-100
SHEET OF

ISSUED FOR CONSTRUCTION

PLOT DATE: 12/11/2018 7:06:02 AM

GENERAL NOTES

A. EACH SUPPLY DIFFUSER/REGISTER RUNOUT SHALL BE PROVIDED WITH A VOLUME DAMPER. REFER TO THE DIFFUSER TAKE-OFF DETAIL FOR ADDITIONAL INFORMATION.

B. DRAWINGS ARE DIAGRAMMATIC ONLY; FINAL ROUTING OF DUCTWORK AND EQUIPMENT LOCATIONS SHALL BE DETERMINED IN THE FIELD. ADDITIONAL OFFSETS, ELBOWS, ETC. SHALL BE PROVIDED AND INSTALLED WITHOUT ADDITIONAL COST TO THE OWNER.

C. SPACE ABOVE CEILING IS EXTREMELY LIMITED. CONTRACTOR SHALL COORDINATE DUCT ROUTING WITH ALL TRADES PRIOR TO INSTALLATION, PURCHASE, OR FABRICATION.

KEYNOTES

1. EXHAUST DUCT ROUTED TO WALL CAP WITH INSECT SCREEN. WALL CAP COLOR AND FINISH SHALL BE SELECTED BY ARCHITECT.
2. 3/4" DOOR UNDERCUT.
3. DUCT SHALL BE LOCATED AT STERILIZERS (IN STERILIZATION) AND 3-D PRINTER (IN LAB). COORDINATE EXACT LOCATION WITH OWNER AND OWNER FURNISHED EQUIPMENT. COORDINATE WITH GC AND ARCHITECT TO HAVE WALL 6" THICK TO ROUTE EXHAUST DUCT DOWN IN WALL AT STERILIZERS AND 3-D PRINTER LEVEL.

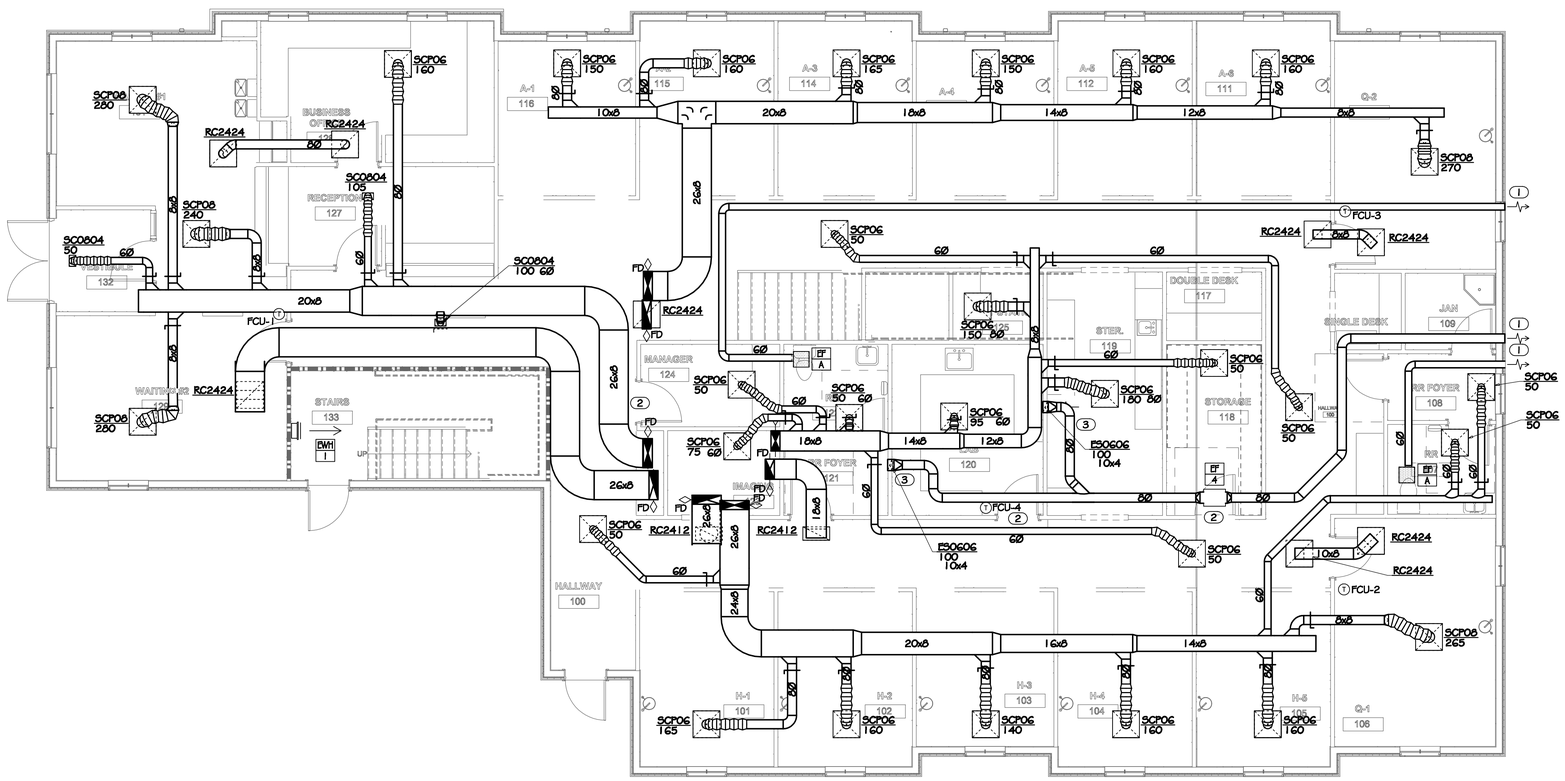

1 / M-101 1ST FLOOR PLAN
3/16" = 1'-0"

PLOT DATE: 12/11/2018 7:06:02 AM

PROFICIENT ENGINEERING
6991 Peachtree Industrial Blvd Building 700
Peachtree Corners, Georgia 30092
404.330.9798
PROJECT # 123309

STROUD AND COMPANY
427 8th Street - Macon, Ga 31201
478-743-5097

ALL Architecture, LLC
2052 CHRYSLER DRIVE NE, ATLANTA, GA 30345
TELEPHONE: (404) 316-2896
E-MAIL: INFO@ALLARCHLLC.COM

REVISIONS

NO.	DATE

COPYRIGHT
THIS DRAWING AND ALL REPRODUCTIONS ARE COPYRIGHTED AND THE PROPERTY OF ALL ARCHITECTURE, LLC AND MAY NOT BE USED IN ANY WAY WITHOUT THEIR PERMISSION.

PROJECT TITLE:

HAMILTON DENTAL

222 CHAMBLESS LN.
HAMILTON, GA 31811

SEAL:

GEORGIA REGISTERED PROFESSIONAL ENGINEER No. 034608 JENNIFER DUCHAC

DRAWN: AC	CHECKED: JD
APPROVED: JD	ISSUE DATE: 07/25/23

CAD FILE NAME: CAD FILE

SHEET TITLE:

1ST FLOOR PLAN

PROJECT NUMBER: 22016

SHEET NO:

M-101

SHEET OF

ISSUED FOR CONSTRUCTION

GENERAL NOTES

A. EACH SUPPLY DIFFUSER/REGISTER RUNOUT SHALL BE PROVIDED WITH A VOLUME DAMPER. REFER TO THE DIFFUSER TAKE-OFF DETAIL FOR ADDITIONAL INFORMATION.

B. DRAWINGS ARE DIAGRAMMATIC ONLY; FINAL ROUTING OF DUCTWORK AND EQUIPMENT LOCATIONS SHALL BE DETERMINED IN THE FIELD. ADDITIONAL OFFSETS, ELBOWS, ETC. SHALL BE PROVIDED AND INSTALLED WITHOUT ADDITIONAL COST TO THE OWNER.

KEYNOTES

1. EXHAUST DUCT ROUTED TO WALL CAP WITH INSECT SCREEN. WALL CAP COLOR AND FINISH SHALL BE SELECTED BY ARCHITECT.
2. EXHAUST DUCT ROUTED TO ROOF CAP WITH INSECT SCREEN.
3. 4"Ø LAUNDRY DRYER EXHAUST DUCTWORK ROUTED TO WALL CAP WITH INTEGRAL BACKDRAFT DAMPER. WALL CAP COLOR AND FINISH SHALL BE SELECTED BY ARCHITECT.
4. 4"Ø LAUNDRY DRYER EXHAUST DUCTWORK ROUTED TO DRYER WALL BOX. REFER TO DRYER WALL BOX AND DRYER EXHAUST DETAILS. WHERE EQUIVALENT DRYER DUCT LENGTH EXCEEDS CODE MAXIMUM 35 FT; A PERMANENT LABEL OR TAG SHALL BE INSTALLED WITHIN 6FT OF THE EXHAUST WALL BOX NOTING THE INSTALLED EQUIVALENT DUCT LENGTH. PROVIDE 6" RADIUS ELBOWS FOR ALL DUCT ELBOWS.
5. 1" DOOR UNDERCUT.

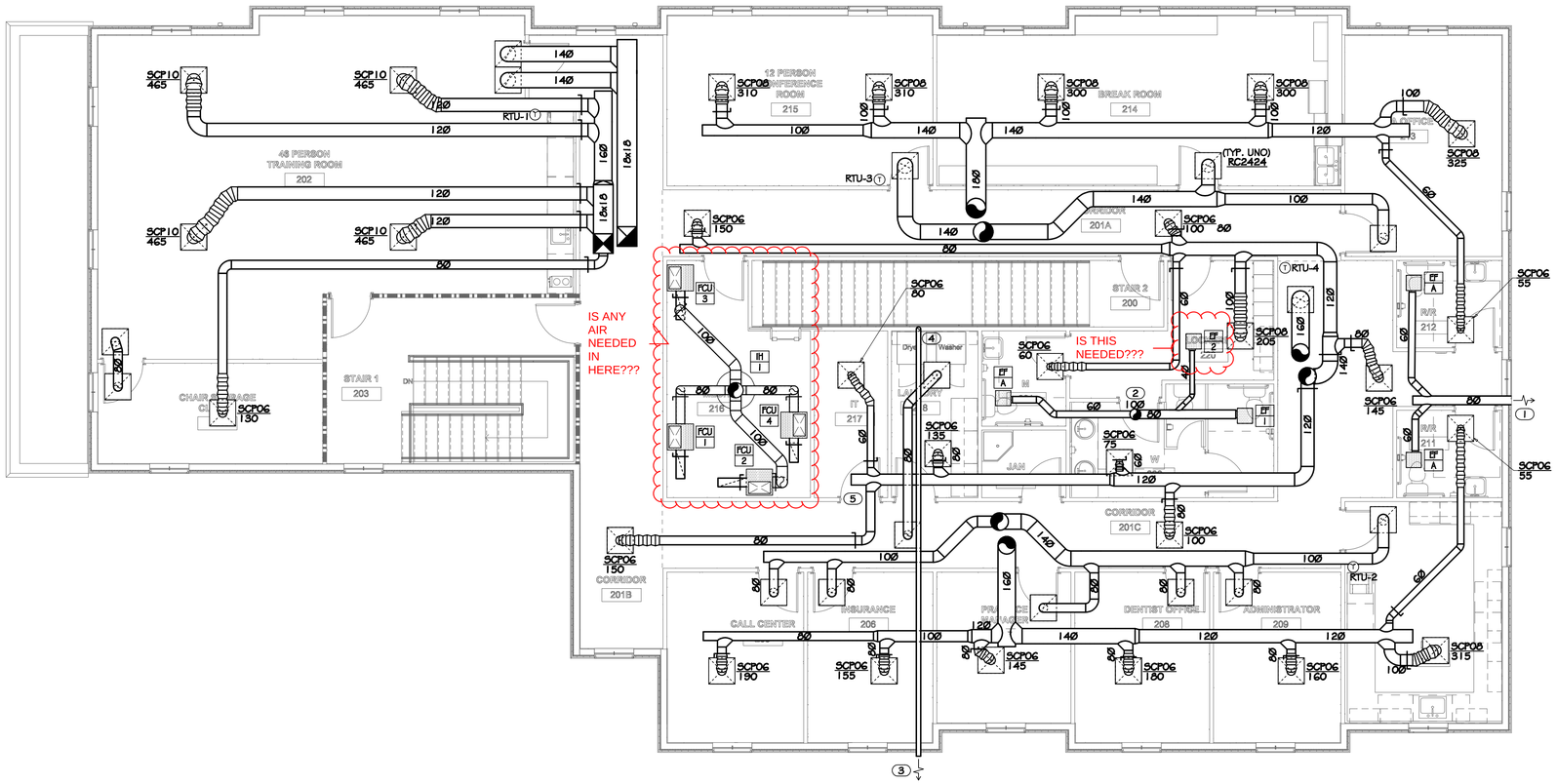

1 M-102 2ND FLOOR PLAN
3/16" = 1'-0"

PLOT DATE: 12/11/2018 7:06:02 AM

PROFICIENT ENGINEERING
6991 Peachtree Industrial Blvd Building 700
Peachtree Corners, Georgia 30092
404.330.9798
PROJECT # 123309

STROUD AND COMPANY
427 8th Street - Macon, Ga 31201
478-743-5097

ALL Architecture, LLC
2052 CHRYSLER DRIVE NE, ATLANTA, GA 30345
TELEPHONE: (404) 316-2896
E-MAIL: INFO@ALLARCHLLC.COM

REVISIONS	
NO.	DATE

COPYRIGHT
THIS DRAWING AND ALL REPRODUCTIONS ARE COPYRIGHTED AND THE PROPERTY OF ALL ARCHITECTURE, LLC AND MAY NOT BE USED IN ANY WAY WITHOUT THEIR PERMISSION.

PROJECT TITLE:
HAMILTON DENTAL
222 CHAMBLESS LN,
HAMILTON, GA 31811

SEAL:
GEORGIA REGISTERED PROFESSIONAL ENGINEER No. 034608 JENNIFER DUCHAC

DRAWN: AC	CHECKED: JD
APPROVED: JD	ISSUE DATE: 07/25/23

CAD FILE NAME: CAD FILE

SHEET TITLE:
2ND FLOOR PLAN

PROJECT NUMBER: 22016

SHEET NO:
M-102

SHEET OF

ISSUED FOR CONSTRUCTION

PROFICIENT
ENGINEERING
6991 Peachtree Industrial Blvd Building 700
Peachtree Corners, Georgia 30092
404.330.9798
PROJECT # 123309

GENERAL NOTES

A. DRAWINGS ARE DIAGRAMMATIC ONLY; FINAL EQUIPMENT LOCATIONS SHALL BE DETERMINED IN THE FIELD.

B. ALL MECHANICAL EQUIPMENT TO BE LOCATED A MINIMUM OF 10' AWAY FROM ROOF EDGE. ALL MECHANICAL EQUIPMENT LOCATED LESS THAN 10' FROM ROOF EDGE TO HAVE A MINIMUM 42" TALL PARAPET OR FALL PROTECTION.

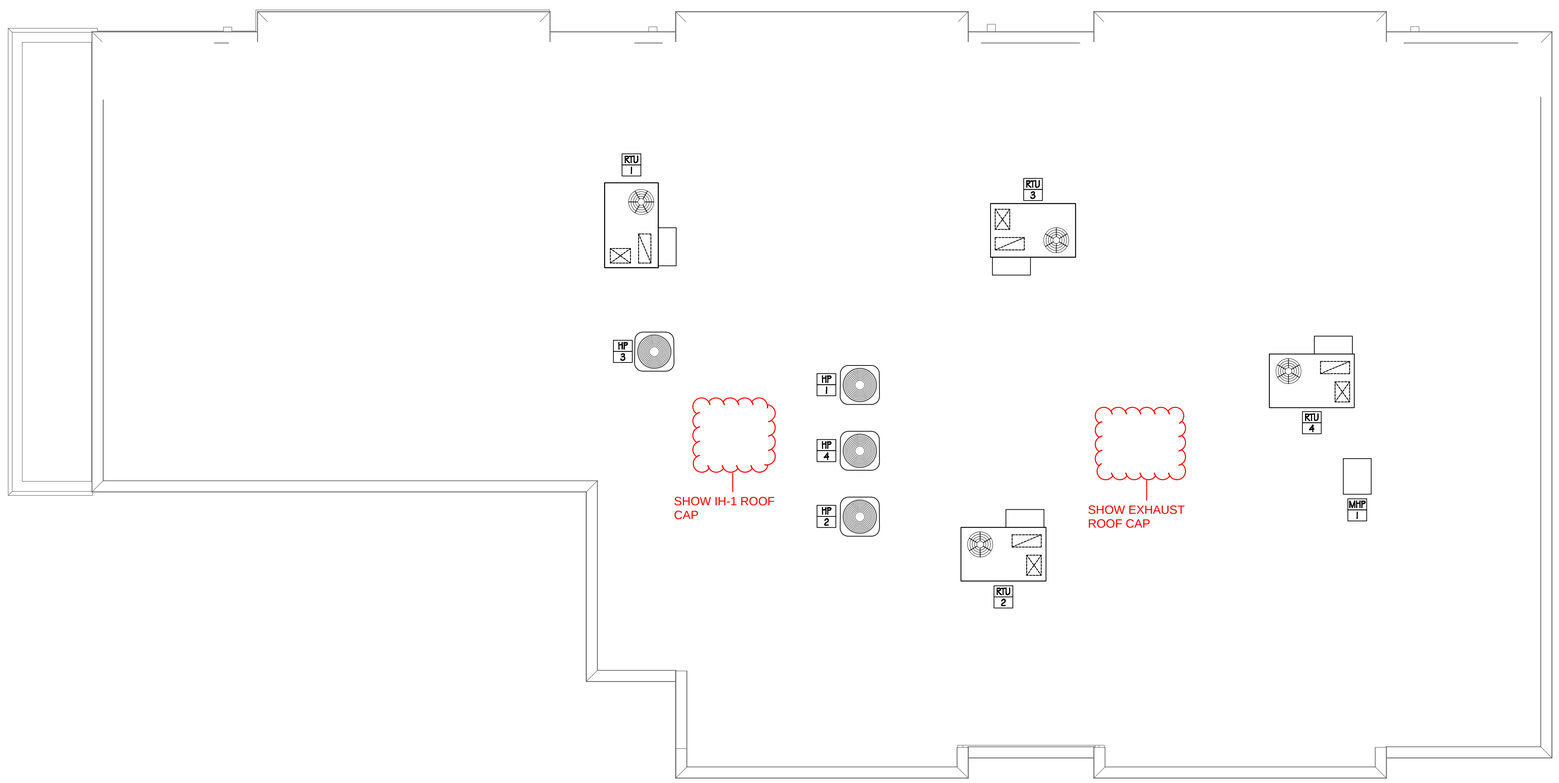

1 M-103 ROOF PLAN
3/16" = 1'-0"

STROUD AND COMPANY
427 8th Street - Macon, Ga 31201
478-743-5097

ALL Architecture, LLC
2052 CHRYSLER DRIVE NE, ATLANTA, GA 30345
TELEPHONE: (404) 316-2896
E-MAIL: INFO@ALLARCHLLC.COM

REVISIONS

NO.	DATE

COPYRIGHT
THIS DRAWING AND ALL REPRODUCTIONS ARE COPYRIGHTED AND THE PROPERTY OF ALL ARCHITECTURE, LLC AND MAY NOT BE USED IN ANY WAY WITHOUT THEIR PERMISSION.

PROJECT TITLE:
HAMILTON DENTAL
222 CHAMBLESS LN,
HAMILTON, GA 31811

SEAL:
GEORGIA REGISTERED No. 034608 PROFESSIONAL ENGINEER JENNIFER DUCHAC

DRAWN: AC	CHECKED: JD
APPROVED: JD	ISSUE DATE: 07/25/23

CAD FILE NAME: CAD FILE

SHEET TITLE:
ROOF PLAN

PROJECT NUMBER: 22016

SHEET NO:
M-103

SHEET OF

ISSUED FOR CONSTRUCTION

PLOT DATE: 12/11/2018 7:06:02 AM

ABBREVIATIONS

AAV	AIR ADMITTANCE VALVE	IMB	ICE MACHINE BOX
A/C	ABOVE CEILING	IE	INVERT ELEVATION
A/F	ABOVE FLOOR	IWH	INSTANTANEOUS WATER HEATER
AFF, AFG	ABOVE FINISHED FLOOR/GRADE	L, LAV	LAVATORY
B/F, B/G	BELOW FLOOR/GRADE	MBH	1000 BTU/HR
BFP	BACKFLOW PREVENTER	MS	MOP SINK
CD	CONDENSATE DRAIN	MV	MIXING VALVE
CONT	CONTINUATION	O/H	OVERHEAD
CW	COLD WATER	G	NATURAL GAS
DN	DOWN	PD	PUMPED DISCHARGE
ET	EXPANSION TANK	PRV	PRESSURE REDUCING VALVE
EWC	ELECTRIC WATER COOLER	RP	RECIRCULATION PUMP
ex.	EXISTING	S, SAN	SANITARY
FCO	FLOOR CLEANOUT	SH	SHOWER
FD	FLOOR DRAIN	SK	SINK
FHB	FREEZEPROOF HOSE BIBB	TP	TRAP PRIMER
FS	FLOOR SINK	TYP	TYPICAL
FRH	FREEZEPROOF ROOF HYDRANT	UR	URINAL
FWH	FREEZEPROOF WALL HYDRANT	V	VENT
GCO	GRADE CLEANOUT	VTR	VENT THROUGH ROOF
GI	GREASE INTERCEPTOR	WC	WATER CLOSET
HB	HOSE BIBB	W.C.	WATER COLUMN
HD	HUB DRAIN	WCO	WALL CLEANOUT
HW	HOT WATER	WHA	WATER HAMMER ARRESTER
HWR	HOT WATER RETURN	WMB	WASHING MACHINE BOX

LEGEND

	COLD WATER PIPE
	HOT WATER PIPE
	HOT WATER RETURN PIPE
S	SANITARY PIPE
	VENT PIPE
G	NATURAL GAS PIPE
GW	GREASE WASTE PIPE
F	FIRE SPRINKLER PIPE
ST	STORM PIPE
EST	EMERGENCY STORM PIPE
IW	INDIRECT WASTE PIPE
PD	PUMPED DISCHARGE
FW	FILTERED WATER PIPE
	PIPE UP / PIPE DOWN
	PIPE TEE FROM TOP / TEE FROM BOTTOM
	PIPE CAP / PIPE CONTINUATION
	DIRECTIONAL FLOW ARROW
	BALL VALVE / CHECK VALVE
	MIXING VALVE / PRESSURE REDUCING VALVE
	BACKFLOW PREVENTER ASSEMBLY
	WALL HYDRANT / HOSE BIBB
	FLOOR DRAIN / FLOOR SINK
	WATER HAMMER ARRESTOR
	GAS COCK / GAS SOLENOID VALVE
CC	P-TRAP
	HUB DRAIN
	TRAP PRIMER
	FLOOR CLEANOUT / GRADE CLEANOUT
	VENT THROUGH ROOF
	PIPE CLEANOUT / WALL CLEANOUT

SPECIFICATIONS

GENERAL
ALL WORK SHALL COMPLY WITH ALL STATE, CITY AND LOCAL CODES, RULES AND REGULATIONS. CONTRACTOR SHALL SECURE ALL REQUIRED PERMITS AND INSPECTIONS ASSOCIATED WITH THIS WORK, AND SHALL PAY ALL COSTS AND FEES INVOLVED.

ALL WORK SHALL BE INSTALLED IN ACCORDANCE WITH THE BEST RECOGNIZED PRACTICE IN THE FIELD CONCERNED. MANUFACTURED ITEMS SHALL BE INSTALLED IN STRICT ACCORDANCE WITH THE MANUFACTURER'S PRINTED DIRECTIONS, SPECIFICATIONS AND RECOMMENDATIONS.

CONTRACTOR SHALL REVIEW ALL CONTRACT DOCUMENTS AND SHALL BE FAMILIAR WITH THE SCOPE AND REQUIREMENTS OF THIS PROJECT. ANY DISCREPANCIES OR LACK OF CLARITY IN THE DOCUMENTS SHALL BE IDENTIFIED TO THE ARCHITECT OR ENGINEER PRIOR TO THE SUBMISSION OF PRICING BIDS. WITH A SUBMITTED BID, CONTRACTOR IS ACCEPTING THESE DOCUMENTS AS SUFFICIENT DEFINITION OF THE SCOPE OF WORK, AND ANY ADDITIONAL COSTS BASED ON UNCLARITY OF CONTRACT DOCUMENTS WILL NOT BE CONSIDERED.

CONTRACTOR SHALL VERIFY ALL DIMENSIONS AND LOCATIONS FOR EQUIPMENT INSTALLATION PRIOR TO THE SUBMITTAL OF SHOP DRAWINGS. ALL EQUIPMENT AND DEVICES SHALL BE INSTALLED SUCH THAT THEY ARE EASILY ACCESSIBLE AND SERVICABLE. THIS EQUIPMENT INCLUDES, BUT IS NOT LIMITED TO: PLUMBING FIXTURES, WATER HEATERS, EXPANSION TANKS, PUMPS, BACKFLOW PREVENTERS, VALVES, MIXING VALVES, THERMOMETERS, GAUGES, TRAP PRIMERS AND CLEANOUTS.

THE CONTRACTOR IS RESPONSIBLE FOR REVIEWING THE FULL SET OF CONSTRUCTION DOCUMENTS, INCLUDING ARCHITECTURAL, STRUCTURAL, CIVIL, MECHANICAL & ELECTRICAL DRAWINGS (AS APPLICABLE) TO ENSURE ALL PLUMBING WORK IS COORDINATED WITH PHYSICAL CONDITIONS AND ALL OTHER TRADES.

THE CONTRACTOR IS RESPONSIBLE FOR REVIEWING THE ARCHITECTURAL DRAWINGS TO ENSURE THERE IS ADEQUATE WALL THICKNESS SUCH THAT ALL PIPING, FIXTURE CARRIERS, WALL CLEANOUTS, WALL BOXES, WALL HYDRANTS AND ACCESS PANELS WILL FIT IN THE WALL SPACE. CONTRACTOR SHALL NOTIFY THE ARCHITECT IF WALL SPACE IS INADEQUATE PRIOR TO COMMENCING WORK.

THE CONTRACTOR SHALL OBTAIN EXACT WALL, FIXTURE, AND LAYOUT DIMENSIONS FROM THE ARCHITECTURAL DRAWINGS. THE CONTRACTOR IS RESPONSIBLE FOR OBTAINING ROUGH-IN AND INSTALLATION DRAWINGS FOR ALL PLUMBING FIXTURES, KITCHEN EQUIPMENT AND OWNER FURNISHED EQUIPMENT (AS APPLICABLE), AND SHALL COORDINATE THE PLUMBING INSTALLATION PRIOR TO COMMENCING THE WORK. THE CONTRACTOR IS RESPONSIBLE FOR PROVIDING AND INSTALLING ALL NECESSARY VALVES, CONNECTIONS, TRAPS, ACCESS PANELS, UNIONS, ESCUTCHEONS, WATER HAMMER ARRESTORS, VACUUM BREAKERS, RELIEF VALVES, PIPE INSULATION, AND EQUIPMENT SPECIALTY DEVICES AS REQUIRED TO FACILITATE COMPLETE AND OPERATIONAL CONDITIONS WHICH ARE IN STRICT COMPLIANCE WITH THE MANUFACTURER'S INSTALLATION INSTRUCTIONS.

THESE DRAWINGS ARE DIAGRAMMATIC AND DO NOT REFLECT ALL POSSIBLE PHYSICAL CONDITIONS. REFER TO ARCHITECTURAL DRAWINGS FOR ALL DIMENSIONS AND EXACT LOCATIONS OF EQUIPMENT AND FIXTURES. PROVIDE NECESSARY PIPING OFFSETS TO COORDINATE WITH THE BUILDING STRUCTURE, WORK OF OTHER TRADES, AND CONNECTION TO SITE UTILITIES (AS APPLICABLE).

COORDINATE THE ELECTRICAL REQUIREMENTS AND CHARACTERISTICS OF ALL PLUMBING EQUIPMENT WITH THE ELECTRICAL CONTRACTOR PRIOR TO ISSUING SUBMITTALS OR PURCHASING EQUIPMENT.

UNLESS NOTED OTHERWISE, ALL DRAINAGE PIPING SHALL BE SLOPED AT A MINIMUM OF 1/4" PER FOOT. 2" SANITARY PIPING AND ALL GREASE WASTE PIPING SHALL BE SLOPED AT 1/2" PER FOOT.

DOMESTIC WATER PIPING SHALL BE PURGED OF DELETERIOUS MATTER AND DISINFECTED PRIOR TO UTILIZATION. PIPING TO BE FLUSHED AND STERILIZED IN ACCORDANCE WITH IPC 610.1 AND ALL APPLICABLE LOCAL AND STATE HEALTH DEPARTMENT STANDARDS.

ALL DOMESTIC WATER PIPING, SANITARY P-TRAPS AND GREASE WASTE PIPING SUBJECT TO FREEZING SHALL BE INSULATED AND PROVIDED WITH HEAT TRACE. CONDENSATE PIPING SUBJECT TO FREEZING WITHIN WALK-IN FREEZERS SHALL BE INSULATED AND PROVIDED WITH HEAT TRACE. PIPING INSTALLED IN EXTERIOR WALLS SHALL BE WRAPPED IN 1" THICK PIPE INSULATION AND BE LOCATED ON THE INTERIOR SIDE OF THE BUILDING INSULATION. IF INSTALLED IN EXTERIOR BLOCK WALLS, INTERSTITIAL SPACES SHALL BE FILLED WITH FOAM INSULATION.

IN CONCEALED LOCATIONS WHERE PIPING, OTHER THAN CAST-IRON OR GALVANIZED STEEL, IS INSTALLED THROUGH HOLES OR NOTCHES IN STUDS, JOISTS, OR SIMILAR MEMBERS LESS THAN 1 1/2" FROM THE NEAREST EDGE OF MEMBER, PIPE SHALL BE PROTECTED BY STEEL SHIELD PLATES IN ACCORDANCE WITH IPC 305.6.

PIPE PENETRATIONS THROUGH FIRE RATED WALLS OR FLOORS SHALL HAVE EQUIVALENTLY RATED SLEEVES AND SHALL BE SEALED AND FIRE CAULKED WITH A U.L. LISTED FIRE STOPPING SYSTEM INSTALLED IN ACCORDANCE WITH THE MANUFACTURER'S LISTED DETAILS AND SPECIFICATIONS.

THE CONTRACTOR IS RESPONSIBLE FOR COORDINATING WITH THE REQUIREMENTS OF THE COUNTY HEALTH DEPARTMENT AND OTHER LOCAL AUTHORITIES HAVING JURISDICTION REGARDING CROSS CONNECTION CONTROL OR OBTAINING A FOOD SERVICE PERMIT (AS APPLICABLE). REPORT ANY OBSERVED DISCREPANCIES TO THE ARCHITECT OR ENGINEER PRIOR TO COMMENCING WITH THE WORK.

CONTRACTOR SHALL CONFIRM PLUMBING FIXTURE FINISHES WITH THE ARCHITECTURAL SCHEDULES & DETAILS (AS APPLICABLE).

PROFIICENT ENGINEERING WAIVES ANY AND ALL RESPONSIBILITY AND LIABILITY FOR PROBLEMS WHICH ARISE FROM FAILURE TO FOLLOW THESE PLANS, SPECIFICATIONS AND THE DESIGN INTENT THEY CONVEY, OR PROBLEMS WHICH ARISE FROM OTHER'S FAILURE TO OBTAIN AND/OR FOLLOW PROFICIENT'S GUIDANCE WITH RESPECT TO ANY ERRORS, OMISSIONS, INCONSISTENCIES, AMBIGUITIES OR CONFLICTS WHICH ARE ALLEGED. THE DRAWINGS ARE GENERALLY DIAGRAMMATIC IN NATURE.

SUBMITTALS
FURNISH SHOP DRAWINGS FOR MANUFACTURED PRODUCTS. ALL ITEMS SHALL BE CLEARLY MARKED TO MATCH EQUIPMENT MARKS ON THE PLUMBING DRAWINGS. ALL OPTIONS MUST BE CLEARLY MARKED ON THE SUBMITTAL SHEET. A MODEL NUMBER LISTING ON A COVER SHEET IS NOT AN ACCEPTABLE SUBSTITUTE FOR MARKING THE ACTUAL SUBMITTAL SHEET. ELECTRICAL DATA FOR POWERED EQUIPMENT MUST BE INDICATED ON THE SUBMITTAL SHEET FOR THAT ITEM.

SUBMITTAL REVIEW IS CONSIDERED A GENERAL ACCEPTANCE OF THE BASIC APPLICABILITY OF THE EQUIPMENT. CONTRACTOR IS RESPONSIBLE FOR THE INSTALLATION AND/OR ALTERNATE ARRANGEMENT OF THE EQUIPMENT WITHIN A GIVEN SPACE. WHEN SUBSTITUTED EQUIPMENT IS INSTALLED, CONTRACTOR SHALL BE RESPONSIBLE FOR ANY COORDINATION OR ADDITIONAL COST BROUGHT ON BY THE USE OF THIS EQUIPMENT.

HANGERS AND SUPPORTS
HANGERS SHALL BE COMPLETE WITH RODS AND SUPPORTS PROPORTIONED TO THE SIZE OF PIPE TO BE SUPPORTED, IN ACCORDANCE WITH THE MANUFACTURER'S RECOMMENDATIONS.

SIZE HANGERS FOR INSULATED PIPING TO BEAR ON OUTSIDE OF INSULATION. PROVIDE INSULATION PROTECTORS AT HANGERS BEARING ON THE OUTSIDE OF INSULATION. PROVIDE A RIGID INSERT OR RIGID INSULATION AT EACH INSULATION PROTECTOR.

WHERE SEVERAL PIPES 2 1/2" AND SMALLER RUN PARALLEL AND IN THE SAME PLANE, THEY MAY BE SUPPORTED ON GANG OR MULTIPLE HANGERS. LARGER PIPING SHALL BE INDEPENDENTLY HUNG, RUN PARALLEL AND BE EQUALLY SPACED.

PIPING SHALL BE SUPPORTED IN ACCORDANCE WITH IPC SECTION 308, AND SPACING OF HANGERS SHALL NOT EXCEED THE LIMITS SET FORTH IN TABLE 308.5. PIPES SHALL BE SUPPORTED WITHIN 1'-0" OF EACH ELBOW.

VERTICAL PIPE SUBJECT TO MOVEMENT SHALL BE SUPPORTED FROM THE WALL BY MEANS OF A PIPE CLAMP.

SUPPORT DOMESTIC WATER PIPING IN SPACES BEHIND PLUMBING FIXTURES BY BRACKETS AND U-BOLTS SECURED TO WASTE AND VENT STACKS. SIZE U-BOLTS TO BEAR ON THE PIPING.

AFTER HANGER RODS ARE INSTALLED IN FINISHED CONCRETE CEILING, FILL THE REMAINING OPENING WITH CEMENT SO THAT NO HOLE SHOWS AT THE CEILING.

WHERE COPPER PIPING IS USED, NONFERROUS METAL SUPPORT(S) OR PROPER ISOLATION BETWEEN DISSIMILAR MATERIALS SHALL BE PROVIDED.

PIPE HANGERS AND SUPPORTS SHALL BE FURNISHED AND INSTALLED IN ACCORDANCE WITH RECOMMENDATIONS SET FORTH IN MANUFACTURER'S STANDARDIZATION SOCIETY STANDARD PRACTICES NO. SP-69 AND SP-58.

SLEEVES
SLEEVES SHALL BE PROVIDED WHERE PIPES PASS THROUGH WALLS, FLOORS AND ROOFS.
PROVIDE STANDARD WEIGHT STEEL SLEEVES IN CONCRETE AND MASONRY CONSTRUCTION, PROVIDE 26GA GALVANIZED SHEET METAL SLEEVES IN INTERIOR DRYWALL CONSTRUCTION. SLEEVES SHALL BE THE FULL THICKNESS OF WALLS AND SHALL ALLOW FOR THE FULL THICKNESS OF PIPE INSULATION, WHERE APPLICABLE.

SLEEVES MAY BE OMITTED WHEN OPENINGS ARE CORE DRILLED FOR CONCEALED VERTICAL AND HORIZONTAL PIPING. SLEEVES ARE NOT REQUIRED AT INDIVIDUAL PLUMBING FIXTURES OR IN CONCRETE FLOOR SLABS ON GRADE, UNLESS OTHERWISE NOTED.

SLEEVES FOR ALL PIPING PENETRATING FIRE RATED WALLS AND FLOORS SHALL BE PROVIDED WITH 3M PIPE BARRIER NO. CP-25 FIRE PROOFING CAULKING, OR EQUAL, IN ANNULAR SPACE BETWEEN SLEEVE AND PIPING. CONTRACTOR SHALL VERIFY THE RATING OF THE WALL AND CONFIRM THE PENETRATION PROTECTION PROVIDED MEETS THAT RATING.

PENETRATIONS THROUGH OUTSIDE WALLS SHALL BE WATERTIGHT. CAULK BETWEEN PLUMBING PIPE AND SLEEVE. PACK WITH FIBERGLASS AND CAULK, 1" DEEP AT EACH FACE WITH NON-HARDENING SEALANT BETWEEN PIPE AND SLEEVE.

WASTE AND VENT PIPING SYSTEMS AND ACCESSORIES
SANITARY PIPING SHALL BE PVC SCHEDULE 40 SOLID WALL PIPE AND DWV FITTING SYSTEM.

PIPE AND FITTINGS SHALL BE MANUFACTURED FROM PVC COMPOUND WITH A CELL CLASS OF 12454 PER ASTM D-1784 AND CONFORM WITH NATIONAL SANITATION FOUNDATION (NSF) STANDARD 14. PIPE SHALL BE IRON PIPE SIZE (IPS) CONFORMING TO ASTM D-1785 AND ASTM D-2665. INJECTION MOLDED FITTINGS SHALL CONFORM TO ASTM D-2665. FABRICATED FITTINGS SHALL CONFORM TO ASTM F-1866. SOLVENT CEMENTS SHALL CONFORM TO ASTM D-2564. PRIMER SHALL CONFORM TO ASTM F-656. BURIED PIPE SHALL CONFORM TO ASTM D-2321.

WASTE AND VENT PIPING SHALL BE TESTED IN ACCORDANCE WITH THE GOVERNING CODES. AT A MINIMUM, WASTE PIPING SHALL BE TESTED WITH AT LEAST 10 FOOT OF WATER HEAD PRESSURE APPLIED.

ALL VENTS THROUGH ROOF SHALL BE LOCATED AT LEAST 10'-0" AWAY FROM ANY AIR INTAKE, EVAPORATIVE COOLER, OR ANY OTHER DEVICE THAT WOULD DRAW AIR FROM THE VENT. FLASH AROUND ALL PIPES PENETRATING THROUGH ROOF WITH STANDARD MANUFACTURED FLASHINGS. FLASHING SHALL BE SHEET METAL WITH RUBBER GASKETS AND SHALL EXTEND INTO ROOFING AND UP PIPE DISTANCES IN ACCORDANCE WITH THE LOCAL CODE.

NO DOUBLE COMBINATION FITTINGS MAY BE UTILIZED IN THE HORIZONTAL.

WHERE TWO HORIZONTAL PIPES (BACK-TO-BACK WATER CLOSETS OR TWO SANITARY BRANCHES) COMBINE IN THE VERTICAL, A DOUBLE COMBINATION WYE EIGHTH BEND FITTING SHALL BE INSTALLED. DOUBLE SANITARY TEE OR SANITARY CROSS IS NOT ACCEPTABLE.

WHERE DRAWINGS REQUIRE CONNECTION TO EXISTING SANITARY SEWER PIPING IN BUILDING, IT IS THE CONTRACTOR'S RESPONSIBILITY TO FIELD DETERMINE EXACT LOCATION, DEPTH AND DIRECTION OF FLOW PRIOR TO COMMENCING WORK. CONTRACTOR SHALL ALERT ARCHITECT/ENGINEER IF THERE IS A POTENTIAL ISSUE MAINTAINING PROPER SLOPE IN CONNECTING TO EXISTING, OR IF THERE IS A MORE DIRECT CONNECTION POSSIBLE. CONTRACTOR SHALL CONFIRM THAT ANY EXISTING PIPING TO BE REUSED IS CLEAN, FREE OF DEFECTS, ADEQUATELY SLOPED 1/4"/FT MINIMUM) AND THAT THERE ARE NO DIPS THAT COULD HOLD WATER. PROVIDE CAMERA SCOPING TO DOCUMENT THIS INFORMATION. CONTRACTOR SHALL ALERT ARCHITECT/ENGINEER OF ANY DEFICIENCIES.

PROFICIENT ENGINEERING
6991 Peachtree Industrial Blvd Building 700
Peachtree Corners, Georgia 30092
404.330.9798
PROJECT # 123309

SPECIFICATIONS

STORM PIPING SYSTEMS AND ACCESSORIES
PRIMARY & EMERGENCY STORM PIPING SHALL BE PVC SCHEDULE 40 SOLID WALL PIPE AND DWV FITTING SYSTEM.

PIPE AND FITTINGS SHALL BE MANUFACTURED FROM PVC COMPOUND WITH A CELL CLASS OF 12454 PER ASTM D-1784 AND CONFORM WITH NATIONAL SANITATION FOUNDATION (NSF) STANDARD 14. PIPE SHALL BE IRON PIPE SIZE (IPS) CONFORMING TO ASTM D-1785 AND ASTM D-2665. INJECTION MOLDED FITTINGS SHALL CONFORM TO ASTM D-2665. FABRICATED FITTINGS SHALL CONFORM TO ASTM F-1866. SOLVENT CEMENTS SHALL CONFORM TO ASTM D-2564. PRIMER SHALL CONFORM TO ASTM F-656. BURIED PIPE SHALL CONFORM TO ASTM D-2321.

JOINTS FOR HUBLESS CAST IRON SOIL PIPES AND FITTINGS SHALL CONFORM TO THE MANUFACTURER'S INSTALLATION INSTRUCTIONS, THE CISPI STANDARD 310 (LATEST EDITION) AND BE CERTIFIED BY NSF FOR COMPLIANCE TO CISPI 310 OR RECEIVE PRIOR APPROVAL OF THE ENGINEER. HUBLESS COUPLING GASKETS SHALL CONFORM TO ASTM STANDARD C564. NO-HUB COUPLINGS SHALL BE HEAVY DUTY TYPE BY MISSION, HUSKY, OR APPROVED EQUAL.

INSULATE ALL HORIZONTAL STORM PIPING RUN AT ROOF LEVEL OR ABOVE CEILINGS, BOTH PRIMARY AND SECONDARY, REGARDLESS OF MATERIAL, WITH MINIMUM 1" THICK INSULATION. INSULATE ROOF RAIN BODIES AND VERTICAL DROPS FROM ROOF DRAIN TO HORIZONTAL PIPING.

EMERGENCY ROOF DRAINS SHALL BE PROVIDED WITH A 2" HIGH INLET EXTENSION OR WATER DAM. ADDITIONAL ELEVATION DIFFERENCE BETWEEN THE PRIMARY AND EMERGENCY INLETS DUE TO THE EMERGENCY ROOF DRAIN BEING LOCATED UP THE SLOPE OF THE ROOF IS ACCEPTABLE, AS LONG AS THE ELEVATION DIFFERENCE BETWEEN THE TWO INLETS DOES NOT EXCEED 2.5".

STORM PIPING SHALL BE TESTED IN ACCORDANCE WITH THE GOVERNING CODES. AT A MINIMUM, WASTE PIPING SHALL BE TESTED WITH AT LEAST 10 FOOT OF WATER HEAD PRESSURE APPLIED.

DOMESTIC WATER SYSTEMS AND ACCESSORIES
WATER PIPING ABOVE SLAB: TYPE 'L' HARD DRAWN COPPER TUBING, ASTM B88, WROUGHT SOLDER JOINTS, ANSI B16.22.

WATER PIPING BELOW SLAB: TYPE 'K' SOFT DRAWN COPPER TUBING, WITH NO JOINTS BELOW SLAB, ASTM B88.

ALL DOMESTIC HOT WATER PIPING SHALL HAVE A MINIMUM PRESSURE RATING OF 100PSI AT 180°F.

DOMESTIC WATER PIPING SHALL BE TESTED IN ACCORDANCE WITH ALL GOVERNING CODES. PIPING SHALL BE PURGED OF DELETERIOUS MATTER AND DISINFECTED PRIOR TO UTILIZATION. PIPING TO BE FLUSHED AND STERILIZED IN ACCORDANCE WITH IPC 610.1 AND ALL APPLICABLE LOCAL AND STATE HEALTH DEPARTMENT STANDARDS.

BALL VALVES SHALL BE TWO-PIECE BRONZE BODY, LARGE PORT WITH SOLID, SMOOTH BORE CHROME PLATED BRASS BALL. SEATS SHALL BE REINFORCED TFE WITH TEFLON PACKING RING AND THREADED ADJUSTABLE PACKING NUT. PROVIDE STEM EXTENSION AS NEEDED TO PROVIDE HANDLE ON OUTSIDE OF PIPE INSULATION. VALVES SHALL BE APOLLO 70 OR EQUAL.

BACKFLOW PREVENTERS SHALL BE INSTALLED IN ACCESSIBLE LOCATIONS FOR EASE OF TESTING AND SERVICING. FOR BACKFLOW PREVENTERS WITH VENT CONNECTIONS, ROUTE VENT LINE TO NEAREST DRAIN AND DISCHARGE WITH AIR GAP. BACKFLOW PREVENTERS SHALL BE TESTED IN ACCORDANCE WITH IPC 312.10.2. CONTRACTOR SHALL PROVIDE CERTIFICATIONS THAT STATE DEVICES HAVE BEEN TESTED AND APPROVED.

THERMOMETERS SHALL BE 9" ADJUSTABLE ANGLE, 30°-180°F RANGE (TRERICE BX9 OR EQUAL). PRESSURE GAUGES SHALL BE 4 1/2" DIAL SIZE, 0-160PSI (TRERICE 600CB OR EQUAL).

CONTRACTOR SHALL FIELD VERIFY INCOMING DOMESTIC WATER PRESSURE TO CONFIRM ADEQUATE PRESSURE TO SERVE THE DOMESTIC WATER SYSTEM. CONTRACTOR SHALL ALERT ENGINEER TO A POTENTIAL LOW PRESSURE CONDITION. WHERE PRESSURE EXCEEDS 80PSI, PROVIDE PRESSURE REGULATING VALVE (WATTS LF223) AND UPSTREAM STRAINER (WATTS LSF777).

CONTRACTOR SHALL FIELD COORDINATE LOCATION OF ACCESSIBLE ISOLATION VALVES ON DOMESTIC HOT & COLD WATER SUPPLIES TO FIXTURES OR GROUPS OF FIXTURES SUCH THAT THEY MAY BE SHUT OFF FOR SERVICING. SERVICE AND HOSE BIBB VALVES SHALL BE IDENTIFIED. ALL OTHER VALVES INSTALLED IN LOCATIONS THAT ARE NOT ADJACENT TO THE FIXTURE(S) SHALL BE IDENTIFIED, INDICATING THE FIXTURE(S) SERVED.

RETURN AIR PLENUMS
ALL EXPOSED MATERIALS WITHIN RETURN AIR PLENUMS SHALL BE NONCOMBUSTIBLE OR HAVE A FLAME SPREAD INDEX OF NOT MORE THAN 25 AND A SMOKE-DEVELOPED INDEX OF NOT MORE THAN 50, AS DETERMINED IN ACCORDANCE WITH ASTM E84/UL723. COPPER AND CAST IRON PIPING IS APPROVED. THE CONTRACTOR IS RESPONSIBLE FOR COORDINATING ALL RETURN AIR PLENUM LOCATIONS WITH THE MECHANICAL CONTRACTOR.

INSULATION
INSULATE ALL DOMESTIC HOT WATER AND HOT WATER RECIRCULATION PIPING IN ACCORDANCE WITH IECC TABLE C403.2.10. PIPE UP TO 1 1/2": 1" THICK INSULATION. PIPE 1 1/2" OR LARGER: 1 1/2" THICK INSULATION

INSULATE ALL HORIZONTAL COLD WATER PIPING LOCATED ABOVE CEILING, VERTICAL PIPING LOCATED IN AN EXTERIOR WALL, EXPOSED PIPING (I.E. MECH ROOMS). PIPE UP TO 1": 1 1/2" THICK. PIPING 1 1/2" AND OVER: 1" THICK INSULATION. ALL WATER AND DRAINAGE PIPING INSTALLED IN EXTERIOR WALLS SHALL BE WRAPPED IN 1" THICK PIPE INSULATION AND BE LOCATED ON THE INTERIOR SIDE OF THE BUILDING INSULATION. IF INSTALLED IN EXTERIOR BLOCK WALLS, INTERSTITIAL SPACES SHALL BE FILLED WITH FOAM INSULATION.

ALL JOINTS SHALL BE SEALED WITH MATCHING VAPOR BARRIER TAPE.

INSULATION SHALL HAVE A K-FACTOR (AVERAGE THERMAL CONDUCTIVITY) NOT TO EXCEED 0.27 BTU-IN/HR x SQFT x °F.

PROTECTION OF PIPING
PIPING PASSING UNDER FOOTINGS OR THROUGH FOUNDATION WALLS SHALL BE PROVIDED WITH A SLEEVE TWICE THE DIAMETER OF THE PIPE. OPEN ENDS OF SLEEVES SHALL BE SEALED. PIPING PASSING THROUGH CONCRETE OR CINDER WALLS AND FLOORS OR OTHER CORROSIVE MATERIAL SHALL BE PROTECTED IN ACCORDANCE WITH IPC 305.1. ALL PIPING INSTALLED THROUGH HOLES OR NOTCHES IN STUDS, JOISTS, RAFTERS OR SIMILAR MEMBERS SHALL BE PROTECTED BY STEEL SHIELD PLATES IN ACCORDANCE WITH IPC 305.6. VERTICAL STACKS IN WOOD CONSTRUCTION SHALL BE PROTECTED FROM BUILDING SETTLING WITH COMPRESSION/EXPANSION FITTINGS AND PIPE CLAMPS INSTALLED PER MANUFACTURER'S RECOMMENDATIONS (FERNCO XJ SERIES OR EQUAL).

TANK TYPE WATER HEATERS
WATER HEATERS SHALL BE U.L. LISTED AND SHALL MEET OR EXCEED THE STANDBY LOSS REQUIREMENTS OF U.S. DEPT. OF ENERGY AND CURRENT EDITION OF ASHRAE/IESNA 90.1.

WATER HEATERS SHALL HAVE 150PSI WORKING PRESSURE AND BE EQUIPPED WITH EXTRUDED HIGH DENSITY ANODE ROD AND HIGH TEMPERATURE CUTOFF SWITCH. WATER HEATERS SHALL BE THERMOSTATICALLY CONTROLLED AND SET TO 120° UNLESS OTHERWISE NOTED. WATER HEATERS SHALL BE INSTALLED ON SUSPENDED PLATFORM, STEEL STAND OR CONCRETE PAD, AS INDICATED ON DRAWINGS.

WATER HEATERS SHALL HAVE A MINIMUM 3 YEAR LIMITED WARRANTY.

WATER HEATERS SHALL BE INSTALLED LEVEL AND PLUMB. FIELD COORDINATE EXACT WATER HEATER LOCATION. MAINTAIN MANUFACTURER'S RECOMMENDED CLEARANCES, AND INSTALL SUCH THAT CONTROLS AND DEVICES ARE ACCESSIBLE FOR SERVICING.

INSTALL SHUTOFF VALVES IN COLD WATER INLET AND HOT WATER OUTLET. INSTALL THERMOMETER ON HOT WATER OUTLET. WATER HEATER SHALL HAVE ASME RATED COMBINATION TEMPERATURE AND PRESSURE RELIEF VALVE IN TOP PORTION OF TANK (FACTORY OR FIELD INSTALLED). PIPE RELIEF VALVE OUTLET TO FLOOR DRAIN, MOP SINK, INDIRECT WASTE RECEPTOR OR TO EXTERIOR. MAINTAIN CONTINUOUS DOWNWARD PITCH TOWARD DISCHARGE LOCATION, AND PROVIDE AIR GAP AT DISCHARGE LOCATION. WHERE WATER HEATER DRAIN PAN IS INDICATED ON PLANS, ROUTE DRAIN TO SAME LOCATION AS RELIEF VALVE AND DISCHARGE WITH AIR GAP.

STROUD AND COMPANY
427 8th Street · Macon, Ga 31201
478-743-5097

ALL Architecture, LLC
2052 CHRYSLER DRIVE NE, ATLANTA, GA 30345
TELEPHONE: (404) 316-2896
E-MAIL: INFO@ALLARCHLLC.COM

REVISIONS

NO.	DATE

COPYRIGHT
THIS DRAWING AND ALL REPRODUCTIONS ARE COPYRIGHTED AND THE PROPERTY OF ALL ARCHITECTURE, LLC AND MAY NOT BE USED IN ANY WAY WITHOUT THEIR PERMISSION.

PROJECT TITLE:
HAMILTON DENTAL
222 CHAMBLESS LN.
HAMILTON, GA 31811

SEAL:
GEORGIA REGISTERED No. A39948 PROFESSIONAL ENGINEER MIKE ROEDER

DRAWN: JR	CHECKED: MR
APPROVED: MR	ISSUE DATE: 07/25/23

CAD FILE NAME: CAD FILE

SHEET TITLE: **GENERAL**

PROJECT NUMBER: 22016

SHEET NO: P-001

SHEET 1 OF 10

ISSUED FOR CONSTRUCTION

PLOT DATE: 12/11/2018 7:06:02 AM

HOT WATER RECIRCULATION PUMP

NO SCALE

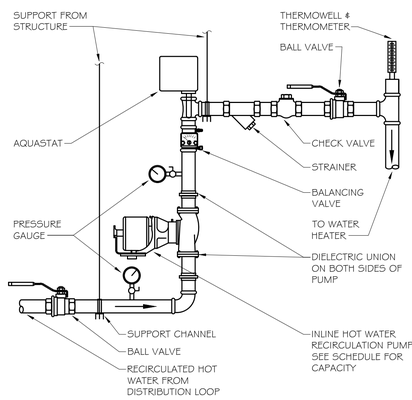

ELECTRIC WATER HEATER WITH RECIRC

NO SCALE

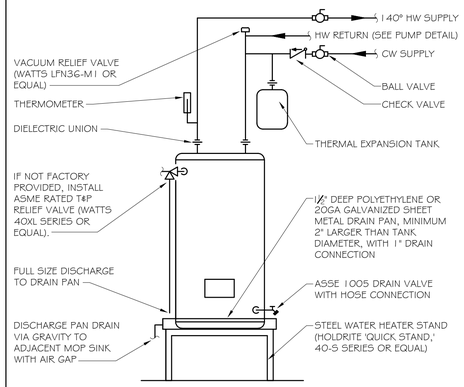

WASHING MACHINE BOX

NO SCALE

NOTE:
PRIOR TO PURCHASE, ENSURE THAT SELECTED AUTOMATIC CLOTHES WASHER IS PROVIDED WITH AIR GAP INTEGRAL TO THE MACHINE TO PROTECT WATER SUPPLY AGAINST BACKFLOW. AIR GAPS SHALL COMPLY WITH ASME A112.2 OR A112.1.3.

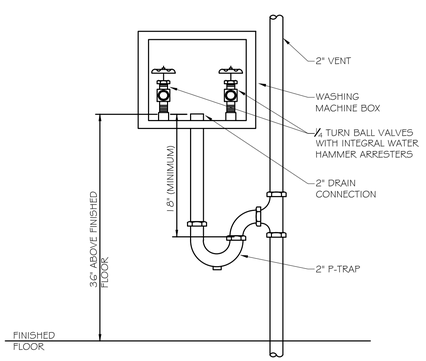

DOMESTIC WATER SERVICE ENTRANCE

NO SCALE

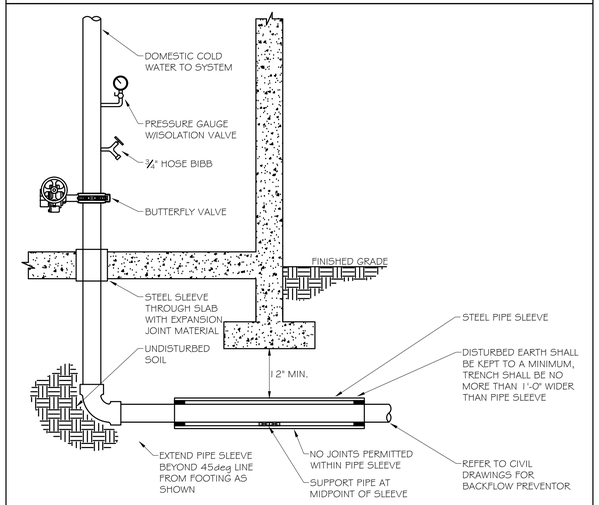

PLUMBING FIXTURE SCHEDULE

MARK	DESCRIPTION	WASTE RUNOUT	WASTE CONN.	VENT	WATER RUNOUT		WATER CONN.		SPECIFICATION
					CW	HW	CW	HW	
L-1	LAVATORY (ADA) - UNDERMOUNT	2"	1 1/2"	2"	1/2"	1/2"	3/8"	3/8"	UNDERMOUNT LAVATORY (AMERICAN STANDARD "OVALYN," 0496.221) AND 0.5GPM SINGLE HANDLE FAUCET WITH POLISHED CHROME FINISH (ZURN Z81000-XL-3M). HANDICAP DRAIN OFFSET W/GRID DRAIN (ZURN 8746-PC) AND CHROME PLATED P-TRAP (ZURN Z8701-PC). CHROME PLATED BRASS ANGLE SUPPLY STOPS WITH 12" LONG X 3/8" FLEX SUPPLIES (MCGUIRE 1165). WHERE NOT CONCEALED BY COUNTER SHROUD, INSULATE OFFSET, TRAP AND SUPPLY LINES (TRUEBRO "LAVGUARD," #103 E-Z). PROVIDE THERMOSTATIC MIXING VALVE TO TEMPER HOT WATER TO 110 DEGREES (LEONARD 170-LF). LEAD FREE, ASSE 1070.
WC-1	WATER CLOSET - TANK TYPE	4"	3"	2"	1/2"	---	1/2"	---	FLOOR MOUNTED, TANK TYPE WATER CLOSET (AMERICAN STANDARD "CADET PRO," 2150A.104), 1.28 GPF, WHITE VITREOUS CHINA, GRAVITY FED FLUSH ACTION. TOP OF RIM AT 15" AFF. HIGH EFFICIENCY 'WATERSENSE' LISTED. PROVIDE HEAVY DUTY OPEN FRONT SEAT, LESS COVER, WITH SELF-SUSTAINING CHECK HINGE (BEMIS 1055SSC). CHROME PLATED BRASS ANGLE SUPPLY STOP WITH 12" LONG X 3/8" FLEX SUPPLY (MCGUIRE M166).
WC-2	WATER CLOSET (ADA) - TANK TYPE	4"	3"	2"	1/2"	---	1/2"	---	FLOOR MOUNTED, ADA TANK TYPE WATER CLOSET (AMERICAN STANDARD "CADET PRO RIGHT HEIGHT," 2150A.104), 1.28 GPF, WHITE VITREOUS CHINA, GRAVITY FED FLUSH ACTION. TOP OF RIM AT 16.5" AFF. HIGH EFFICIENCY 'WATERSENSE' LISTED. PROVIDE ALTERNATE TANK CONFIGURATION (2150A.105) WITH TRIP LEVER ON RIGHT HAND SIDE IF NECESSARY TO HAVE LEVER ON OPEN SIDE OF WATER CLOSET. HEAVY DUTY OPEN FRONT SEAT, LESS COVER, WITH SELF-SUSTAINING CHECK HINGE (BEMIS 1055SSC). CHROME PLATED BRASS ANGLE SUPPLY STOP WITH 12" LONG X 3/8" FLEX SUPPLY (MCGUIRE M166).
EWC-1	WATER COOLER (ADA) - BI-LEVEL	2"	1 1/2"	2"	1/2"	---	1/2"	---	BI-LEVEL WATER COOLER (ELKAY EZSTL8LC). ORIFICES AT 38 3/8" AND 32 7/8" AFF. 8.0 GPH OF 50DEG WATER @ 80DEG INLET TEMP. PROVIDE ACCESSORY APRON (LKAPREZL) IF INSTALLED ON AN EXPOSED WALL FOR CANE DETECTION. MOUNT WITH WALL CARRIER (ZURN 1225-BL).
SK-1	STAINLESS STEEL SINK, UNDERMOUNT, SINGLE BOWL (ADA)	2"	1 1/2"	2"	1/2"	1/2"	3/8"	3/8"	STAINLESS STEEL SINGLE BOWL UNDERMOUNT SINK (ELKAY ELUHAD211555PD). BOWL DIMENSIONS: 23.5" L, 18.25" W, 5.5" D. ADA COMPLIANT 1.5 GPM FAUCET WITH PULL-OUT SPRAY (ELKAY LK5000), SINGLE HOLE MOUNTING. MCGUIRE CHROME PLATED P-TRAP W/C.O., CHROME PLATED BRASS ANGLE SUPPLY STOPS, 12" LONG X 3/8" FLEX SUPPLIES. PROVIDE 3/4 HP GARBAGE DISPOSAL (INSINKERATOR 'EVOLUTION COMPACT' OR EQUAL)
SK-2	STAINLESS SINK, DROP-IN, DOUBLE-BOWL (ADA)	2"	1 1/2"	2"	1/2"	1/2"	3/8"	3/8"	STAINLESS STEEL DOUBLE BOWL DROP-IN SINK (ELKAY LRAD3322), 1 HOLE. SINK DIMENSIONS: 33" x 22". BOWL DIMENSIONS: 13.5" L, 16" W, 6.125" D. ADA COMPLIANT 1.5 GPM FAUCET WITH PULL-OUT SPRAY (ELKAY LK5000), SINGLE HOLE MOUNTING (LESS ESCHUTCHEON PLATE). MCGUIRE CHROME PLATED P-TRAP W/C.O., CHROME PLATED BRASS ANGLE SUPPLY STOPS, 12" LONG X 3/8" FLEX SUPPLIES. PROVIDE BASKET STRAINERS (ZURN Z8741-S6).
MS-1	MOP SINK	3"	3"	2"	1/2"	1/2"	1/2"	1/2"	24"X24" FLOOR BASIN (FIAT MSB-2424) AND SERVICE FAUCET WITH VACUUM BREAKER, INTEGRAL STOPS, PAIL HOOK AND 3/4" HOSE THREAD ON SPOUT (830-AA). PROVIDE HOSE AND BRACKET (832-AA), MOP HANGER (869-CC), STAINLESS STEEL BUMPERGUARD (E-88-AA) AND STAINLESS STEEL WALL GUARD (MSG2424).
FD-1	FLOOR DRAIN - GENERAL PURPOSE	3"	3"	2"	---	---	---	---	GENERAL PURPOSE FLOOR DRAIN (J.R. SMITH #2005) WITH FLASHING COLLAR, ADJUSTABLE STRAINER HEAD & 5" ROUND NICKEL BRONZE STRAINER. PROVIDE SQUARE STRAINER FOR TILE APPLICATIONS. PROVIDE ASSE 1072 TRAP SEALER (ZURN Z1072).
FCO	FLOOR CLEANOUT	see plan	see plan	---	---	---	---	---	FLOOR CLEANOUT WITH CAST IRON BODY AND ADJUSTABLE NICKEL BRONZE TOP (J.R. SMITH 4031). CLEANOUT SIZE SHALL MATCH LINE SIZE.
GCO	EXTERIOR GRADE CLEANOUT	see plan	see plan	---	---	---	---	---	HEAVY DUTY CLEANOUT FOR EXTERIOR APPLICATION (J.R. SMITH 4261). CAST IRON BODY WITH DOUBLE FLANGED HOUSING AND CAST IRON TOP.
AAV-1	AIR ADMITTANCE VALVE	---	---	see plan	---	---	---	---	STUDOR 'MINI VENT', MODEL 20301 OR 'MAXI VENT', MODEL 20302, IN ACCORDANCE WITH SIZE ON PLANS. INSTALL AT LEAST 4" ABOVE THE HORIZONTAL BRANCH DRAIN.
BFP-1	BACKFLOW PREVENTER (BEVERAGE EQUIPMENT)	---	---	---	1/2"	---	3/8"	---	BACKFLOW PREVENTER WITH DUAL CHECK VALVES, ATMOSPHERIC VENT AND INTEGRAL STRAINER, LEAD FREE. FOR 3/8" EQUIPMENT CONNECTIONS, PROVIDE WATTS 50-3 (ASSE 1022). FOR 1/2" OR GREATER CONNECTION, PROVIDE WATTS LF009-QT (ASSE 1013).
MV-1	MIXING VALVE (POINT OF USE)	---	---	---	1/2"	1/2"	3/8"	3/8"	POINT-OF-USE THERMOSTATIC MIXING VALVE (LEONARD #170-LF) WITH INTEGRAL INLET CHECK VALVES, TEMPERATURE ADJUSTMENT KNOB WITH LOCK SCREW, LEAD FREE. ASSE STANDARD 1070. MINIMUM FLOW 0.25 GPM, 5 PSI DROP @ 1.7 GPM.
ET-1	POTABLE WATER EXPANSION TANK	---	---	---	3/4"	---	3/4"	---	LEAD-FREE POTABLE WATER EXPANSION TANK (WATTS PLT-5). 2.1 GALLONS TOTAL VOLUME, 0.8 GALLONS MAXIMUM ACCEPTANCE VOLUME. TANK SHALL BE PRE-CHARGED TO THE SYSTEM PRESSURE PRIOR TO INSTALLATION (CONTRACTOR TO FIELD-VERIFY).
FHB-1	FREEZEPROOF HOSE BIBB	---	---	---	3/4"	---	3/4"	---	WOODFORD MODEL 25 FREEZELESS HOSE BIBB WITH 3/4" HOSE CONNECTION AND WHEEL HANDLE. WITH INTEGRAL, AUTOMATIC DRAINING, ASSE 1011 ANTI-SIPHON VACUUM BREAKER.
IMB-1	ICE MAKER/REFRIGERATOR BOX	---	---	---	1/2"	---	1/2"	---	ICE MAKER CONNECTION BOX (OATEY #385xx/386xx SERIES), 6"X6", LOW LEAD, 1/4 TURN BRASS VALVE WITH INTEGRAL FACTORY INSTALLED WATER HAMMER ARRESTOR. WHERE BOX IS TO BE INSTALLED IN FIRE RATED WALL, PROVIDE OATEY 391xx SERIES. PROVIDE BACKFLOW PREVENTER IN SUPPLY LINE (WATTS 'SD3,' ASSE 1022).
WMB-1	WASHING MACHINE BOX	2"	2"	2"	1/2"	1/2"	1/2"	1/2"	WASHING MACHINE CONNECTION BOX (OATEY 3874x SERIES), 1/4 TURN BRASS BALL VALVES WITH INTEGRAL FACTORY INSTALLED WATER HAMMER ARRESTORS. WHERE BOX IS TO BE INSTALLED IN FIRE RATED WALL, PROVIDE OATEY 3847X SERIES. INTERCEPT DRAINAGE HOSE FROM WASHING MACHINE AND INSTALL INLINE WALL MOUNTED CANISTER STYLE LINT TRAP WITH REMOVABLE FILTER (FILTROL 160, OR EQUAL). LINT TRAP DRAINS TO WALL BOX.
PRIOR TO SUBMITTAL OR PURCHASE, THE PLUMBING CONTRACTOR SHALL VERIFY FIXTURE SPECIFICATIONS WITH ARCHITECT/OWNER									

ELECTRIC WATER HEATER SCHEDULE

MARK	TANK CAPACITY	RECOVERY	SETPOINT	ELECTRICAL	BASIS	TYPE
WH-1	50 GAL	61 GPH @ 80° RISE	120°	12.0 KW	A.O. SMITH DEN-52	TALL
PRIOR TO SUBMITTAL OR PURCHASE, THE PLUMBING CONTRACTOR SHALL VERIFY THE APPROPRIATE ELECTRICAL CHARACTERISTICS OF THE SELECTED WATER HEATER. COORDINATE DIRECTLY WITH THE ELECTRICAL CONTRACTOR AND THE POWER PANEL SCHEDULES ON THE ELECTRICAL DRAWINGS.						

RECIRCULATION PUMP SCHEDULE

MARK	ELECTRICAL	CAPACITY	NOTES	BASIS
RP-1	120v	4.0 GPM @ 10' HEAD	PROVIDE 24-HOUR TIMER. PROVIDE ADJUSTABLE AQUASTAT (HONEYWELL L6006 OR EQUAL).	ARMSTRONG ASTRO SERIES
PRIOR TO SUBMITTAL OR PURCHASE, THE PLUMBING CONTRACTOR SHALL VERIFY THE APPROPRIATE ELECTRICAL CHARACTERISTICS OF THE SELECTED PUMP. COORDINATE DIRECTLY WITH THE ELECTRICAL CONTRACTOR AND THE POWER PANEL SCHEDULES ON THE ELECTRICAL DRAWINGS.				
CONTRACTOR SHALL INSTALL BALANCING VALVE AND SHALL ADJUST AS NEEDED TO ENSURE PUMP FLOW DOES NOT EXCEED 5 GPM				

PROFICIENT ENGINEERING
6991 Peachtree Industrial Blvd Building 700
Peachtree Corners, Georgia 30092
404.330.9798
PROJECT # 123309

STROUD AND COMPANY
427 8th Street : Macon, Ga 31201
478-743-5097

ALL Architecture, LLC
2052 CHRYSLER DRIVE NE, ATLANTA, GA 30345
TELEPHONE: (404) 316-2896
E-MAIL: INFO@ALLARCHLLC.COM

REVISIONS	
NO.	DATE

COPYRIGHT
THIS DRAWING AND ALL REPRODUCTIONS ARE COPYRIGHTED AND THE PROPERTY OF ALL ARCHITECTURE, LLC AND MAY NOT BE USED IN ANY WAY WITHOUT THEIR PERMISSION.

PROJECT TITLE:
HAMILTON DENTAL
222 CHAMBLESS LN,
HAMILTON, GA 31811

SEAL:
GEORGIA REGISTERED No. 039068 PROFESSIONAL ENGINEER MIKE ROEDER

DRAWN: JR	CHECKED: MR
APPROVED: MR	ISSUE DATE: 07/25/23

CAD FILE NAME: CAD FILE

SHEET TITLE:
SCHEDULES & DETAILS

PROJECT NUMBER: 22016

SHEET NO:
P-002

SHEET 2 OF 10

ISSUED FOR CONSTRUCTION

PLOT DATE: 12/11/2018 7:06:02 AM

WASTE/VENT ISOMETRIC

NO SCALE

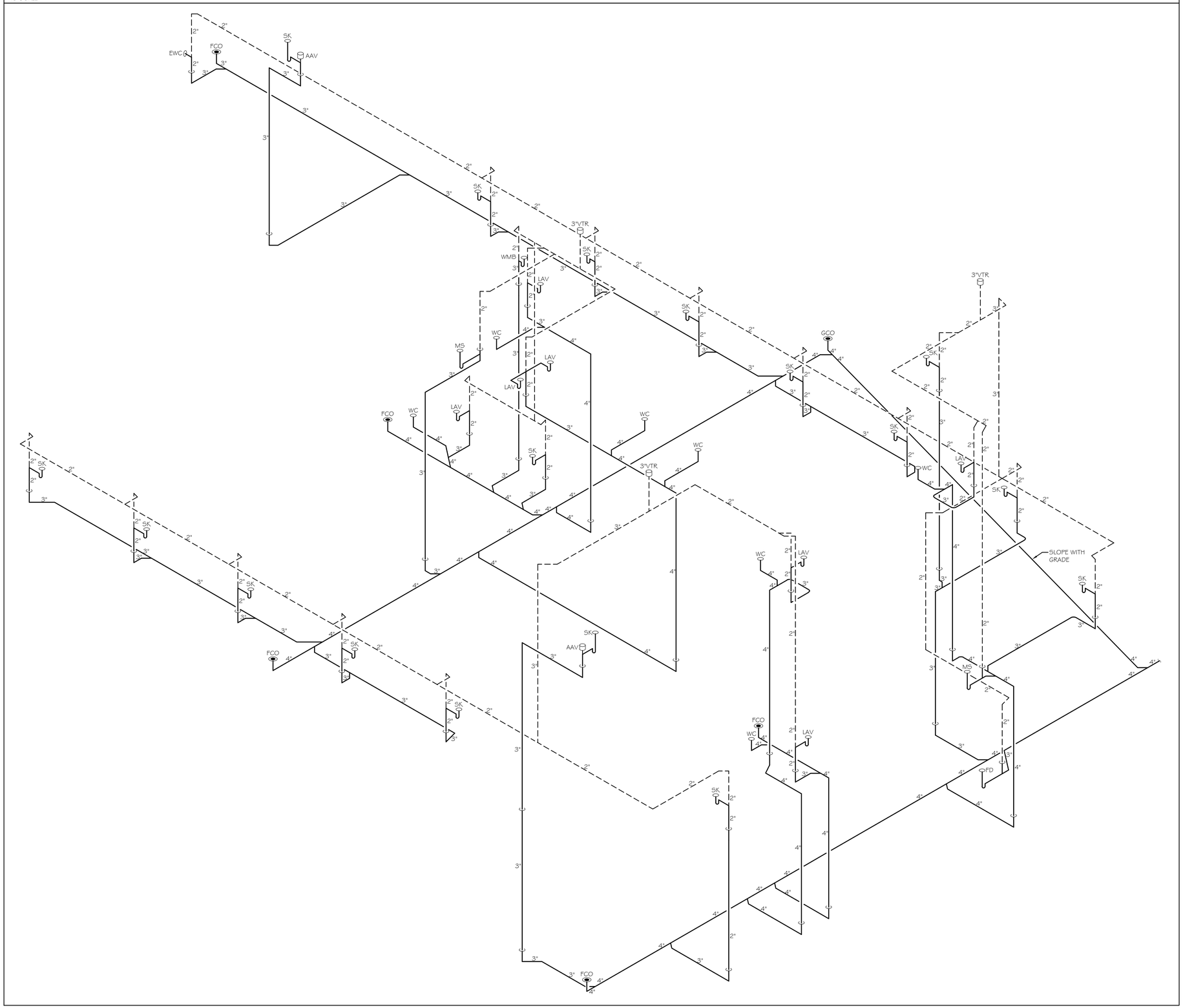

PROFICIENT ENGINEERING
6991 Peachtree Industrial Blvd Building 700
Peachtree Corners, Georgia 30092
404.330.9798
PROJECT # 123309

STROUD AND COMPANY
427 8th Street - Macon, Ga 31201
478-743-5097

ALL Architecture, LLC
2052 CHRYSLER DRIVE NE, ATLANTA, GA 30345
TELEPHONE: (404) 316-2896
E-MAIL: INFO@ALLARCHLLC.COM

REVISIONS

NO.	DATE

COPYRIGHT
THIS DRAWING AND ALL REPRODUCTIONS ARE COPYRIGHTED AND THE PROPERTY OF ALL ARCHITECTURE, LLC AND MAY NOT BE USED IN ANY WAY WITHOUT THEIR PERMISSION.

PROJECT TITLE:

HAMILTON DENTAL
222 CHAMBLESS LN,
HAMILTON, GA 31811

SEAL:

GEORGIA REGISTERED PROFESSIONAL ENGINEER
NO. 039068
MIKE ROEDER

DRAWN:	CHECKED:
JR	MR
APPROVED:	ISSUE DATE:
MR	07/25/23

CAD FILE NAME: CAD FILE

SHEET TITLE:

SCHEDULES & DETAILS

PROJECT NUMBER: 22016

SHEET NO:

P-003

SHEET 3 OF 10

ISSUED FOR CONSTRUCTION

PLOT DATE: 12/11/2018 7:06:02 AM

KEYNOTES

1. 4" SANITARY SEWER B/G, SEE CIVIL DWG FOR CONT
2. 1½" DOMESTIC WATER SERVICE B/G, SEE CIVIL DWG FOR CONT
3. 1½" DOMESTIC WATER SERVICE ENTRY RISER WITH SOLENOID OPERATED SHUTOFF VALVE & PRESSURE GAUGE. PROVIDE PRESSURE REDUCING VALVE IF INCOMING PRESSURE EXCEEDS 80PSI.
4. ¾" CW DN TO FREEZEPROOF HOSE BIB
5. 3" S UP
6. 4" S UP
7. 2" V DN
8. 2" V UP

PROFICIENT ENGINEERING
6991 Peachtree Industrial Blvd Building 700
Peachtree Corners, Georgia 30092
404.330.9798
PROJECT # 123309

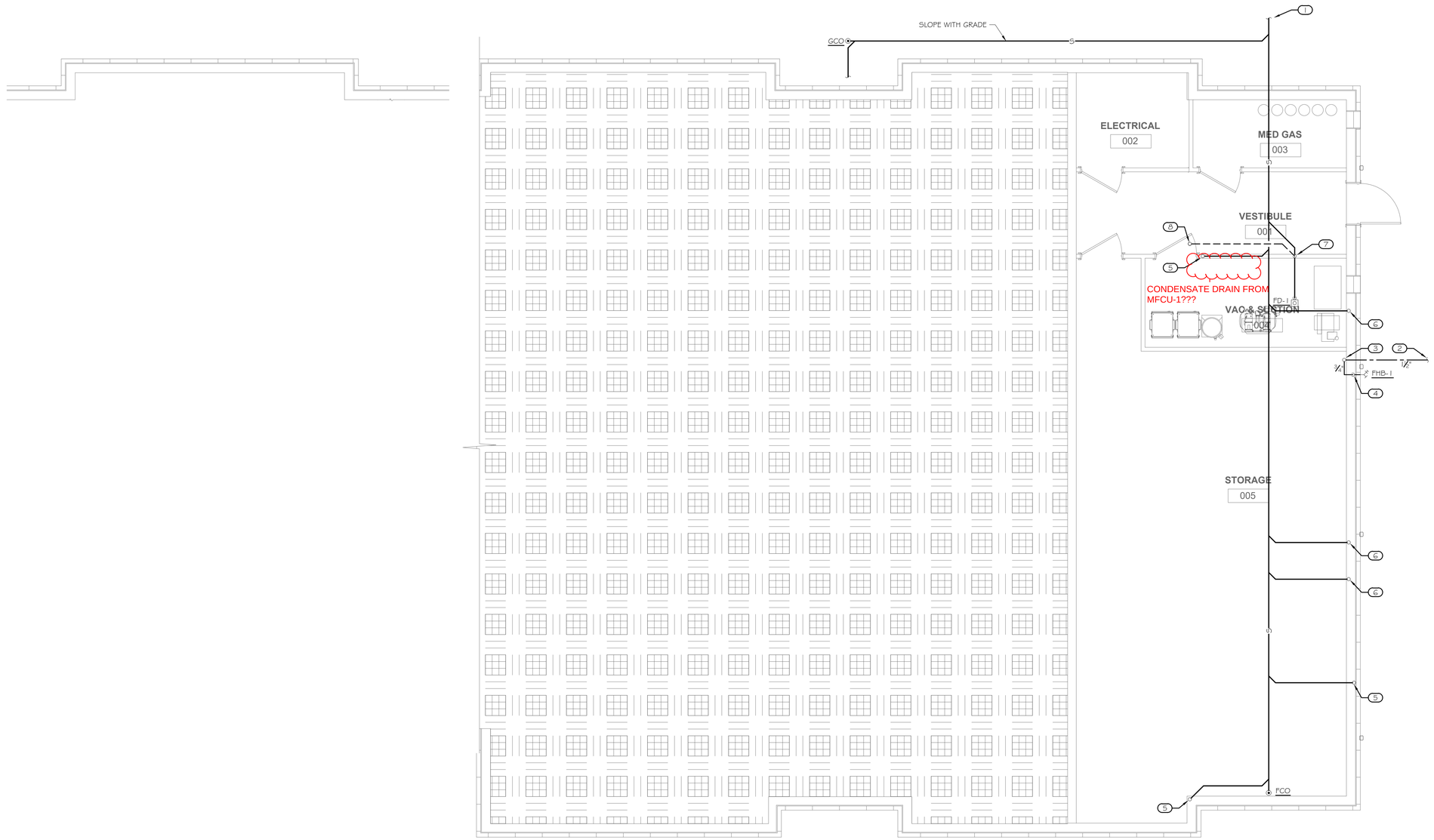

1 P-100 BASEMENT FLOOR PLAN - WATER & SANITARY
1/4" = 1'-0"

STROUD AND COMPANY
427 8th Street · Macon, Ga 31201
478-743-5097

ALL Architecture, LLC
2052 CHRYSLER DRIVE NE, ATLANTA, GA 30345
TELEPHONE: (404) 316-2896
E-MAIL: INFO@ALLARCHLLC.COM

REVISIONS	
NO.	DATE

COPYRIGHT
THIS DRAWING AND ALL REPRODUCTIONS ARE COPYRIGHTED AND THE PROPERTY OF ALL ARCHITECTURE, LLC AND MAY NOT BE USED IN ANY WAY WITHOUT THEIR PERMISSION.

PROJECT TITLE:
HAMILTON DENTAL
222 CHAMBLESS LN,
HAMILTON, GA 31811

SEAL:
GEORGIA REGISTERED PROFESSIONAL ENGINEER MIKE ROEDER No. 039988

DRAWN:	CHECKED:
JR	MR
APPROVED:	ISSUE DATE:
MR	07/25/23

CAD FILE NAME: CAD FILE

SHEET TITLE:
BASEMENT FLOOR PLAN - PLUMBING

PROJECT NUMBER: 22016

SHEET NO:
P-100

SHEET 4 OF 10

ISSUED FOR CONSTRUCTION

PLOT DATE: 12/11/2018 7:06:02 AM

KEYNOTES

1. 4" SANITARY SEWER B/G, SEE P-103 CONT
2. 2" V DN
3. 3" V UP
4. 3" S UP
5. 4" S UP
6. 3" S DN
7. 4" S DN
8. 3" S STACK
9. 2" V UP

PROFICIENT ENGINEERING
6991 Peachtree Industrial Blvd Building 700
Peachtree Corners, Georgia 30092
404.330.9798
PROJECT # 123309

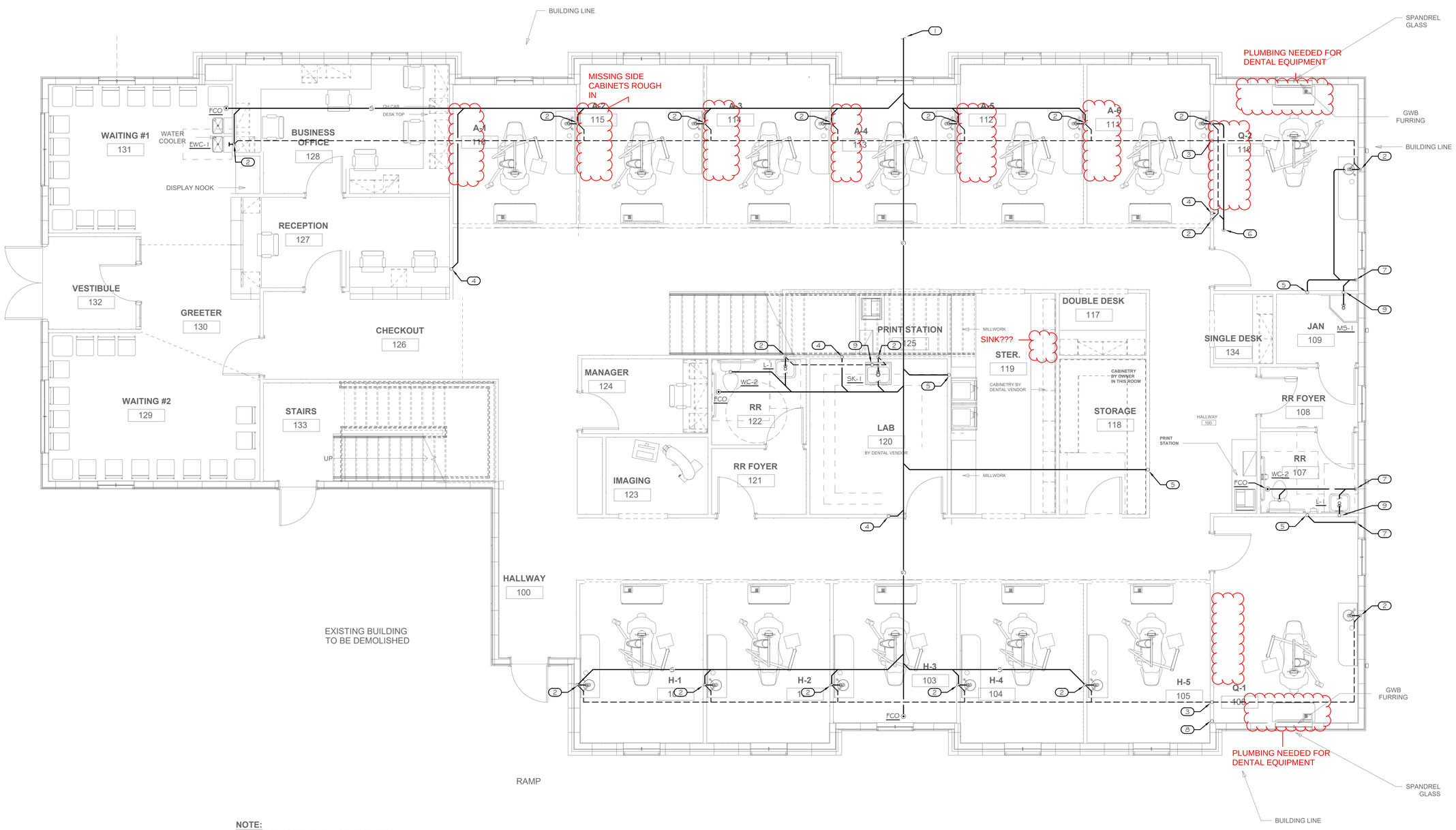

NOTE:
VALANCE LIGHT AT ALL OH CABINETS

1 / P-101 1ST FLOOR PLAN - WASTE & VENT
1/4" = 1'-0"

STROUD AND COMPANY
427 8th Street - Macon, Ga 31201
478-743-5097

ALL Architecture, LLC
2052 CHRYSLER DRIVE NE, ATLANTA, GA 30345
TELEPHONE: (404) 316-2896
E-MAIL: INFO@ALLARCHLLC.COM

REVISIONS	
NO.	DATE

COPYRIGHT
THIS DRAWING AND ALL REPRODUCTIONS ARE COPYRIGHTED AND THE PROPERTY OF ALL ARCHITECTURE, LLC AND MAY NOT BE USED IN ANY WAY WITHOUT THEIR PERMISSION.

PROJECT TITLE:
HAMILTON DENTAL
222 CHAMBLESS LN,
HAMILTON, GA 31811

SEAL:
GEORGIA REGISTERED PROFESSIONAL ENGINEER No. 039968 MIKE ROEDER

DRAWN: JR	CHECKED: MR
APPROVED: MR	ISSUE DATE: 07/25/23

CAD FILE NAME: CAD FILE

SHEET TITLE:
1ST FLOOR PLAN - SANITARY

PROJECT NUMBER: 22016

SHEET NO:
P-101

SHEET 6 OF 10

ISSUED FOR CONSTRUCTION

PLOT DATE: 12/11/2018 7:06:02 AM

KEYNOTES

1. 3" V UP TO 3" VTR
2. 2" V DN
3. 3" S DN
4. 4" S DN
5. AIR ADMITTANCE VALVE AAV-1 LOCATED UNDER COUNTER
6. 3" V DN

PROFICIENT ENGINEERING
6991 Peachtree Industrial Blvd Building 700
Peachtree Corners, Georgia 30092
404.330.9798
PROJECT # 123309

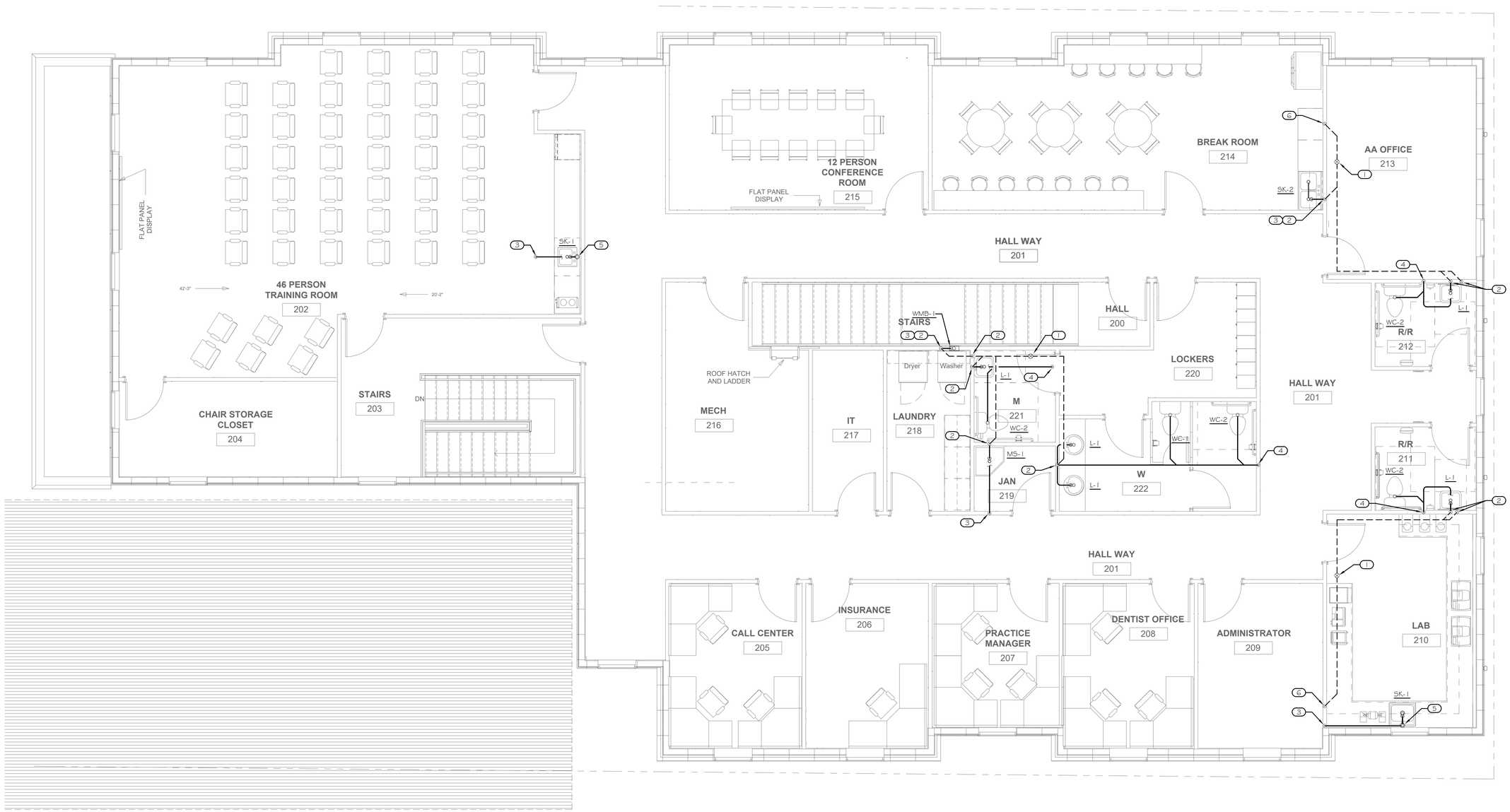

1 P-102 2ND FLOOR PLAN - WASTE & VENT
1/4" = 1'-0"

PLOT DATE: 12/11/2018 7:06:02 AM

STROUD AND COMPANY
427 8th Street · Macon, Ga 31201
478-743-5097

ALL Architecture, LLC
2052 CHRYSLER DRIVE NE, ATLANTA, GA 30345
TELEPHONE: (404) 316-2896
E-MAIL: INFO@ALLARCHLLC.COM

REVISIONS	
NO.	DATE

COPYRIGHT
THIS DRAWING AND ALL REPRODUCTIONS ARE COPYRIGHTED AND THE PROPERTY OF ALL ARCHITECTURE, LLC AND MAY NOT BE USED IN ANY WAY WITHOUT THEIR PERMISSION.

PROJECT TITLE:
HAMILTON DENTAL
222 CHAMBLESS LN,
HAMILTON, GA 31811

SEAL:
GEORGIA REGISTERED PROFESSIONAL ENGINEER No. 039968 MIKE ROEDER

DRAWN: JR	CHECKED: MR
APPROVED: MR	ISSUE DATE: 07/25/23

CAD FILE NAME: CAD FILE

SHEET TITLE:
2ND FLOOR PLAN - SANITARY

PROJECT NUMBER: 22016

SHEET NO:
P-102

SHEET 9 OF 10

ISSUED FOR CONSTRUCTION

DENTAL EQUIPMENT NOTES

CONTRACTOR SHALL FULLY COORDINATE THE INSTALLED EQUIPMENT WITH THESE DRAWINGS AND THE BRAND DESIGN DRAWINGS (AS APPLICABLE) TO ENSURE THAT ALL EQUIPMENT IS PROVIDED WITH THE REQUIRED VACUUM AND AIR CONNECTIONS.

DO NOT USE 4-WAY CROSS FITTINGS IN VACUUM PIPING. STAGGER BRANCH LINES FROM VACUUM MAIN.

SLOPE VACUUM PIPING ¼" PER 10 FEET OF PIPING TOWARD VACUUM PUMP.

INSTALL VACUUM AND AIR PIPING IN ACCORDANCE WITH NFPA 99.

INSTALL COMPRESSED AIR TAKEOFFS TO OUTLETS FROM TOP OF MAIN. SLOPE TAKE OFF PIPING TO OUTLETS.

KEYNOTES

1. AIR LINE DN TO DENTAL AIR COMPRESSOR, FIELD VERIFY EXACT LOCATION
2. ½" AIR LINE UP
3. 1½" VAC UP
4. VACUUM LINE TO DRY VACUUM PUMP, FIELD VERIFY EXACT LOCATION

PROFICIENT ENGINEERING
6991 Peachtree Industrial Blvd Building 700
Peachtree Corners, Georgia 30092
404.330.9798
PROJECT # 123309

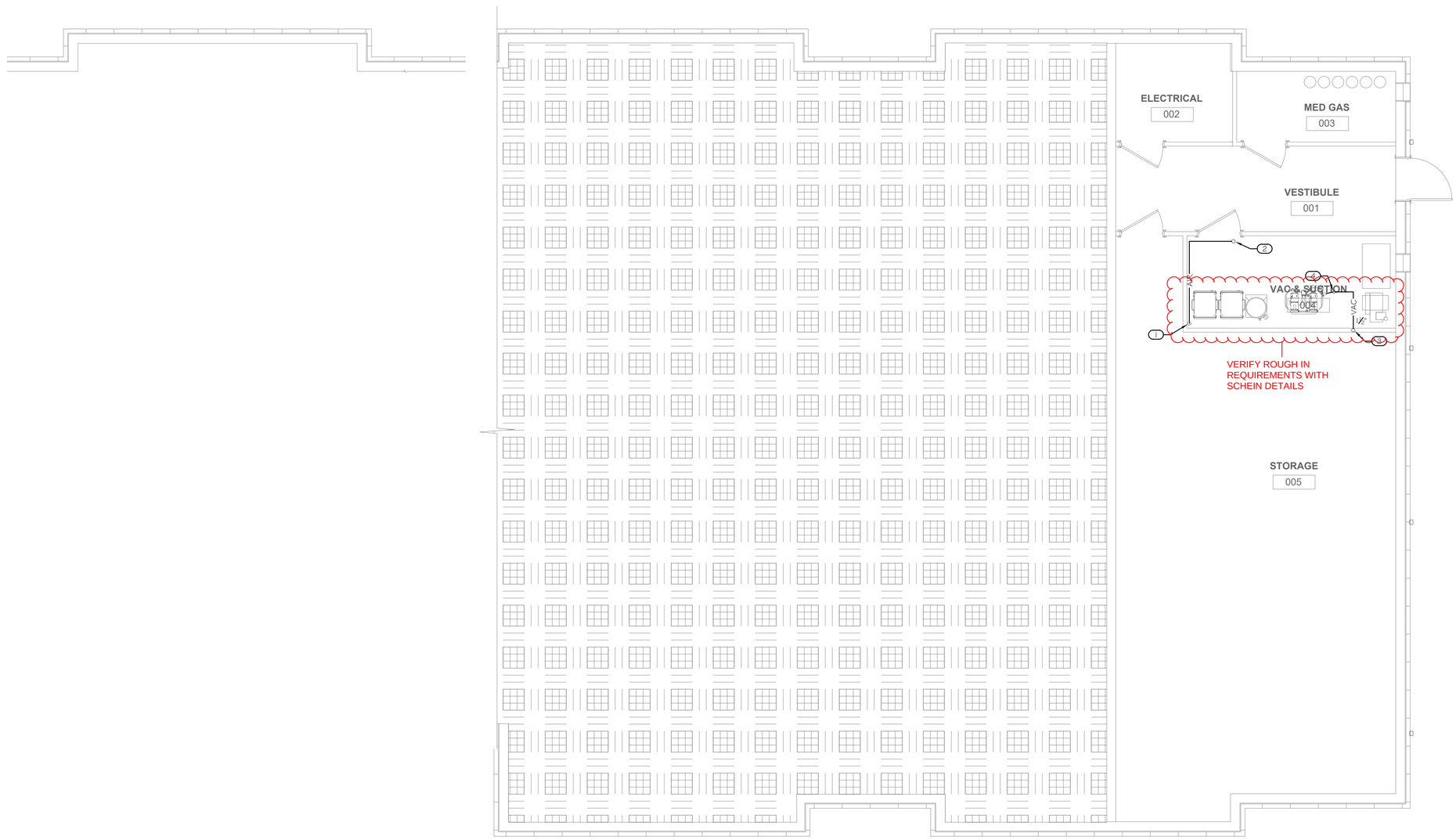

1 / P-110 BASEMENT FLOOR PLAN - COMPRESSED AIR & VACUUM
1/4" = 1'-0"

STROUD AND COMPANY
427 8th Street : Macon, Ga 31201
478-743-5997

ALL Architecture, LLC
2052 CHRYSLER DRIVE NE, ATLANTA, GA 30345
TELEPHONE: (404) 316-2896
E-MAIL: INFO@ALLARCHLLC.COM

REVISIONS	
NO.	DATE

COPYRIGHT
THIS DRAWING AND ALL REPRODUCTIONS ARE COPYRIGHTED AND THE PROPERTY OF ALL ARCHITECTURE, LLC AND MAY NOT BE USED IN ANY WAY WITHOUT THEIR PERMISSION.

PROJECT TITLE:
HAMILTON DENTAL
222 CHAMBLESS LN,
HAMILTON, GA 31811

SEAL:
GEORGIA REGISTERED PROFESSIONAL ENGINEER
No. 035998
MIKE ROEDER

DRAWN:	CHECKED:
JR	MR
APPROVED:	ISSUE DATE:
MR	07/25/23

CAD FILE NAME: CAD FILE

SHEET TITLE:
BASEMENT FLOOR PLAN - AIR & VACUUM

PROJECT NUMBER: 22016

SHEET NO:
P-110

SHEET 5 OF 10

ISSUED FOR CONSTRUCTION

PLOT DATE: 12/11/2018 7:06:02 AM

KEYNOTES

1. ½" CW DN
2. ½" CW UP
3. ¾" CW DN
4. 1½" CW DN
5. ½" CW & ½" HW DN
6. ½" CW & ½" HW UP
7. ½" CW & ½" HW UP
8. 1½" CW, 1½" HW & ¾" HWR TO STAND MOUNTED WATER HEATER, SEE DETAIL.
9. ¾" HWR TO RECIRCULATION PUMP, SEE DETAIL

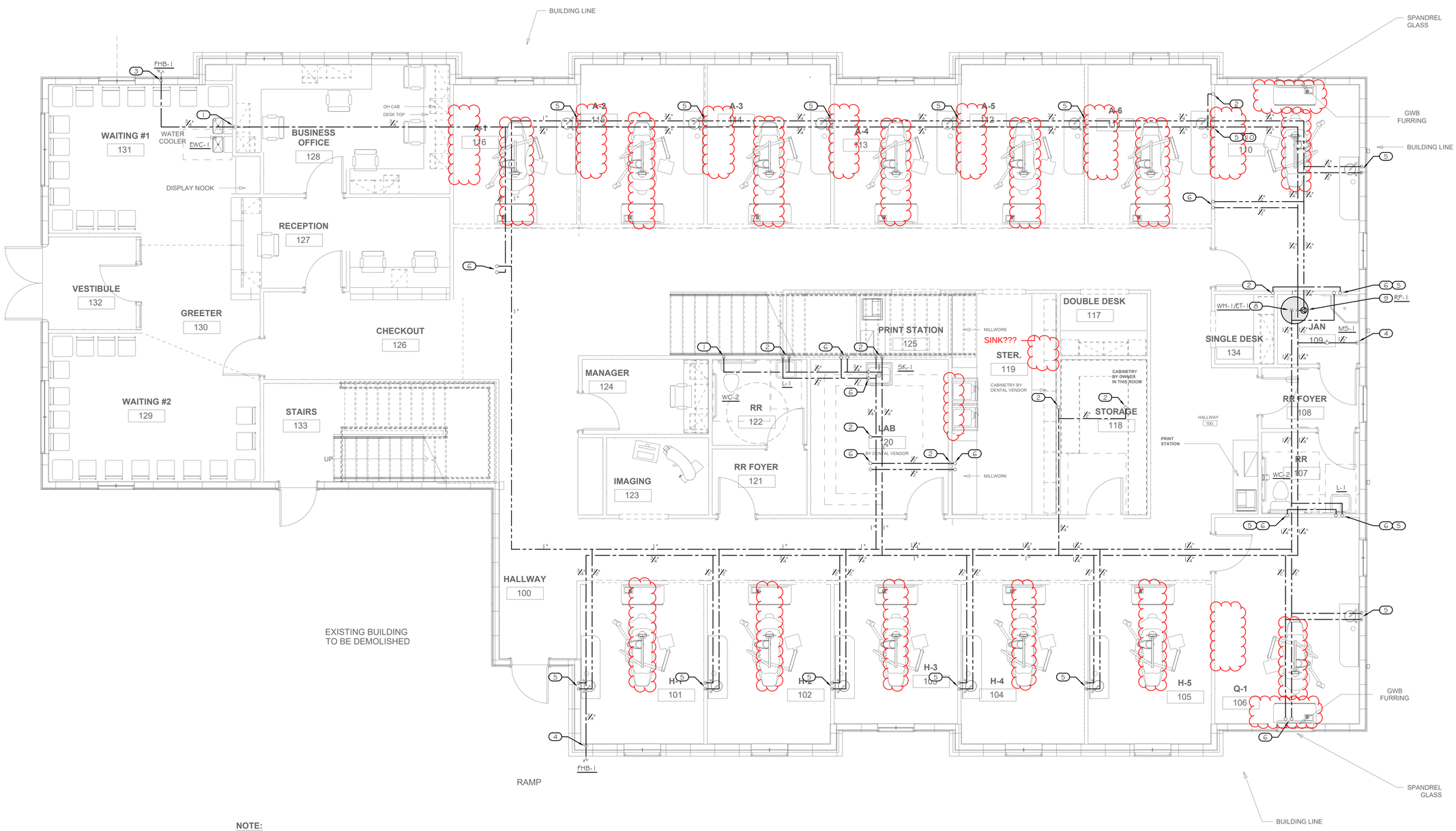

1 P-111 1ST FLOOR PLAN - WATER
1/4" = 1'-0"

PROFICIENT ENGINEERING
6991 Peachtree Industrial Blvd Building 700
Peachtree Corners, Georgia 30092
404.330.9798
PROJECT # 123309

STROUD AND COMPANY
427 8th Street · Macon, Ga 31201
478-743-5097

ALL Architecture, LLC
2052 CHRYSLER DRIVE NE, ATLANTA, GA 30345
TELEPHONE: (404) 316-2896
E-MAIL: INFO@ALLARCHLLC.COM

REVISIONS

NO.	DATE

COPYRIGHT
THIS DRAWING AND ALL REPRODUCTIONS ARE COPYRIGHTED AND THE PROPERTY OF ALL ARCHITECTURE, LLC AND MAY NOT BE USED IN ANY WAY WITHOUT THEIR PERMISSION.

PROJECT TITLE:
HAMILTON DENTAL
222 CHAMBLESS LN,
HAMILTON, GA 31811

SEAL:
GEORGIA REGISTERED PROFESSIONAL ENGINEER MIKE ROEDER No. 039988

DRAWN: JR	CHECKED: MR
APPROVED: MR	ISSUE DATE: 07/25/23

CAD FILE NAME: CAD FILE

SHEET TITLE:
1ST FLOOR PLAN - WATER

PROJECT NUMBER: 22016

SHEET NO:
P-111

SHEET 7 OF 10

ISSUED FOR CONSTRUCTION

PLOT DATE: 12/11/2018 7:06:02 AM

KEYNOTES

1. ½" CW DN
2. ½" CW & ½" HW DN

PROFICIENT ENGINEERING
6991 Peachtree Industrial Blvd Building 700
Peachtree Corners, Georgia 30092
404.330.9798
PROJECT # 123309

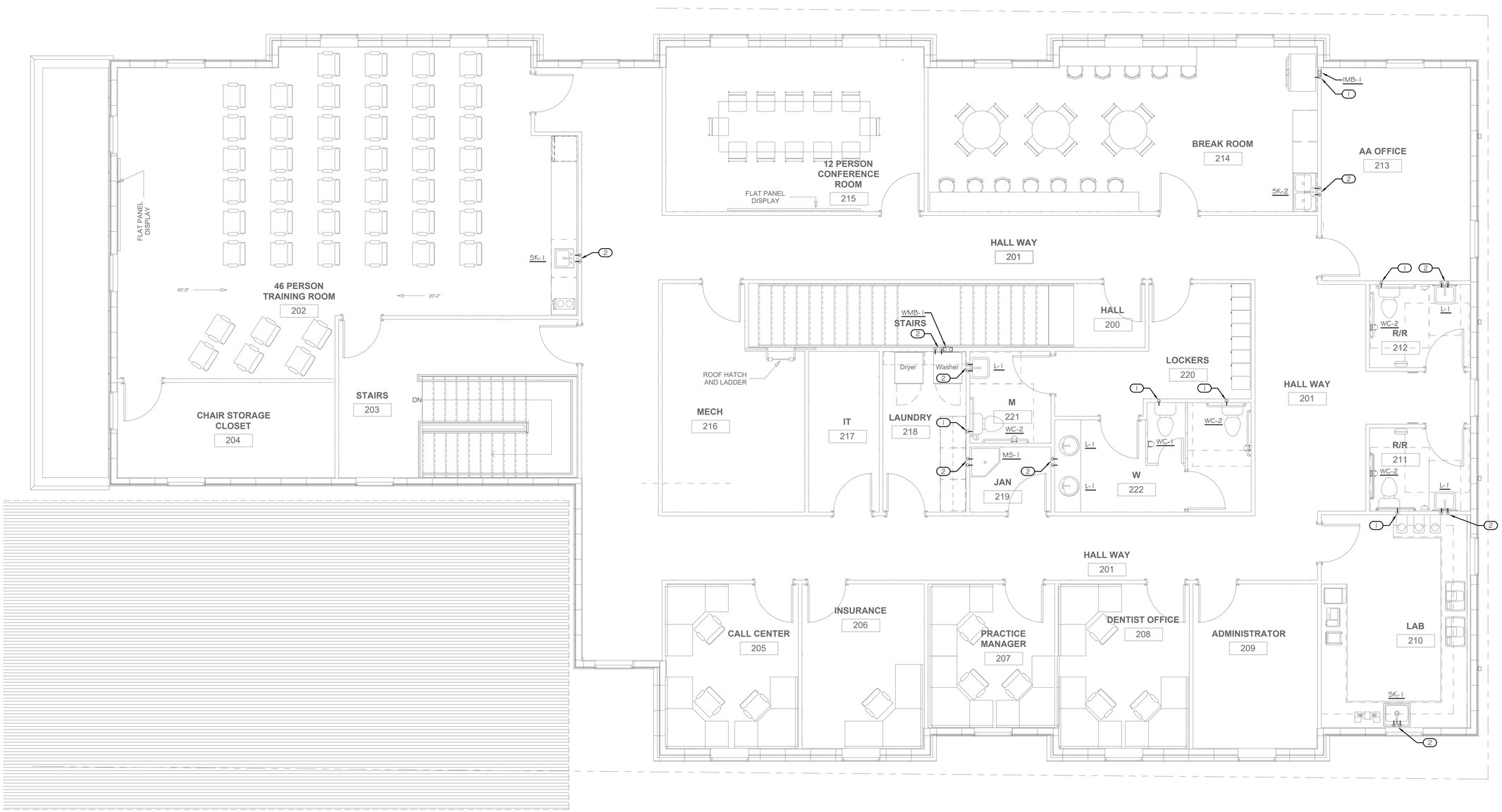

1 (P-112) 2ND FLOOR PLAN - WATER
1/4" = 1'-0"

STROUD AND COMPANY
427 8th Street - Macon, Ga 31201
478-743-5097

ALL Architecture, LLC
2052 CHRYSLER DRIVE NE, ATLANTA, GA 30345
TELEPHONE: (404) 316-2896
E-MAIL: INFO@ALLARCHLLC.COM

REVISIONS	
NO.	DATE

COPYRIGHT
THIS DRAWING AND ALL REPRODUCTIONS ARE COPYRIGHTED AND THE PROPERTY OF ALL ARCHITECTURE, LLC AND MAY NOT BE USED IN ANY WAY WITHOUT THEIR PERMISSION.

PROJECT TITLE:
HAMILTON DENTAL
222 CHAMBLESS LN,
HAMILTON, GA 31811

SEAL:
GEORGIA REGISTERED No. 039988 PROFESSIONAL ENGINEER MIKE ROEDER

DRAWN: JR	CHECKED: MR
APPROVED: MR	ISSUE DATE: 07/25/23

CAD FILE NAME: CAD FILE

SHEET TITLE:
2ND FLOOR PLAN - WATER

PROJECT NUMBER: 22016

SHEET NO:
P-112

SHEET 10 OF 10

ISSUED FOR CONSTRUCTION

PLOT DATE: 12/11/2018 7:06:02 AM

DENTAL EQUIPMENT NOTES

CONTRACTOR SHALL FULLY COORDINATE THE INSTALLED EQUIPMENT WITH THESE DRAWINGS AND THE BRAND DESIGN DRAWINGS (AS APPLICABLE) TO ENSURE THAT ALL EQUIPMENT IS PROVIDED WITH THE REQUIRED VACUUM AND AIR CONNECTIONS.

DO NOT USE 4-WAY CROSS FITTINGS IN VACUUM PIPING. STAGGER BRANCH LINES FROM VACUUM MAIN.

SLOPE VACUUM PIPING ¼" PER 10 FEET OF PIPING TOWARD VACUUM PUMP.

INSTALL VACUUM AND AIR PIPING IN ACCORDANCE WITH NFPA 99.

INSTALL COMPRESSED AIR TAKEOFFS TO OUTLETS FROM TOP OF MAIN. SLOPE TAKE OFF PIPING TO OUTLETS.

KEYNOTES

1. ½" AIR LINE DN
2. ½" AIR LINE DN FOR CONNECTION TO EQUIPMENT. FIELD COORDINATE EXACT LOCATION AND PROVIDE ALL NECESSARY FITTINGS FOR CONNECTION PER MANUFACTURERS REQUIREMENTS
3. ½" AIR LINE UP FOR CONNECTION TO EQUIPMENT. FIELD COORDINATE EXACT LOCATION AND PROVIDE ALL NECESSARY FITTINGS FOR CONNECTION PER MANUFACTURERS REQUIREMENTS
4. ¾" VACUUM LINE UP FOR CONNECTION TO DENTAL EQUIPMENT. FIELD COORDINATE EXACT LOCATION AND PROVIDE ALL NECESSARY FITTINGS FOR CONNECTION PER MANUFACTURERS REQUIREMENTS
5. 1½" VAC DN

PROFICIENT ENGINEERING
6991 Peachtree Industrial Blvd Building 700
Peachtree Corners, Georgia 30092
404.330.9798
PROJECT # 123309

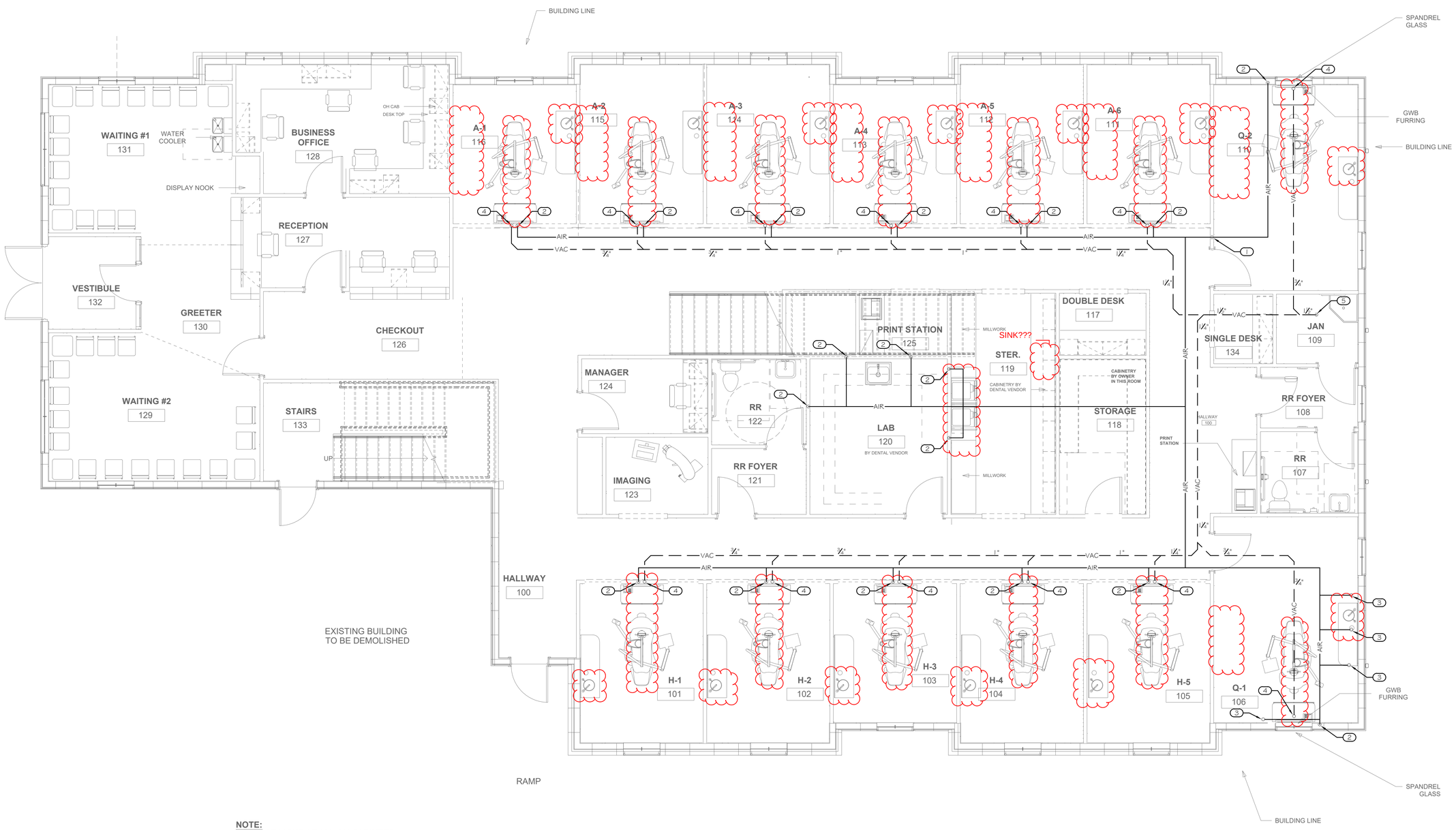

NOTE:
VALANCE LIGHT AT ALL OH CABINETS

1 / P-121 1ST FLOOR PLAN - COMPRESSED AIR & VACUUM
1/4" = 1'-0"

PLOT DATE: 12/11/2018 7:06:02 AM

STROUD AND COMPANY
427 8th Street · Macon, Ga 31201
478-743-5997

ALL Architecture, LLC
2052 CHRYSLER DRIVE NE, ATLANTA, GA 30345
TELEPHONE: (404) 316-2896
E-MAIL: INFO@ALLARCHLLC.COM

REVISIONS	
NO.	DATE

COPYRIGHT
THIS DRAWING AND ALL REPRODUCTIONS ARE COPYRIGHTED AND THE PROPERTY OF ALL ARCHITECTURE, LLC AND MAY NOT BE USED IN ANY WAY WITHOUT THEIR PERMISSION.

PROJECT TITLE:
HAMILTON DENTAL
222 CHAMBLESS LN,
HAMILTON, GA 31811

SEAL:
GEORGIA REGISTERED PROFESSIONAL ENGINEER
No. 039968
MIKE ROEDER

DRAWN: JR	CHECKED: MR
APPROVED: MR	ISSUE DATE: 07/25/23

CAD FILE NAME: CAD FILE

SHEET TITLE:
1ST FLOOR PLAN - AIR & VACUUM

PROJECT NUMBER: 22016

SHEET NO:
P-121

SHEET 8 OF 10

ISSUED FOR CONSTRUCTION

SPECIFICATIONS

GENERAL

CONTRACTOR SHALL REFER TO ALL RELATED DOCUMENTS, ARCHITECTURAL, STRUCTURAL, CIVIL AND MEP DRAWINGS, AND FULLY UNDERSTAND THE SCOPE OF WORK AND CONDITION OF CONSTRUCTION.

THE WORK UNDER THIS SPECIFICATIONS AND DRAWINGS SHALL INCLUDE ALL LABOR.

ALL INSTALLATION OF DEVICES AND CONNECTION OF CONDUCTORS SHALL BE PERFORMED BY LICENSED AND SKILLED ELECTRICIAN OR JOURNEYMAN.

ALL WORK SHALL BE COMPLETED TO THE SATISFACTION OF THE OWNER. IF ANY PORTION OF THE WORK IS FOUND UNSATISFACTORY BY THE OWNER, IT SHALL BE REMOVED AND REINSTALLED WITHOUT DELAY AT NO COST TO THE OWNER.

THE WORK INCLUDES, BUT NOT LIMITED TO:
THE COMPLETE ELECTRICAL DISTRIBUTION SYSTEM.
ROUGH-IN AND FINAL CONNECTIONS TO ALL DEVICES REQUIRING ELECTRICAL POWER, INCLUDING OWNER PROVIDED EQUIPMENT.
LIGHTING CONTROL
LIGHTING FIXTURES

EACH CONTRACTOR SHALL OBTAIN ALL PERMITS AND INSPECTIONS REQUIRED BY THE REGULATORY AUTHORITIES. ALL FEES RELATED TO OBTAINING PERMITS AND INSPECTION SHALL BE PAID FOR BY EACH CONTRACTOR IN HIS TRADE.

ALL MATERIALS AND WORKMANSHIP SHALL COMPLY WITH LOCAL, COUNTY, STATE, AND NATIONAL ELECTRICAL CODE 2020, SPECIFICATIONS, UTILITY COMPANY REQUIREMENTS AND ALL INDUSTRY STANDARDS.

ANY DIFFERENCES IN ABOVE MENTIONED REQUIREMENTS, THE MOST STERN SHALL OVERRULE ALL OTHERS.

IN ADDITION TO ABOVE MENTIONED CODES AND SPECIFICATIONS, THE FOLLOWING INDUSTRY STANDARDS SHALL BE COMPLIED IF THEY ARE MORE STRINGENT.
IEEE
IES
IECC 2015
ASHRAE 90.1
NFPA
NEMA
UL
ADA

THE MANUFACTURERS PUBLISHED DIRECTIONS SHALL BE FOLLOWED IN THE DELIVERY, STORAGE, PROTECTION, INSTALLATION AND WIRING OF ALL EQUIPMENT AND MATERIAL.

THE DRAWINGS SHOW DIAGRAMMATICALLY THE LOCATIONS OF THE VARIOUS LINES, CONDUITS, FIXTURES, AND EQUIPMENT AND THE METHOD OF CONNECTING AND CONTROLLING THEM. IT IS NOT INTENDED TO SHOW EVERY CONNECTION IN DETAIL AND ALL FITTINGS REQUIRED FOR A COMPLETE SYSTEM. THE SYSTEMS SHALL INCLUDE BUT ARE NOT LIMITED TO THE ITEMS SHOWN ON THE DRAWINGS. EXACT LOCATIONS OF THESE ITEMS SHALL BE DETERMINED BY REFERENCE TO THE GENERAL PLANS AND MEASUREMENTS AT THE BUILDING AND IN COOPERATION WITH THE OTHER SUBCONTRACTORS, AND IN ALL CASES, SHALL BE SUBJECT TO THE APPROVAL OF THE OWNER. THE OWNER RESERVES THE RIGHT TO MAKE ANY REASONABLE CHANGE IN THE LOCATION OF ANY PART OF THIS WORK WITHOUT ADDITIONAL COST TO THE OWNER.

CONTRACTOR SHALL SEEK APPROVAL FROM THE OWNER FOR ANY CHANGES TO THE SPECIFICATIONS OR CONTRACT DOCUMENTS.

ANY EXCEPTIONS, INCONSISTENCIES AND CONFLICTS IN CONTRACT DOCUMENTS, SPECIFICATIONS AND CONTRACT DOCUMENTS BY OTHER TRADE SHALL BE BROUGHT TO ATTENTION TO THE OWNER PRIOR TO BID.

CONTRACTOR SHALL COORDINATE AND VERIFY THE WORK WITH EXISTING CONDITIONS AND THE WORK OF OTHER TRADE PRIOR TO ANY FABRICATIONS OR INSTALLATION. IF THE LAYOUT OF THE DEVICES ON DRAWINGS ARE IMPRACTICAL TO THE CONDITION IN FIELD, CONTRACTOR SHALL NOTIFY THE OWNER IMMEDIATELY PRIOR TO ANY FABRICATION OR INSTALLATION.

ELECTRICAL DEVICES ARE INDICATED ON DRAWINGS AT APPROXIMATE LOCATIONS. THE OWNER RESERVE THE RIGHT TO MAKE REASONABLE CHANGES IN LOCATIONS WITHOUT ADDITIONAL COSTS.

THE LINES INDICATING BRANCH CIRCUITS DO NOT REPRESENT THE ROUTING OF ELECTRICAL CONDUITS. THEY INDICATE THE LAYOUT AND CONTROL OF CIRCUITS.

PRODUCTS AND WORK

MATERIALS FURNISHED SHALL BE NEW AND BY STANDARD MANUFACTURERS AND MUST CONFORM TO THE NATIONAL BOARD OF FIRE UNDERWRITER'S REQUIREMENTS AND BEAR THE UNDERWRITER'S LABORATORIES' SEAL OF APPROVAL.

LISTED MANUFACTURERS, MODELS, OR CATALOGUE NUMBERS IN PART OR ALL SHALL ENTAIL TO INCLUDE THE PUBLISHED MANUFACTURER'S DESCRIPTION AND SPECIFICATION.

CONTRACTOR SHALL NOT INTERPRET THAT THE LISTED MANUFACTURERS IN SPECIFICATIONS OR DRAWINGS TO EXCLUDE ALL OTHER MANUFACTURERS.

CONTRACTOR SHALL MAKE CERTAIN THAT ALL EQUIPMENT FIT IN THE SPACE DESIGNATED AND DESIGNED FOR THE SURROUNDINGS IT OCCUPIES.

COMPLETE CATALOGUE ILLUSTRATION AND DESCRIPTIONS OF ALL EQUIPMENT SHALL BE SUBMITTED TO THE OWNER PRIOR TO ORDERING ANY EQUIPMENT.

ALL HORIZONTAL RUNS OF CONDUITS SHALL BE SUPPORTED BY MEANS OF APPROVED HANGER FROM THE STRUCTURAL CEILING.

COORDINATE THE WORK UNDER THIS SECTION WITH ALL OTHER TRADES.

CONDUITS AND RACEWAYS:

MANUFACTURERS: SQUARE D, B-LINE, ALLIED TUBE & CONDUIT, HOFFMAN, CARLON ELECTRICAL, WIREMOLD.

OUTDOORS EXPOSED: RIGID STEEL.
OUTDOORS CONCEALED ABOVE GROUND: RIGID STEEL.
OUTDOORS UNDERGROUND: TYPE EPC-40-PVC
OUTDOORS CONNECTION TO VIBRATING EQUIPMENT (INCLUDING TRANSFORMERS AND MOTOR DRIVEN EQUIPMENT): LFMC.
BOXES AND ENCLOSURES ABOVE GROUND: NEMA 3R UNLESS NOTED OTHERWISE ON PLANS.
INDOORS EXPOSED NOT SUBJECT TO PHYSICAL DAMAGE: EMT. INDOORS EXPOSED NOT SUBJECT TO SEVERE PHYSICAL DAMAGE: EMT.
INDOORS EXPOSED SUBJECT TO SEVERE PHYSICAL DAMAGE: RIGID STEEL CONDUIT.
INDOORS CONCEALED IN CEILINGS AND INTERIOR WALLS AND PARTITIONS: EMT.
INDOORS CONNECTION TO VIBRATING EQUIPMENT: FMC, EXCEPT USE LFMC IN DAMP OR WET LOCATIONS.
INDOORS DAMP OR WET LOCATIONS: IMC.
INDOORS LOW-VOLTAGE CABLES: EMT.

SPECIFICATIONS

CONDUCTORS:

COPPER CONDUCTORS #10 AND SMALLER: LABELED PER UL 83, TYPE THHN/THWN, SOLID COPPER 600 VOLT INSULATION, UNIFORM COLOR CODED JACKET WITH JACKET DATA. METAL CLAD (TYPE MC) CABLE WHERE INSTALLED IN ACCORDANCE WITH NEC ARTICLE 330.

COPPER CONDUCTORS #8 OR LARGER: LABELED PER UL 83, TYPE THHN/THWN, STRANDED COPPER, 600VOLT INSULATION, UNIFORM COLOR CODED JACKET WITH JACKET DATA.

ACCEPTABLE MANUFACTURERS OF CONDUCTORS:

PIRELLIE
SOUTHWIRE
AETNA
REPUBLIC
AFC
ENCORE WIRE
KERITE

CONTRACTOR MAY USE ALUMINUM CONDUCTORS FOR #4 AWG OR LARGER IN THE PLACE OF COPPER CONDUCTORS. CONTRACTOR SHALL REFER TO NEC TABLE 310-16 FOR EQUIVALENT AMPACITY AND SHALL COMPENSATE FOR VOLTAGE DROP.

CONTRACTOR SHALL MAKE ADEQUATE ADJUSTMENT TO CONDUIT SIZES INDICATED SHOULD ALTERNATIVE CONDUCTOR INSULATION OR MATERIAL BE UTILIZED.

MOLDED CASE CIRCUIT BREAKER:

INCLUDE SCHEDULE OF ALL FUSES, RATINGS, TIME COORDINATION DATA, MANUFACTURER'S STANDARD DATA AND TIME-CURRENT CURVES. ALL DATA SHALL BE BASED ON TEST OF STANDARD PRODUCTS.

APPROVED MANUFACTURERS:
GENERAL ELECTRIC
CUTLER HAMMER
SQUARE D
SIEMENS

THERMAL-MAGNETIC BOLT-IN TYPE CIRCUIT BREAKERS WITH QUICK-MAKE, QUICK-BREAK CONTACTS; TRIP-FREE OPERATION WITH OVER-THE-CENTER TOGGLE HANDLE OR NON-REMOVABLE MONOLITHIC TIE-HANDLE.

MULTI-POLE BREAKERS SHALL HAVE INTERNAL COMMON TRIP AND COMMON RESET WITH A SINGLE TOGGLE HANDLE OR NON-REMOVABLE MONOLITHIC TIE-HANDLE.

TRIP RATINGS SHALL BE MOLDED ON THE HANDLE OR FACE OF BREAKER.

BREAKER TERMINALS SHALL BE RATED TO ACCOMMODATE A MINIMUM OF 75 DEGREE C. CONDUCTORS.

BREAKER SHALL BE RATED FOR MOUNTING AND OPERATION IN ANY POSITION; SHALL ACCOMMODATE AND MATCH THE TYPE OF TERMINATIONS REQUIRED.

SINGLE POLE BREAKERS RATED 15 AND 20 AMPERES SHALL BE UL LABELED AS "SWITCHING BREAKERS" AT THE APPLIED CIRCUIT VOLTAGE.

MULTI-POLE BREAKERS RATED 100 AMPERES AND LARGER SHALL BE MOLDED CASE THERMAL-MAGNETIC BOLT-IN TYPE BREAKER WITH ADJUSTABLE INSTANTANEOUS TRIP.

LIGHTING FIXTURE

SUBMITTAL:
SCHEDULE BY TYPE DESIGNATION ALL LIGHTING FIXTURES, EACH COMPLETE WITH DATA SHEET WITH COMPLETE PHYSICAL, ELECTRICAL AND LIGHTING CHARACTERISTICS, LAMP TYPE AND LAMP DATA.

REFER TO THE "LIGHTING FIXTURE SCHEDULE" \IN THE DRAWINGS FOR INDIVIDUAL FIXTURE DESCRIPTIONS AND MANUFACTURER TYPES.

PROVIDE LAMPS FOR EACH FIXTURE OF QUANTITY, TYPE AND COLOR AS LISTED IN LIGHTING FIXTURE SCHEDULE. GE, SYLVANIA OR PHILIPS ARE ACCEPTABLE.

EACH LIGHTING FIXTURE SHALL BE UL LABELED FOR PROPER OPERATION IN THE TYPE OF CEILING CONSTRUCTION AND FOR THE MOUNTING ARRANGEMENT ON/IN WHICH IT IS INSTALLED.

FIELD VERIFY ACTUAL CEILING SLOPE FOR FIXTURES INSTALLED IN SAME AND ACTUAL FIELD DIMENSIONS AND ANGLES OF CONSTRUCTION FOR ANY FIXTURE CONFORMING THE SHAPE AND LENGTH OF SAME, FOR COORDINATION OF FIXTURE CONSTRUCTION.

PANELBOARD

SUBMITTAL:
INCLUDE SCHEDULE OF EACH PANELBOARD WITH ALL DEVICES AND COMPLETE WITH PHYSICAL AND ELECTRICAL DATA AND WITH RATINGS FOR EACH COMPONENT INCLUDING BREAKER/FUSE OVERLAY CURVES.

LABELED PER UL #67 AND #50, CONFORM WITH NEMA #250 AND PB1, NFPA #70-384 AND 70-373.

ALL JUNCTION BOXES SHALL BE LABELED WITH PANEL AND CIRCUIT DESIGNATION.

PROVIDE TYPED CIRCUIT DIRECTORY WITH EACH CIRCUIT SERVING DEVICES AND AREA ITS SERVING.

APPROVED MANUFACTURERS:
GENERAL ELECTRIC
CUTLER HAMMER
SQUARE D
SIEMENS

LIGHTING CONTROL

TIME SWITCHES:
SOLID STATE, PROGRAMMABLE, WITH ALPHANUMERIC DISPLAY; COMPLYING WITH UL 917. 20-A BALLAST LOAD, 120/240VAC.

TWO ON-OFF SET POINTS ON A 24-HOUR SCHEDULE AND ANNUAL HOLIDAY SCHDULE THAT OVERRIDES THE WEEKLY OPERATION ON HOLIDAYS.

ALLOW CONNECTION OF A PHOTOELECTRIC RELAY AS SUBSTITUTE FOR ON-OFF FUNCTION OF A PROGRAM.

BATTERY BACKUP FOR NOT LESS THAN SEVEN DAYS RESERVE TO MAINTAIN SCHEDULES AND TIME CLOCK.

INDOOR OCCUPANCY SENSORS:
WALL OR CEILING MOUNTED SOLID-STATE INDOOR OCCUPANCY SENSORS WITH A SEPARATE POWER PACK.

ADJUSTABLE TIME-DELAY OVER A RANGE OF 1 TO 30 MINUTES.

SENSOR OUTPUT: CONTACTS RATED TO OPERATE THE CONNECTED RELAY, COMPLYING WITH UL773A. SENSOR IS POWERED FROM POWER PACK.

POWER PACK: DRY CONTACTS RATED FOR 20-A BALLAST LOAD AT 120 OR 277 VAC. AUTOMATIC LIGHT-LEVEL SENSOR: ADJUSTABLE FROM 2 TO 200 FC (21.5 TO 2152 LUX); TURN LIGHTS OFF WHEN SELECTED LIGHTING LEVEL IS PRESENT.

DUAL SENSOR TYPE: DETECT OCCUPANCY AREA USING PIR (PASSIVE INFRA-RED) AND ULTRASONIC DETECTION METHOD.

GROUNDING AND BONDING

ALL GROUNDING AND BONDING SHALL CONFORM TO NEC ARTICLE 250.

COPPER WIRE OR CABLE INSULATED FOR 600V UNLESS REQUIRED BY APPLICABLE CODE OR AUTHORITIES HAVING JURISDICTION.

INSTALL SOLID CONDUCTOR FOR #8 AWG AND SMALLER AND STRANDED CONDUCTORS FOR #6 OR LARGER.

INSTALL INSULATED EQUIPMENT GROUNDING CONDUCTORS FOR ALL EQUIPMENT.

ELECTRICAL GENERAL NOTES

THE DESIGN OF THIS SET OF DOCUMENT IS BASED ON NEC 2020.

ELECTRICAL CONTRACTOR SHALL REFER TO ALL OTHER DESIGN DRAWINGS PRIOR TO BID AND RETAIN FULL UNDERSTANDING OF THE SCOPE OF WORK.

FIXTURE TYPE INDICATED BY UPPER CASE CHARACTERS, SWITCHING AND GROUPING DESIGNATED BY LOWER CASE LETTER AND CIRCUIT BY NUMBER (WHERE APPLICABLE).

REFER TO THE ARCHITECTURAL/INTERIORS REFLECTED CEILING PLANS FOR EXACT FIXTURE PLACEMENT AND DIMENSIONS.

REFER TO THE ARCHITECTURAL/INTERIORS DOCUMENTS FOR ACTUAL DEVICE LOCATIONS AND DIMENSIONS.

COORDINATE THE INSTALLATION OF ALL CEILING MOUNTED DEVICES (FIRE ALARM SYSTEM DEVICES AND SPEAKERS, SOUND SYSTEM SPEAKER, ETC.) TO BE SYMMETRICAL ABOUT LIGHT FIXTURES AND SPRINKLER HEADS. REFER TO THE ARCHITECTURAL REFLECTED CEILING PLAN. TYPICAL.

ALL MOUNTING OF EQUIPMENT IS AS SHOWN UNLESS OTHERWISE NOTED. COORDINATE WITH ARCHITECT THE COLOR/FINISHES OF ALL ELECTRICAL DEVICES, OUTLETS, COVERPLATES AND TRIM.

EMERGENCY BATTERY PACKS AND EXIT SIGNS SHALL BE CONNECTED AHEAD OF ANY SWITCHING DEVICES.

REFER TO MECHANICAL DRAWINGS FOR DUCT SMOKE DETECTOR LOCATIONS AND QUANTITIES OPERATION SHALL INCLUDE DUAL CONTACT BASE WITH LOCAL EQUIPMENT SHUTDOWN AND FIRE ALARM SIGNAL INITIATION.

WHEN CONDUCTOR OR CONDUIT SIZE IS INDICATED FOR BRANCH CIRCUIT HOME RUN, THE CONDUCTOR AND CONDUIT SIZE INDICATED SHALL BE USED FOR THE COMPLETE CIRCUIT.

REFER TO THE APPROPRIATE DRAWINGS FOR THE EXACT LOCATION AND REQUIREMENTS OF EQUIPMENT INSTALLED UNDER OTHER DIVISIONS OF THE DOCUMENTS, WHICH REQUIRE ELECTRICAL SERVICE.

EQUIPMENT GROUNDING CONDUCTORS SHALL BE INSTALLED IN ALL RACEWAYS.

WALL SWITCHES CONTROLLING CIRCUITS OF OPPOSITE PHASES SHALL NOT BE INSTALLED IN COMMON BOX UNLESS PERMANENT BARRIER IS PROVIDED.

ALL HOME RUNS SHALL RUN PARALLEL TO STRUCTURE AS MUCH AS POSSIBLE WHERE CEILING IS EXPOSED.

ALL RACEWAY AND EQUIPMENT SUPPORTS AND HANGERS SHALL BE FULLY COORDINATED WITH STRUCTURAL DRAWINGS TO INSURE LOCATION OF SAME OCCURS WITHIN FOUR (4) INCHES OF PANEL POINT ON BAR JOISTS.

COORDINATE LOCATION OF ALL FLOOR MOUNTED MECHANICAL AND PLUMBING EQUIPMENT IN ORDER TO VERIFY POWER & CONTROL RACEWAY CONCEALED IN SLABS TERMINATED AT PROPER LOCATION.

DISCONNECT SWITCHES, MOTOR STARTERS AND OTHER ELECTRICAL EQUIPMENT INSTALLED ABOVE ACCESSIBLE CEILINGS, AND REQUIRING ACCESS FOR MAINTENANCE, SHALL BE INSTALLED WITH BOTTOM OF DEVICE ONE (1) FOOT ABOVE CEILING TO PROVIDE READY ACCESSIBILITY.

MECHANICAL, PLUMBING, FIRE PROTECTION AND OTHER EQUIPMENT ARE SHOWN ON FLOOR PLAN IN APPROXIMATE LOCATION. COORDINATE WITH M, P, FP AND CONTRACT DRAWINGS/SUBMITTALS FOR EXACT LOCATION OF EQUIPMENT.

GENERAL DIAGRAMMATIC RACEWAY INTERCONNECTIONS OF EQUIPMENT, FIXTURES AND DEVICES ARE INDICATED ON FLOOR AND REFLECTED CEILING PLANS, REFER TO STRUCTURAL AND ARCHITECTURAL PLANS FOR ELEVATION CHANGES AND RACEWAY ROUTES.

RACEWAY FOR EXTERIOR LIGHTING MAY BE INDICATED OUTSIDE OF BUILDING FOOTPRINT FOR CLARITY. ROUTE ALL EXTERIOR LIGHTING RACEWAY WITHIN BUILDING STRUCTURE.

POWER AND COMMUNICATIONS/DATA CONDUITS CAN CROSS AT 90°, BUT WHERE PARALLEL, SHALL BE A MINIMUM OF 8" APART.

TELEVISION AND RADIO ANTENNAS CABLES SHALL HAVE SURGE PROTECTION. GROUND ALL MASTS.

PROVIDE TVSS FOR FIRE ALARM CONTROL PANEL.

FIELD COORDINATE MECHANICAL AND PLUMBING EQUIPMENT ELECTRICAL CHARACTERISTICS WITH DIV. 15 CONTRACTOR PRIOR TO ROUGH-IN. ADJUST ELECTRICAL CONNECTIONS IF NECESSARY TO MATCH ACTUAL EQUIPMENT IN FIELD. FOR EXAMPLE, COORDINATE THE NAMEPLATE OVERCURRENT PROTECTION DEVICE RATING OF MECHANICAL EQUIPMENT AMONG MECHANICAL AND ELECTRICAL SUBCONTRACTORS. ADJUST CIRCUIT BREAKER TO MATCH NAMEPLATE RATING OF EQUIPMENT AT NO ADDITIONAL COST.

FIELD COORDINATE MECHANICAL AND PLUMBING EQUIPMENT REQUIREMENTS FOR ANY SUPPLEMENTAL POWER REQUIREMENTS, INCLUDING BUT NOT LIMITED TO CONTROL CIRCUITS. IT IS THE RESPONSIBILITY OF THE CONTRACTOR TO BRING ALL EQUIPMENT TO ITS INTENDED OPERATIONAL STATUS.

REFER TO FIRE PROTECTION DRAWINGS FOR LOCATIONS OF FLOW AND TAMPER SWITCHES.

EACH PENETRATION OF A FIRE RESISTANT RATED ASSEMBLY BY A PIPE, TUBE WIRE OR CONDUIT SHALL BE PROTECTED BY A THROUGH PENETRATION FIRE STOP SYSTEM THAT HAS BEEN TESTED ACCORDING TO ASTME 814 OR E199.

ELECTRIC RECEPTACLES, SWITCHES, OUTLETS, ETC. SHALL NOT BE INSTALLED BACK TO BACK ON FIRE RESISTANCE RATED WALLS. THEY SHALL BE AT LEAST 24-INCHES APART.

LIGHT SWITCHES AND ELECTRICAL OUTLETS, LOCATED IN ROOMS ACCESSIBLE TO THE DISABLED SHALL BE LOCATED NO HIGHER THAN 48 INCHES AND NO LOWER THAN 15 INCHES ABOVE THE FINISHED FLOOR SURFACE. IF THE REACH OR THE CONTROL IS OVER AN OBSTRUCTION, THE MINIMUM HEIGHT SHALL BE REACHED TO 44 INCHES FOR A FORWARD APPROACH OR 46 INCHES FOR A SIDE APPROACH.

REFER TO LOW VOLTAGE CONSULTANT'S DRAWINGS FOR VOICE, DATA AND CATV OUTLET LOCATIONS. REFER TO LV CONSULTANT'S DRAWINGS FOR ANY ADDITIONAL INFORMATION.

CONNECT ALL EXIT SIGNS TO NEAREST UNSWITCHED PORTION OF THE LIGHTING CIRCUIT IN THE AREA.

ELECTRICAL BOXES INSTALLED IN FIRE RATED WALLS SHALL MAINTAIN THE INTEGRITY OF THE RATED WALL.

SUPPORT ALL VERTICAL RACEWAY PER NEC TABLE 300.19(A).

MAKE ELECTRICAL CONNECTIONS TO ELECTRIC WATER COOLERS FROM GFCI PROTECTED OUTLET IN WALL BEHIND COOLER HOUSING. THE OUTLET AND CORD SHALL NOT BE VISIBLE FROM PUBLIC VIEW.

COORDINATE WITH CUTSHEETS OF ALL EQUIPMENT TO BE INSTALLED AND PROVIDE ADDITIONAL CIRCUITS FOR CONTROLS IF REQUIRED BY MANUFACTURER.

FINAL COLOR, FINISH AND OTHER AESTHETIC PORTIONS OF ALL DEVICES SHALL BE COORDINATED WITH ARCHITECT OR OWNER'S REPRESENTATIVE. THIS SET OF DRAWINGS DOES NOT SUPERCEDE ARCHITECTURAL OR INTERIOR DOCUMENTS.

ALL EXPOSED HORIZONTAL RUNS OF CONDUITS SHALL BE EITHER PARALLEL OR PERPENDICULAR TO EXTERIOR WALLS.

DEVICE COLOR NEEDED

PROVIDE PLENUM RATED CABLES IF THE CABLES ARE EXPOSED AND ROUTED THROUGH PLENUM.

LEGEND

SYMBOLS	DESCRIPTION	TYPICAL MOUNTING HEIGHT UNLESS NOTED OTHERWISE
	DUPLEX RECEPTACLE, 120V, 20A, NEMA 5-20R	18" AFF
	DUPLEX RECEPTACLE, 120V, 20A, NEMA 5-20R	42" AFF OR 6" ABOVE COUNTER TOP
	QUADRAPLEX RECEPTACLE, 120V, 20A, NEMA 5-20R	18" AFF
AC	QUADRAPLEX RECEPTACLE, 120V, 20A, NEMA 5-20R	42" AFF OR 6" ABOVE COUNTER TOP
	DUPLEX RECEPTACLE, 120V, 20A, NEMA 5-20R	FLUSH WITH FINISHED FLOOR
	DUPLEX RECEPTACLE, 120V, 20A, NEMA 5-20R	IN CEILING
	SPECIAL RECEPTACLE, CONFIGURATION AND ELECTRICAL CHARACTERISTIC AS NOTED ON DWG	18" AFF
J	JUNCTION BOX FLUSH IN WALL WITH COVER. SIZE PER NEC.	18" AFF
J	JUNCTION BOX FLUSH IN CEILING WITH COVER. SIZE PER NEC.	IN CEILING
J	JUNCTION BOX FLUSH IN FINSHED FLOOR WITH COVER. SIZE PER NEC.	FLUSH WITH FINISHED FLOOR
$	SWITCH	42" AFF
$3 / $3	SWITCH - 3 WAY	42" AFF
$ / $OS	SWITCH - WALL MTD, INTEGRAL OCCUPANCY SENSOR	42" AFF
$LV	SWITCH - WALL MTD, LOW VOLTAGE, PILOT LIGHT	42" AFF
$ / $D	SWITCH - WALL MTD, DIMMING	42" AFF
OS	SWITCH - CEILING MOUNTED OCCUPANCY SENSOR	IN CEILING
TV	TV OUTLET	18" AFF
	TELEPHONE OUTLET	18" AFF
	TELEPHONE OUTLET. SUBSCRIPT: F - FIREMAN'S PHONE, H - HOUSE PHONE, P - PAY PHONE	42" AFF OR 6" ABOVE COUNTER TOP
	TELEPHONE / DATA COMBINATION OUTLET	18" AFF
	TELEPHONE / DATA COMBINATION OUTLET	FLUSH WITH FINISHED FLOOR
	TELEPHONE / DATA COMBINATION OUTLET	42" AFF OR 6" ABOVE COUNTER TOP
	DATA OUTLET	18" AFF
	DATA OUTLET	42" AFF OR 6" ABOVE COUNTER TOP
	DISCONNECT SWITCH. SUBSCRIPT: AMP / # OF POLES / ENCLOSURE	AS INDICATED ON DWG
	FUSED DISCONNECT SWITCH. SUBSCRIPT: AMP / # OF POLES / ENCLOSURE / FUSE	AS INDICATED ON DWG
	ELECTRICAL PANELBOARD. REFER TO PANELBOARD SCHEDULE.	SURFACE MOUNTED ON WALL
	EQUIPMENT AS NOTED ON DRAWING.	SURFACE MOUNTED ON WALL
M	MOTOR	
XX-#	HOME RUN WITH WIRE TICKS. XX - PANEL DESIGNATION, # - CIRCUIT DESIGNATION. WIRE TICKS - (1) NEUTRAL, (3) HOT & (1) GROUND	
D / D	SMOKE DETECTOR. CEILING / WALL MOUNTED	
H / H	HEAT DETECTOR. CEILING/WALL MOUNTED	
	FIRE ALARM NOTIFICATION DEVICE. AUDIO AND VISUAL.	80" AFF
	FIRE ALARM NOTIFICATION DEVICE. AUDIO.	80" AFF
	FIRE ALARM NOTIFICATION DEVICE. VISUAL.	80" AFF
	FIRE ALARM INITIATION DEVICE. PULL STATION.	42" AFF

ABBREVIATIONS

AC	6" ABOVE COUNTER SPACE OR 42" AFF	IG	ISOLATED GROUND
AF	AMP FUSE	ISC	SHORT CIRCUIT CURRENT
AFF	ABOVE FINISHED FLOOR	LTG	LIGHTING
AL	ALUMINUM	MTD	MOUNTED
BFC	BELOW FINISHED CEILING	N	NEUTRAL
BKR	BREAKER	NL	NIGHT LIGHT
CND	CONDUIT	NEC	NATIONAL ELECTRICAL CODE
CONN	CONNECTED OR CONNECTION	PNL	PANEL
CTB	CABLE TV TERMINAL BACKBOARD	RECPT	RECEPTACLE
CU	COPPER	TEL	TELEPHONE
DN	DOWN	TTB	TELEPHONE TERMINAL BOARD
EC	EMPTY CONDUIT	TV	TELEVISION
ELEC	ELECTRICAL	TVSS	TRANSIENT VOLTAGE SURGE SUPPRESSOR
FACP	FIRE ALARM CONTROL PANEL	TYP	TYPICAL
FAA	FIRE ALARM ANNUNCIATOR PANEL	XFMR	TRANSFORMER
G OR GRND	GROUND	UG	UNDERGROUND
GFCI OR GF	GROUND FAULT CIRCUIT INTERRUPTER	WP	WEATHERPROOF

PROFICIENT ENGINEERING
6991 Peachtree Industrial Blvd Building 700
Peachtree Corners, Georgia 30092
404.330.9798
PROJECT # 123309

STROUD AND COMPANY
427 8th Street : Macon, Ga 31201
478-743-5097

ALL Architecture, LLC
2052 CHRYSLER DRIVE NE, ATLANTA, GA 30345
TELEPHONE: (404) 316-2896
E-MAIL: INFO@ALLARCHLLC.COM

REVISIONS
NO. | DATE

COPYRIGHT
THIS DRAWING AND ALL REPRODUCTIONS ARE COPYRIGHTED AND THE PROPERTY OF ALL ARCHITECTURE, LLC AND MAY NOT BE USED IN ANY WAY WITHOUT THEIR PERMISSION.

PROJECT TITLE:
HAMILTON DENTAL
222 CHAMBLESS LN,
HAMILTON, GA 31811

SEAL:
GEORGIA REGISTERED PROFESSIONAL ENGINEER No. 032847 BRIAN M. ARMENTA

DRAWN: AR	CHECKED: BA
APPROVED: BA	ISSUE DATE: 07/25/23

CAD FILE NAME: CAD FILE

SHEET TITLE: GENERAL

PROJECT NUMBER: 22016

SHEET NO: E-001

SHEET 1 OF 12

ISSUED FOR CONSTRUCTION

PLOT DATE: 12/11/2018 7:06:02 AM

GROUNDING AND BONDING DETAIL

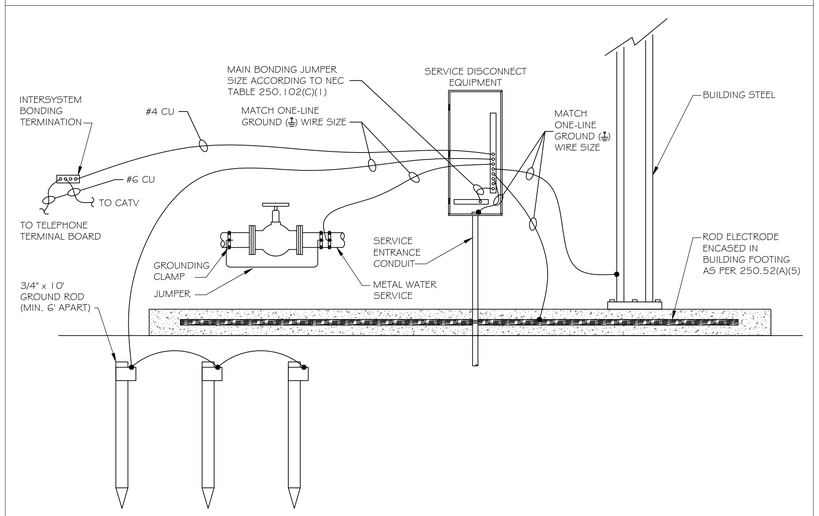

ONE-LINE DIAGRAM

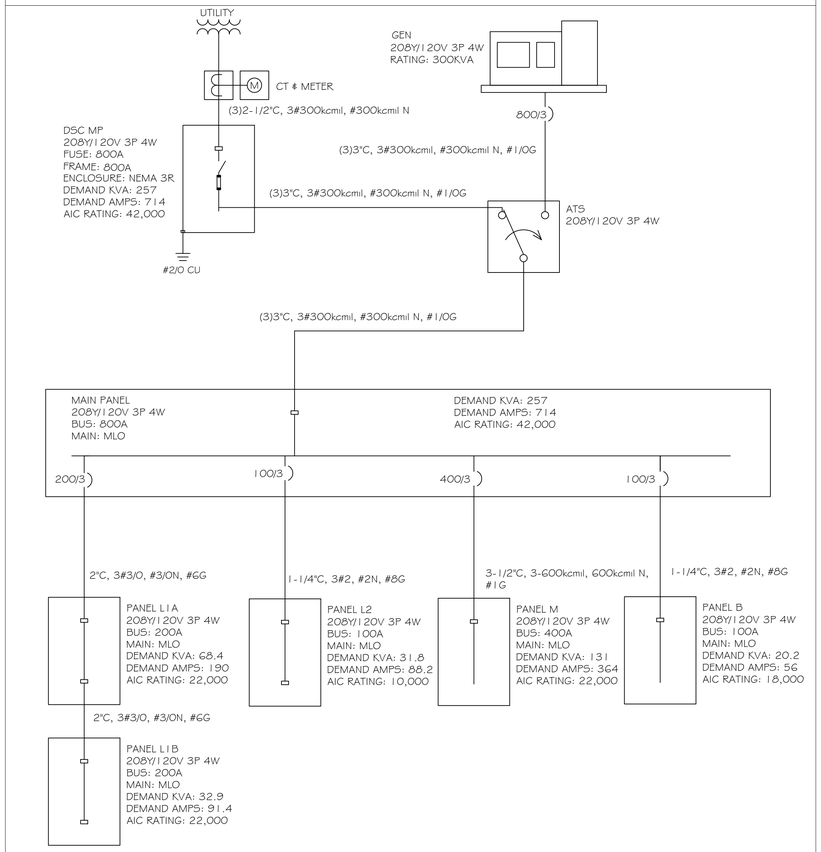

GENERAL SCHEDULE

CALLOUT	CUSTOM PANEL DESCRIPTION	SYMBOL	VOLTS	KVA	BREAKER	CIRCUIT	WIRE CALLOUT	DISCONNECT DESCRIPTION
EF-1	EXHAUST FAN		120V 1P 2W	0.15	20/1	L2-6	1/2"C,1#12,#12N,#12G	FACTORY DISCONNECT SWITCH/PLUG
EF-2	EXHAUST FAN		120V 1P 2W	0.05	20/1	L2-6	1/2"C,1#12,#12N,#12G	FACTORY DISCONNECT SWITCH/PLUG
EF-3	EXHAUST FAN		120V 1P 2W	0.1	20/1	B-9	1/2"C,1#12,#12N,#12G	FACTORY DISCONNECT SWITCH/PLUG
EF-4	EXHAUST FAN		120V 1P 2W	0.53	20/1	L1B-44	1/2"C,1#12,#12N,#12G	FACTORY DISCONNECT SWITCH/PLUG
EF-A	EXHAUST FAN		120V 1P 2W	0.1	20/1	L2-6	1/2"C,1#12,#12N,#12G	FACTORY DISCONNECT SWITCH/PLUG
EF-A	EXHAUST FAN		120V 1P 2W	0.1	20/1	L1A-5	1/2"C,1#12,#12N,#12G	FACTORY DISCONNECT SWITCH/PLUG
EF-A	EXHAUST FAN		120V 1P 2W	0.1	20/1	L1A-1	1/2"C,1#10,#10N,#10G	FACTORY DISCONNECT SWITCH/PLUG
EF-A	EXHAUST FAN		120V 1P 2W	0.1	20/1	L2-8	1/2"C,1#10,#10N,#10G	FACTORY DISCONNECT SWITCH/PLUG
EF-A	EXHAUST FAN		120V 1P 2W	0.1	20/1	L2-8	1/2"C,1#10,#10N,#10G	FACTORY DISCONNECT SWITCH/PLUG
EWH-1	ELECTRIC WALL HEATER		208/120V 2P 3W	3	20/2	L1A-31,33	1/2"C,2#12,#12N,#12G	FACTORY DISCONNECT SWITCH
EWH-2	ELECTRIC WALL HEATER		208/120V 2P 3W	4.8	30/2	B-1,3	1/2"C,2#10,#10N,#10G	FACTORY DISCONNECT SWITCH
EWH-3	ELECTRIC WALL HEATER		120V 1P 2W	1.5	20/1	B-5	1/2"C,1#12,#12N,#12G	FACTORY DISCONNECT SWITCH
FCU-1	FAN COIL UNIT		208/120V 2P 3W	15.66	80/2	M-2,4	1-1/4"C,2#2,#2N,#8G	100A/2P/NEMA 1
FCU-2	FAN COIL UNIT		208/120V 2P 3W	10.48	60/2	M-5,7	3/4"C,2#6,#6N,#10G	60A/2P/NEMA 1
FCU-3	FAN COIL UNIT		208/120V 2P 3W	10.48	60/2	M-9,11	3/4"C,2#6,#6N,#10G	60A/2P/NEMA 1
FCU-4	FAN COIL UNIT		208/120V 2P 3W	8.24	40/2	M-13,15	3/4"C,2#8,#8N,#10G	60A/2P/NEMA 1
HP-1	HEAT PUMP		208/120V 2P 3W	5.24	40/2	M-18,20	3/4"C,2#8,#8N,#10G	60A/2P/NEMA 3R
HP-2	HEAT PUMP		208/120V 2P 3W	4.06	30/2	M-6,8	1/2"C,2#10,#10N,#10G	30A/2P/NEMA 3R
HP-3	HEAT PUMP		208/120V 2P 3W	4.06	30/2	M-10,12	1/2"C,2#10,#10N,#10G	30A/2P/NEMA 3R
HP-4	HEAT PUMP		208/120V 2P 3W	2.95	25/2	M-14,16	1/2"C,2#10,#10N,#10G	30A/2P/NEMA 3R
MFCU-1	MINI FAN COIL UNIT		208/120V 2P 3W	1.87	15/2	B-6,8	1/2"C,2#12,#12N,#12G	30A/2P/NEMA 1
MHP-1	MINI HEAT PUMP		208/120V 2P 3W	1.87	15/2	B-6,8	1/2"C,2#12,#12N,#12G	30A/2P/NEMA 3R
RP-1	RECIRCULATION PUMP		120V 1P 2W	0.6	20/1	L1A-40	1/2"C,1#12,#12N,#12G	30A/1P/NEMA 1
RTU-1	ROOF TOP UNIT		208V 3P 4W	26.3	80/3	M-17,19,21	1-1/4"C,3#2,#2N,#8G	FACTORY DISCONNECT SWITCH
RTU-2	ROOF TOP UNIT		208V 3P 4W	14.77	45/3	M-23,25,27	1"C,3#6,#6N,#10G	FACTORY DISCONNECT SWITCH
RTU-3	ROOF TOP UNIT		208V 3P 4W	23.78	70/3	M-22,24,26	1-1/4"C,3#4,#4N,#8G	FACTORY DISCONNECT SWITCH
RTU-4	ROOF TOP UNIT		208V 3P 4W	14.77	45/3	M-29,31,33	1"C,3#6,#6N,#10G	FACTORY DISCONNECT SWITCH
WH-1	ELECTRIC WATER HEATER		208V 3P 4W	12	50/3	MAIN-8,10,12	1"C,3#6,#6N,#10G	60A/3P/NEMA 1

Panel **MAIN**

ROOM
MOUNTING SURFACE
FED FROM ATS
NOTE

VOLTS 208Y/120V 3P 4W
BUS AMPS 800
NEUTRAL 100%

AIC 42,000
MAIN BKR MLO
LUGS STANDARD

CKT #	CKT BKR	LOAD KVA	CIRCUIT DESCRIPTION		CKT #	CKT BKR	LOAD KVA	CIRCUIT DESCRIPTION
1	200/3	108.4	PANEL L1A	a	2	100/3	36.1	PANEL L2
3	|			b	4	|		
5	|			c	6	|		
7	400/3	140.8	PANEL M	a	8	50/3	12.0	ELECTRIC WATER HEATER
9	|			b	10	|		
11	|			c	12	|		
13	20/1	0.0	SPACE	a	14	100/3	18.4	PANEL B
15	20/1	0.0	SPACE	b	16	|		
17	20/1	0.0	SPACE	c	18	|		
19	20/1	0.0	SPACE	a	20	20/1	0.0	SPACE
21	20/1	0.0	SPACE	b	22	20/1	0.0	SPACE
23	20/1	0.0	SPACE	c	24	20/1	0.0	SPACE

	CONN KVA	CALC KVA	
LIGHTING	12.2	15.3	(125%)
LARGEST MOTOR	26.3	6.6	(25%)
MOTORS	1.9	1.9	(100%)
RECEPTACLES	123.8	66.9	(50%>10)

	CONN KVA	CALC KVA	
KITCHEN EQUIPMENT	2.4	2.4	(100%)
CONTINUOUS	21.3	26.6	(125%)
NONCONTINUOUS	9.5	9.5	(100%)
HEATING	128.2	128.2	(100%)
COOLING	95.9	0.0	(0%)
DEMAND TOTAL LOAD		257.4	KVA
DEMAND BALANCED 3-PHASE LOAD		714.5	A
PHASE A		104%	
PHASE B		104%	
PHASE C		92%	

PROFICIENT ENGINEERING
6991 Peachtree Industrial Blvd Building 700
Peachtree Corners, Georgia 30092
404.330.9798
PROJECT # 123309

STROUD AND COMPANY
427 8th Street : Macon, Ga 31201
478-743-5997

ALL Architecture, LLC
2052 CHRYSLER DRIVE NE, ATLANTA, GA 30345
TELEPHONE: (404) 316-2896
E-MAIL: INFO@ALLARCHLLC.COM

REVISIONS

NO.	DATE

COPYRIGHT
THIS DRAWING AND ALL REPRODUCTIONS ARE COPYRIGHTED AND THE PROPERTY OF ALL ARCHITECTURE, LLC AND MAY NOT BE USED IN ANY WAY WITHOUT THEIR PERMISSION.

PROJECT TITLE:
HAMILTON DENTAL
222 CHAMBLESS LN,
HAMILTON, GA 31811

SEAL:
GEORGIA REGISTERED No. 032547 PROFESSIONAL ENGINEER BRIAN M. ARMENTA

DRAWN: AR	CHECKED: BA
APPROVED: BA	ISSUE DATE: 07/25/23

CAD FILE NAME: CAD FILE

SHEET TITLE: **ONE-LINE DIAGRAM AND SCHEDULES**

PROJECT NUMBER: 22016

SHEET NO: **E-002**

SHEET 2 OF 12

ISSUED FOR CONSTRUCTION

PLOT DATE: 12/11/2018 7:06:02 AM

L1A

ROOM
MOUNTING SURFACE
FED FROM MAIN
NOTE

VOLTS 208Y/120V 3P 4W
BUS AMPS 200
NEUTRAL 100%

AIC 22,000
MAIN BKR MLO
LUGS FEEDTHRU

CKT #	CKT BKR	CIRCUIT DESCRIPTION	LOAD KVA A	LOAD KVA B	LOAD KVA C	CKT #	CKT BKR	CIRCUIT DESCRIPTION	LOAD KVA A	LOAD KVA B	LOAD KVA C
1	20/1	EXHAUST FAN, LIGHTING	0.9			2	20/1	WATER COOLER	0.6		
3	20/1	LIGHTING		1.6		4	20/1	WATER COOLER		0.6	
5	20/1	EXHAUST FAN, LIGHTING			0.7	6	20/1	PRINTER			1.0
7	20/1	CABINET UTILITY CENTER	1.5			8	20/1	HAND PIECE	1.2		
9	20/1	DENTAL CHAIR		1.5		10	20/2	WASHER DISINFECTOR		1.9	
11	20/1	RECEPTACLE			0.5	12	|				1.9
13	20/1	X-RAY EQUIPMENT	1.5			14	20/1	STERILIZER (SINGLE CASSETE)	1.5		
15	20/1	CABINET UTILITY CENTER		1.5		16	20/1	STERILIZER (SINGLE CASSETE)		1.5	
17	20/1	DENTAL CHAIR			1.5	18	20/1	ULTRASONIC CLEANER			1.2
19	20/1	RECEPTACLE	0.5			20	20/1	SINTERING FURNACE	0.4		
21	20/1	X-RAY EQUIPMENT		1.5		22	25/1	MONUMENT SIGN		2.0	
23	20/1	CABINET UTILITY CENTER			1.5	24	20/1	RECEPTACLE			0.9
25	20/1	DENTAL CHAIR	1.5			26	20/1	RECEPTACLE	1.1		
27	20/1	RECEPTACLE		0.5		28	20/1	RECEPTACLE		1.1	
29	20/1	X-RAY EQUIPMENT			1.5	30	20/1	CABINET UTILITY CENTER			1.5
31	20/2	ELECTRIC WALL HEATER	1.5			32	20/1	DENTAL CHAIR	1.5		
33	|			1.5		34	20/1	RECEPTACLE		0.5	
35	20/1	ROAD SIGN			1.2	36	20/1	X-RAY EQUIPMENT			1.5
37	20/1	LIGHTING	1.1			38	20/1	SINTERING FURNACE	0.4		
39	20/1	RECEPTACLE		1.6		40	20/1	RECIRCULATION PUMP		0.6	
41	20/1	SINTERING FURNACE			0.4	42	20/1	RECEPTACLE			0.4
43	20/1	LAB DUST COLLECTOR	0.4			44	20/1	RECEPTACLE	0.2		
45	20/1	PRINTER		1.0		46	20/1	CAD/CAM MILL		1.2	
47	20/1	RECEPTACLE			0.5	48	20/1	CAD/CAM MILL			1.2
								TOTAL CONNECTED KVA BY PHASE	34.2	40.0	34.2
		LUG LOAD: PANEL L1B	18.5	19.8	16.8			TOTAL CONNECTED AMPS BY PHASE	285.0	333.5	284.8

	CONN KVA	CALC KVA			CONN KVA	CALC KVA	
LIGHTING	7.3	9.2	(125%)	RECEPTACLES	9.5	5.8	(50%>10)
LARGEST MOTOR	0.6	0.2	(25%)	CONTINUOUS	3.0	3.8	(125%)
MOTORS	1.3	1.3	(100%)	NONCONTINUOUS	1.2	1.2	(100%)
				DEMAND TOTAL LOAD		68.4 KVA	
				DEMAND BALANCED 3-PHASE LOAD		189.7 A	

L1B

ROOM
MOUNTING SURFACE
FED FROM L1A
NOTE

VOLTS 208Y/120V 3P 4W
BUS AMPS 200
NEUTRAL 100%

AIC 22,000
MAIN BKR MLO
LUGS FEEDTHRU

CKT #	CKT BKR	CIRCUIT DESCRIPTION	LOAD KVA A	LOAD KVA B	LOAD KVA C	CKT #	CKT BKR	CIRCUIT DESCRIPTION	LOAD KVA A	LOAD KVA B	LOAD KVA C
1	20/1	RECEPTACLE	0.9			2	20/1	SIGN	1.2		
3	20/1	RECEPTACLE		1.1		4	20/1	CABINET UTILITY CENTER		1.5	
5	20/1	RECEPTACLE			0.4	6	20/1	DENTAL CHAIR			1.5
7	20/1	CABINET UTILITY CENTER	1.5			8	20/1	RECEPTACLE	0.5		
9	20/1	DENTAL CHAIR		1.5		10	20/1	X-RAY EQUIPMENT		1.5	
11	20/1	RECEPTACLE			0.7	12	20/1	CABINET UTILITY CENTER			1.5
13	20/1	X-RAY EQUIPMENT	1.5			14	20/1	DENTAL CHAIR	1.5		
15	20/1	PRINTER		1.0		16	20/1	RECEPTACLE		0.7	
17	20/1	CABINET UTILITY CENTER			1.5	18	20/1	X-RAY EQUIPMENT			1.5
19	20/1	DENTAL CHAIR	1.5			20	20/1	CABINET UTILITY CENTER	1.5		
21	20/1	RECEPTACLE		0.5		22	20/1	DENTAL CHAIR		1.5	
23	20/1	X-RAY EQUIPMENT			1.5	24	20/1	RECEPTACLE			0.5
25	20/1	CABINET UTILITY CENTER	1.5			26	20/1	X-RAY EQUIPMENT	1.5		
27	20/1	DENTAL CHAIR		1.5		28	20/1	CABINET UTILITY CENTER		1.5	
29	20/1	RECEPTACLE			0.5	30	20/1	DENTAL CHAIR			1.5
31	20/1	X-RAY EQUIPMENT	1.5			32	20/1	RECEPTACLE	0.5		
33	20/1	CABINET UTILITY CENTER		1.5		34	20/1	X-RAY EQUIPMENT		1.5	
35	20/1	DENTAL CHAIR			1.5	36	20/1	CABINET UTILITY CENTER			1.5
37	20/1	RECEPTACLE	0.5			38	20/1	DENTAL CHAIR	1.5		
39	20/1	X-RAY EQUIPMENT		1.5		40	20/1	RECEPTACLE		0.5	
41	20/2	PANORAMIC IMAGING EQUIPMENT			0.8	42	20/1	X-RAY EQUIPMENT			1.5
43	|		0.8			44	20/1	EXHAUST FAN	0.5		
45	20/1	STERILIZER(AUTOCLAVE)		1.2		46	20/1	STERILIZER(AUTOCLAVE)		1.2	
47	20/1	SPACE			0.0	48	20/1	LAB DUST COLLECTOR			0.4
								TOTAL CONNECTED KVA BY PHASE	18.5	19.8	16.8
								TOTAL CONNECTED AMPS BY PHASE	154.2	164.8	139.8

	CONN KVA	CALC KVA			CONN KVA	CALC KVA	
LARGEST MOTOR	0.5	0.1	(25%)	MOTORS	0.5	0.5	(100%)
				RECEPTACLES	5.5	2.3	(50%>10)
				DEMAND TOTAL LOAD		2.9 KVA	
				DEMAND BALANCED 3-PHASE LOAD		91.4 A	

M

ROOM
MOUNTING SURFACE
FED FROM MAIN
NOTE

VOLTS 208Y/120V 3P 4W
BUS AMPS 400
NEUTRAL 100%

AIC 22,000
MAIN BKR MLO
LUGS STANDARD

CKT #	CKT BKR	CIRCUIT DESCRIPTION	LOAD KVA A	LOAD KVA B	LOAD KVA C	CKT #	CKT BKR	CIRCUIT DESCRIPTION	LOAD KVA A	LOAD KVA B	LOAD KVA C
1	20/1	SPACE	0.0			2	80/2	FAN COIL UNIT	7.8		
3	20/1	SPACE		0.0		4	|			7.8	
5	60/2	FAN COIL UNIT			5.2	6	30/2	HEAT PUMP			2.0
7	|		5.2			8	|		2.0		
9	60/2	FAN COIL UNIT		5.2		10	30/2	HEAT PUMP		2.0	
11	|				5.2	12	|				2.0
13	40/2	FAN COIL UNIT	4.1			14	25/2	HEAT PUMP	1.5		
15	|			4.1		16	|			1.5	
17	80/3	ROOF TOP UNIT			8.8	18	40/2	HEAT PUMP			2.6
19	|		8.8			20	|		2.6		
21	|			8.8		22	70/3	ROOF TOP UNIT		7.9	
23	45/3	ROOF TOP UNIT			4.9	24	|				7.9
25	|		4.9			26	|		7.9		
27	|			4.9		28	20/1	SPACE		0.0	
29	45/3	ROOF TOP UNIT			4.9	30	20/1	SPACE			0.0
31	|		4.9			32	20/1	SPACE	0.0		
33	|			4.9		34	20/1	SPACE		0.0	
35	20/1	SPACE			0.0	36	20/1	SPACE			0.0
37	20/1	SPACE	0.0			38	20/1	SPACE	0.0		
39	20/1	SPACE		0.0		40	20/1	SPACE		0.0	
41	20/1	SPACE			0.0	42	20/1	SPACE			0.0
								TOTAL CONNECTED KVA BY PHASE	49.9	47.2	43.7
								TOTAL CONNECTED AMPS BY PHASE	415.5	394.5	364.1

	CONN KVA	CALC KVA			CALC KVA
LARGEST MOTOR	26.3	6.6	(25%)	DEMAND TOTAL LOAD	131.1 KVA
HEATING	124.5	124.5	(100%)	DEMAND BALANCED 3-PHASE LOAD	363.8 A
COOLING	95.9	0.0	(0%)		

L2

ROOM
MOUNTING SURFACE
FED FROM MAIN
NOTE

VOLTS 208Y/120V 3P 4W
BUS AMPS 100
NEUTRAL 100%

AIC 10,000
MAIN BKR MLO
LUGS FEEDTHRU

CKT #	CKT BKR	CIRCUIT DESCRIPTION	LOAD KVA A	LOAD KVA B	LOAD KVA C	CKT #	CKT BKR	CIRCUIT DESCRIPTION	LOAD KVA A	LOAD KVA B	LOAD KVA C
1	25/2	DRYER	2.6			2	20/1	LIGHTING	1.0		
3	|			2.6		4	20/1	LIGHTING		0.9	
5	20/1	WASHER			1.0	6	20/1	EXHAUST FAN, LIGHTING			1.0
7	20/1	TEL BACKBOARD	1.0			8	20/1	EXHAUST FAN, LIGHTING	1.8		
9	20/1	DATA RACK		1.0		10	20/1	REFRIGERATOR		1.2	
11	20/1	REFRIGERATOR			1.2	12	20/1	FACP			0.1
13	20/1	BREWER COFFEE	1.5			14	20/1	RECEPTACLE	0.7		
15	20/1	SPACE		0.0		16	20/1	RECEPTACLE		1.3	
17	20/1	RECEPTACLE			0.7	18	20/1	RECEPTACLE			1.3
19	20/1	RECEPTACLE	0.9			20	20/1	RECEPTACLE	1.1		
21	20/1	RECEPTACLE		1.1		22	20/1	RECEPTACLE		1.1	
23	20/1	RECEPTACLE			1.3	24	20/1	RECEPTACLE			0.7
25	20/1	RECEPTACLE	0.9			26	20/1	SINTERING FURNACE	0.4		
27	20/1	RECEPTACLE		1.4		28	20/1	SINTERING FURNACE		0.4	
29	20/1	RECEPTACLE			0.7	30	20/1	SINTERING FURNACE			0.4
31	20/1	RECEPTACLE	0.4			32	20/1	RECEPTACLE	0.5		
33	20/1	PRINTER		1.0		34	20/2	220V CAD/CAM MILL		0.6	
35	20/1	LAB DUST COLLECTOR			0.4	36	|				0.6
37	20/1	SPACE	0.0			38	20/1	RECEPTACLE	0.2		
39	20/2	220V CAD/CAM MILL		0.6		40	20/1	RECEPTACLE		0.2	
41	|				0.6	42	20/1	SPACE			0.0
43	20/1	SPACE	0.0			44	20/1	SPACE	0.0		
45	20/1	SPACE		0.0		46	20/1	SPACE		0.0	
47	20/1	SPACE			0.0	48	20/1	SPACE			0.0
								TOTAL CONNECTED KVA BY PHASE	12.9	13.3	9.9
								TOTAL CONNECTED AMPS BY PHASE	108.5	110.8	82.4

	CONN KVA	CALC KVA			CONN KVA	CALC KVA	
LIGHTING	4.1	5.2	(125%)	DEMAND RECEPTACLES	20.7	15.4	(50%>10)
LARGEST MOTOR	0.2	0.0	(25%)	DEMAND KITCHEN EQUIPMENT	2.4	2.4	(100%)
MOTORS	0.5	0.5	(100%)	NONCONTINUOUS	8.3	8.3	(100%)
				TOTAL LOAD		31.8	
				BALANCED 3-PHASE LOAD		88.2 A	

PROFICIENT ENGINEERING
6991 Peachtree Industrial Blvd Building 700
Peachtree Corners, Georgia 30092
404.330.9798
PROJECT # 123309

STROUD AND COMPANY
427 8th Street : Macon, Ga 31201
478-743-5097

ALL Architecture, LLC
2052 CHRYSLER DRIVE NE, ATLANTA, GA 30345
TELEPHONE: (404) 316-2896
E-MAIL: INFO@ALLARCHLLC.COM

REVISIONS

NO.	DATE

COPYRIGHT
THIS DRAWING AND ALL REPRODUCTIONS ARE COPYRIGHTED AND THE PROPERTY OF ALL ARCHITECTURE, LLC AND MAY NOT BE USED IN ANY WAY WITHOUT THEIR PERMISSION.

PROJECT TITLE:
HAMILTON DENTAL
222 CHAMBLESS LN,
HAMILTON, GA 31811

SEAL:
GEORGIA REGISTERED No. 032547 PROFESSIONAL ENGINEER BRIAN M. ARMENTA

DRAWN: AR	CHECKED: BA
APPROVED: BA	ISSUE DATE: 07/25/23

CAD FILE NAME: CAD FILE

SHEET TITLE: **SCHEDULES**

PROJECT NUMBER: 22016

SHEET NO: E-003

SHEET 3 OF 12

ISSUED FOR CONSTRUCTION

PLOT DATE: 12/11/2018 7:06:02 AM

COM*check* Software Version 4.1.5.5

Interior Lighting Compliance Certificate

Project Information

Energy Code: 2015 IECC
Project Title: HAMILTON DENTAL
Project Type: New Construction

Construction Site:
222 CHAMBLESS LN,
HAMILTON, GA 31811

Owner/Agent:

Designer/Contractor:
ALL ARCHITECTURE,LLC
2052 CHRYSLER DRIVE NE,
ATLANTA, GA 30345
478-316-2896

Additional Efficiency Package(s)

Credits: 1.0 Required 1.0 Proposed
Reduced Lighting Power, 1.0 credit

Allowed Interior Lighting Power

A Area Category	B Floor Area (ft2)	C Allowed Watts / ft2	D Allowed Watts (B X C)
1-Health Care-Clinic	11780	0.81	9542
		Total Allowed Watts =	9542

Proposed Interior Lighting Power

A Fixture ID : Description / Lamp / Wattage Per Lamp / Ballast	B Lamps/ Fixture	C # of Fixtures	D Fixture Watt.	E (C X D)
1-Health Care-Clinic				
LED: A: 2x4 LED RECESSED LIGHT: Other:	1	149	47	6940
LED: B2: 2x2 LED RECESSED TROFFER: Other:	1	3	29	86
LED: C: 6" LED RECESSED DOWNLIGHT: Other:	1	17	20	348
LED: G: 4' LED STRIP LIGHT WITH FROSTED: Other:	1	21	42	882
			Total Proposed Watts =	8257

Interior Lighting PASSES: Design 13% better than code

Interior Lighting Compliance Statement

Compliance Statement: The proposed interior lighting design represented in this document is consistent with the building plans, specifications, and other calculations submitted with this permit application. The proposed interior lighting systems have been designed to meet the 2015 IECC requirements in COM*check* Version 4.1.5.5 and to comply with any applicable mandatory requirements listed in the Inspection Checklist.

Brian M. Armenta -PE — Name - Title
Signature
06/25/2023 — Date

COM*check* Software Version 4.1.5.5

Inspection Checklist

Energy Code: 2015 IECC

Requirements: 100.0% were addressed directly in the COM*check* software

Text in the "Comments/Assumptions" column is provided by the user in the COMcheck Requirements screen. For each requirement, the user certifies that a code requirement will be met and how that is documented, or that an exception is being claimed. Where compliance is itemized in a separate table, a reference to that table is provided.

Section # & Req.ID	Plan Review	Complies?	Comments/Assumptions
C103.2 [PR4][1]	Plans, specifications, and/or calculations provide all information with which compliance can be determined for the interior lighting and electrical systems and equipment and document where exceptions to the standard are claimed. Information provided should include interior lighting power calculations, wattage of bulbs and ballasts, transformers and control devices.	☐Complies ☐Does Not ☐Not Observable ☐Not Applicable	Requirement will be met.
C406 [PR9][1]	Plans, specifications, and/or calculations provide all information with which compliance can be determined for the additional energy efficiency package options.	☐Complies ☐Does Not ☐Not Observable ☐Not Applicable	Requirement will be met.

Additional Comments/Assumptions:

1 High Impact (Tier 1) | 2 Medium Impact (Tier 2) | 3 Low Impact (Tier 3)

Section # & Req.ID	Rough-In Electrical Inspection	Complies?	Comments/Assumptions
C405.2.1 [EL15][1]	Lighting controls installed to uniformly reduce the lighting load by at least 50%.	☐Complies ☐Does Not ☐Not Observable ☐Not Applicable	Requirement will be met.
C405.2.1 [EL18][1]	Occupancy sensors installed in required spaces.	☐Complies ☐Does Not ☐Not Observable ☐Not Applicable	Requirement will be met.
C405.2.1, C405.2.2.3 [EL23][2]	Independent lighting controls installed per approved lighting plans and all manual controls readily accessible and visible to occupants.	☐Complies ☐Does Not ☐Not Observable ☐Not Applicable	Requirement will be met.
C405.2.2.1 [EL22][2]	Automatic controls to shut off all building lighting installed in all buildings.	☐Complies ☐Does Not ☐Not Observable ☐Not Applicable	Requirement will be met.
C405.2.3 [EL16][2]	Daylight zones provided with individual controls that control the lights independent of general area lighting.	☐Complies ☐Does Not ☐Not Observable ☐Not Applicable	**Exception:** Requirement does not apply.
C405.2.3, C405.2.3.1, C405.2.3.2 [EL20][1]	Primary sidelighted areas are equipped with required lighting controls.	☐Complies ☐Does Not ☐Not Observable ☐Not Applicable	**Exception:** Requirement does not apply.
C405.2.3, C405.2.3.1, C405.2.3.3 [EL21][1]	Enclosed spaces with daylight area under skylights and rooftop monitors are equipped with required lighting controls.	☐Complies ☐Does Not ☐Not Observable ☐Not Applicable	**Exception:** Requirement does not apply.
C405.2.4 [EL4][1]	Separate lighting control devices for specific uses installed per approved lighting plans.	☐Complies ☐Does Not ☐Not Observable ☐Not Applicable	Requirement will be met.
C405.2.4 [EL8][1]	Additional interior lighting power allowed for special functions per the approved lighting plans and is automatically controlled and separated from general lighting.	☐Complies ☐Does Not ☐Not Observable ☐Not Applicable	Requirement will be met.
C405.3 [EL6][1]	Exit signs do not exceed 5 watts per face.	☐Complies ☐Does Not ☐Not Observable ☐Not Applicable	Requirement will be met.

Additional Comments/Assumptions:

1 High Impact (Tier 1) | 2 Medium Impact (Tier 2) | 3 Low Impact (Tier 3)

Section # & Req.ID	Final Inspection	Complies?	Comments/Assumptions
C303.3, C408.2.5.2 [FI17][3]	Furnished O&M instructions for systems and equipment to the building owner or designated representative.	☐Complies ☐Does Not ☐Not Observable ☐Not Applicable	Requirement will be met.
C405.4.1 [FI18][1]	Interior installed lamp and fixture lighting power is consistent with what is shown on the approved lighting plans, demonstrating proposed watts are less than or equal to allowed watts.	☐Complies ☐Does Not ☐Not Observable ☐Not Applicable	*See the Interior Lighting fixture schedule for values.*
C408.2.5.1 [FI16][3]	Furnished as-built drawings for electric power systems within 90 days of system acceptance.	☐Complies ☐Does Not ☐Not Observable ☐Not Applicable	Requirement will be met.
C408.3 [FI33][1]	Lighting systems have been tested to ensure proper calibration, adjustment, programming, and operation.	☐Complies ☐Does Not ☐Not Observable ☐Not Applicable	Requirement will be met.

Additional Comments/Assumptions:

1 High Impact (Tier 1) | 2 Medium Impact (Tier 2) | 3 Low Impact (Tier 3)

PROFICIENT ENGINEERING
6991 Peachtree Industrial Blvd Building 700
Peachtree Corners, Georgia 30092
404.330.9798
PROJECT # 123309

STROUD AND COMPANY
427 8th Street : Macon, Ga 31201
478-743-5097

ALL Architecture, LLC
2052 CHRYSLER DRIVE NE, ATLANTA, GA 30345
TELEPHONE: (404) 316-2896
E-MAIL: INFO@ALLARCHLLC.COM

REVISIONS

NO.	DATE

COPYRIGHT
THIS DRAWING AND ALL REPRODUCTIONS ARE COPYRIGHTED AND THE PROPERTY OF ALL ARCHITECTURE, LLC AND MAY NOT BE USED IN ANY WAY WITHOUT THEIR PERMISSION.

PROJECT TITLE:
HAMILTON DENTAL
222 CHAMBLESS LN,
HAMILTON, GA 31811

SEAL:
GEORGIA REGISTERED No. 032547 PROFESSIONAL ENGINEER BRIAN M. ARMENTA

DRAWN: AR	CHECKED: BA
APPROVED: BA	ISSUE DATE: 07/25/23

CAD FILE NAME: CAD FILE

SHEET TITLE:
COMPLIANCE REPORT

PROJECT NUMBER: 22016

SHEET NO:
E-004

SHEET 4 OF 12

ISSUED FOR CONSTRUCTION

PLOT DATE: 12/11/2018 7:06:02 AM

FAULT CURRENT SCHEDULE

DEVICE	FAULT	AIC RATING	L-N VOLTS	UTILITY			FED FROM			
				FAULT	X	R	DEVICE	FAULT	X	R
DSC MP	34,482	42,000	120V	33,432	0.003392	0.001174	UTILITY	41,659	0.002825	0.0005649
MAIN	29,734	42,000	120V	28,672	0.002854	0.003062	ATS	40,559	0.002017	0.002164
B	9,548	18,000	120V	9,436	0.004907	0.011173	MAIN	28,672	0.002854	0.003062
L1A	19,070	22,000	120V	18,663	0.003951	0.005073	MAIN	28,672	0.002854	0.003062
L1B	16,301	22,000	120V	15,998	0.004469	0.006024	L1A	18,663	0.003951	0.005073
L2	5,853	10,000	120V	5,807	0.006754	0.01953	MAIN	28,672	0.002854	0.003062
M	18,610	22,000	120V	17,539	0.005201	0.004446	MAIN	28,672	0.002854	0.003062

B

ROOM
MOUNTING SURFACE
FED FROM MAIN
NOTE

VOLTS 208Y/120V 3P 4W
BUS AMPS 100
NEUTRAL 100%

AIC 18,000
MAIN BKR MLO
LUGS STANDARD

CKT #	CKT BKR	CIRCUIT DESCRIPTION	LOAD KVA A	LOAD KVA B	LOAD KVA C	CKT #	CKT BKR	CIRCUIT DESCRIPTION	LOAD KVA A	LOAD KVA B	LOAD KVA C
1	30/2	ELECTRIC WALL HEATER	2.4			2	20/1	RECEPTACLE	1.1		
3	|			2.4		4	20/1	LIGHTING		0.8	
5	20/1	ELECTRIC WALL HEATER			1.5	6	15/2	MINI FAN COIL UNIT, MINI HEAT PUMP			1.9
7	20/1	RECEPTACLE	1.1			8	|		1.9		
9	20/1	EXHAUST FAN		0.1		10	30/2	VACCUM PUMP(DRY)		0.6	
11	20/1	RECEPTACLE			0.2	12	|				0.6
13	20/2	DENTAL AIR COMPRESSOR	0.6			14	20/2	SURGICAL VACCUM PUMP	0.6		
15	|			0.6		16	|			0.6	
17	20/2	DENTAL AIR COMPRESSOR			0.6	18	20/1	REMOTE WATER CONTROL			0.4
19	|		0.6			20	20/1	SPACE	0.0		
21	20/1	SPACE		0.0		22	20/1	SPACE		0.0	
23	20/1	SPACE			0.0	24	20/1	SPACE			0.0
								TOTAL CONNECTED KVA BY PHASE	8.2	5.1	5.1
								TOTAL CONNECTED AMPS BY PHASE	68.8	44.5	43.5

	CONN KVA	CALC KVA			CONN KVA	CALC KVA	
LIGHTING	0.8	0.9	(125%)	RECEPTACLES	7.5	7.5	(50%>10)
LARGEST MOTOR	0.1	0.0	(25%)	CONTINUOUS	6.3	7.9	(125%)
MOTORS	0.1	0.1	(100%)	HEATING	3.7	3.7	(100%)
				TOTAL LOAD		20.2	
				BALANCED 3-PHASE LOAD		56.0 A	

GENERAL NOTES

REFER TO ARCHITECTURAL REFLECTED CEILING PLAN FOR EXACT LOCATIONS OF ALL CEILING MOUNTED DEVICES.

ALL RECEPTACLES SHALL BE GROUNDED AS REQUIRED BY ARTICLE 250-146.

PROVIDE UNSWITCHED HOT LEG OF CIRCUIT TO EMERGENCY LIGHTING AND EXIT SIGNS.

REFER HENRY SCHEIN DENTAL DRAWINGS FOR ANY AND ALL ELECTRICAL REQUIREMENTS AND INFORMATION. CONTRACTOR TO INSTALL ANY AND ALL ADDITIONAL ELECTRICAL AS DESCRIBED AND DIRECTED BY THE HENRY SCHEIN DENTAL DRAWINGS AND OR OWNER/ARCHITECT. COORDINATE EXACT LOCATIONS PRIOR TO ROUGH-IN.

FOLLOW MANUFACTURERS TEMPLATES FOR EXACT REQUIREMENTS FOR ANY EQUIPMENT SUPPLIED BY HENRY SCHEIN DENTAL. CONSULT WITH HENRY SCHEIN DENTAL REP FOR ADDITIONAL INFORMATION.

GFCI PROTECTION OR REDUNDANT GROUND IN DENTAL CHAIR RECEPTACLES, DENTAL UTILITY CABINETS AND ANY OTHER AREAS REQUIRED BY LOCAL CODE IS THE RESPONSIBILITY OF THE ELECTRICAL CONTRACTOR.

ALL CONDUIT LOCATIONS SHOULD BE VERIFIED WITH OWNER AND HENRY SCHEIN REP PRIOP TO ROUGH-IN.

KEYNOTES

1. FIELD COORDINATE EXACT LOCATION OF ELECTRICAL DISTRIBUTION EQUIPMENT WITH ARCHITECT PRIOR TO ROUGH-IN.
2. EXHAUST FAN NEEDS TO BE CONTROLLED WITH THERMOSTAT.

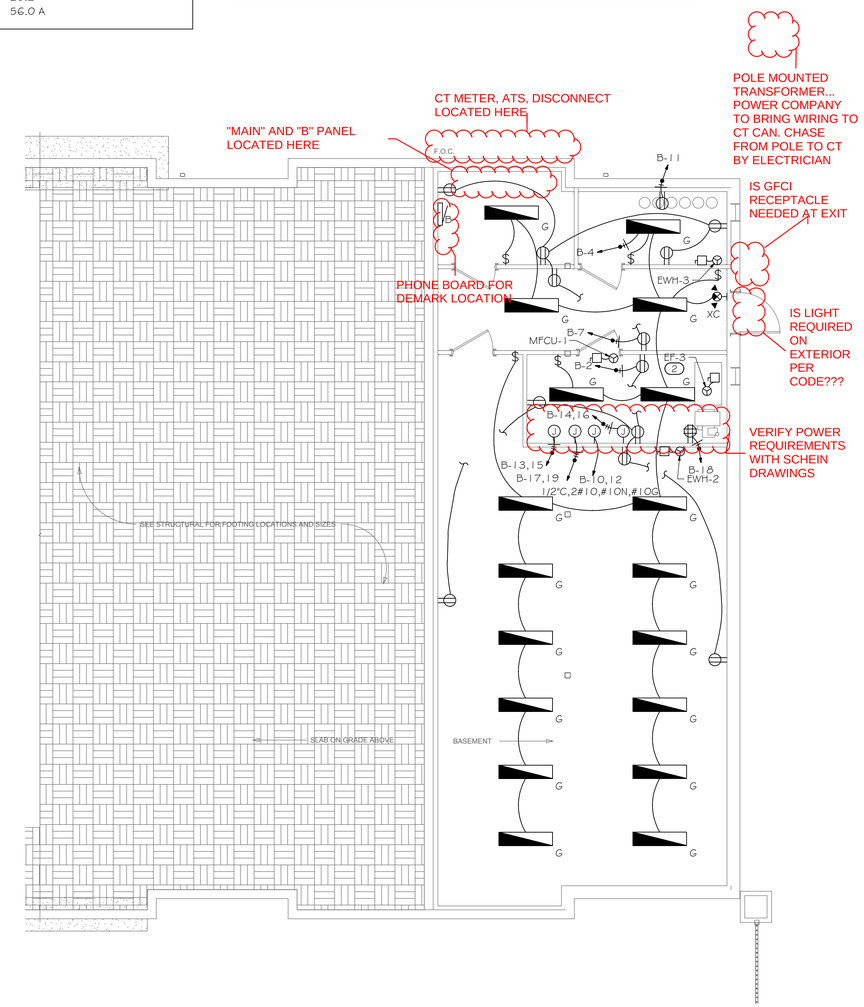

1 / E-100 BASEMENT FLOOR PLAN - ELECTRICAL
3/16" = 1'-0"

PROFICIENT ENGINEERING
6991 Peachtree Industrial Blvd Building 700
Peachtree Corners, Georgia 30092
404.330.9798
PROJECT # 123309

STROUD AND COMPANY
427 8th Street : Macon, Ga 31201
478-743-5997

ALL Architecture, LLC
2052 CHRYSLER DRIVE NE, ATLANTA, GA 30345
TELEPHONE: (404) 316-2896
E-MAIL: INFO@ALLARCHLLC.COM

REVISIONS

NO.	DATE

COPYRIGHT
THIS DRAWING AND ALL REPRODUCTIONS ARE COPYRIGHTED AND THE PROPERTY OF ALL ARCHITECTURE, LLC AND MAY NOT BE USED IN ANY WAY WITHOUT THEIR PERMISSION.

PROJECT TITLE:
HAMILTON DENTAL
222 CHAMBLESS LN,
HAMILTON, GA 31811

SEAL:
GEORGIA REGISTERED No. 032547 PROFESSIONAL ENGINEER BRIAN M. ARMENTA

DRAWN: AR	CHECKED: BA
APPROVED: BA	ISSUE DATE: 07/25/23

CAD FILE NAME: CAD FILE

SHEET TITLE:
BASEMENT FLOOR PLAN - ELECTRICAL

PROJECT NUMBER: 22016

SHEET NO:
E-100

SHEET 9 OF 12

ISSUED FOR CONSTRUCTION

PLOT DATE: 12/11/2018 7:06:02 AM

KEYNOTES

(9) X-RAY MASTER CONTROL-SUPPLIED AND INSTALLED BY HENRY SCHEIN DENTAL. ELECTRICIAN TO SUPPLY AND INSTALL PIPE CHASE WITH PULL STRING TO X-RAY HEAD LOCATION WHEN X-RAY MASTER CONTROL IS REMOTE. VERIFY SUPPLIER OF WIRING WITH HENRY SCHEIN DENTAL EQUIPMENT SPECIALIST.

(10) X-RAY REMOTE EXPOSURE BUTTON-SUPPLIED AND INSTALLED BY HENRY SCHEIN DENTAL. ELECTRICIAN TO SUPPLY AND INSTALL PIPE CHASE WITH PULL STRING TO X-RAY MASTER CONTROL OR PANORAMIC IMAGING UNIT LOCATION. VERIFY SUPPLIER OF EXPOSURE BUTTON AND WIRING WITH HENRY SCHEIN DENTAL EQUIPMENT SPECIALIST.

(11) PANORAMIC IMAGING UNIT (2D OR 3D) -SUPPLIED AND INSTALLED BY HENRY SCHEIN DENTAL. BLOCKING AND ELECTRICAL BY CONTRACTOR. CONFIRM POWER REQUIREMENTS WITH HENRY SCHEIN DENTAL EQUIPMENT SPECIALIST.

(12) NITROUS OXIDE & OXYGEN SYSTEM ALARM – ALARM SUPPLIED & INSTALLED BY HENRY SCHEIN DENTAL. ELECTRICIAN TO RUN I/V CABLING BETWEEN ALARM AND MANIFOLD (33). CABLING MAY BE PROVIDED BY MANUFACTURER, SEE HENRY SCHEIN REP.

KEYNOTES

(1) WEATHERPROOF J-BOX FOR EXTERIOR SIGN. COORDINATE IN FIELD WITH SIGN INSTALLER FOR LOCATION AND OTHER REQUIREMENTS. EXTERIOR SIGN TO BE CONTROLLED BY LIGHTING CONTACTOR WITH PHOTOCELL AND TIMER.

(2) COORDINATE EXACT LOCATION OF POINT OF SALE EQUIPMENT INSTALLATION WITH OWNER AND PROVIDE DUPLEX AND VOICE/DATA OUTLETS.

(3) FIELD COORDINATE EXACT LOCATION OF ELECTRICAL DISTRIBUTION EQUIPMENT WITH ARCHITECT PRIOR TO ROUGH-IN.

(4) FIELD COORDINATE EXACT LOCATION OF THE UTILITY TRANSFORMER WITH UTILITY/CIVIL.

(5) FIELD COORDINATE EXACT LOCATION AND REQUIREMENTS OF GENERATOR WITH ARCHITECT PRIOR TO ROUGH-IN.

(6) WEATHERPROOF J-BOX FOR BUILDING MONUMENT SIGN. COORDINATE IN FIELD WITH SIGN INSTALLER FOR LOCATION AND OTHER REQUIREMENTS. EXTERIOR SIGN TO BE CONTROLLED BY LIGHTING CONTACTOR WITH PHOTOCELL AND TIMER.

(7) WEATHERPROOF J-BOX FOR EXTERIOR ROAD SIGN 100FT LOCATED FAR AWAY THE BUILDING. COORDINATE IN FIELD WITH SIGN INSTALLER FOR LOCATION AND OTHER REQUIREMENTS. EXTERIOR SIGN TO BE CONTROLLED BY LIGHTING CONTACTOR WITH PHOTOCELL AND TIMER.

(8) 2" SUB-FLOOR CONDUIT - SUB-FLOOR PIPE CHASE WITH PULL-STRING SUPPLIED AND INSTALLED BY ELECTRICIAN. SWEEPING 90 DEGREE BEND ONLY. STUB-UP FLUSH WITH SUB-FLOOR AT EACH END,MARK LOCATION AT FINISH.
2" VERTICAL CONDUIT - VERTICAL PIPE CHASE WITH PULL-STRING SUPPLIED AND INSTALLED BY ELECTRICIAN. RUN FROM ABOVE CEILING DOWN TO SINGLE-GANG MUD RING OR BOX AT SILL PLATE.

GENERAL NOTES

REFER TO ARCHITECTURAL REFLECTED CEILING PLAN FOR EXACT LOCATIONS OF ALL CEILING MOUNTED DEVICES.

ALL RECEPTACLES SHALL BE GROUNDED AS REQUIRED BY ARTICLE 250-146.

REFER HENRY SCHEIN DENTAL DRAWINGS FOR ANY AND ALL ELECTRICAL REQUIREMENTS AND INFORMATION. CONTRACTOR TO INSTALL ANY AND ALL ADDITIONAL ELECTRICAL AS DESCRIBED AND DIRECTED BY THE HENRY SCHEIN DENTAL DRAWINGS AND OR OWNER/ARCHITECT. COORDINATE EXACT LOCATIONS PRIOR TO ROUGH-IN.

HEAT PUMPS ARE LOCATED ON ROOF. FIELD COORDINATE EXACT LOCATION AND REQUIREMENTS WITH MECHANICAL DRAWINGS. INSTALL WP/GFCI DUPLEX RECEPTACLE ON ROOF WITHIN 25' OF MECHANICAL EQUIPMENT. PROVIDE "WHILE-IN USE" PROTECTIVE COVER.

ALL EQUIPMENT IN PATIENT CARE SPACES TO HAVE TWO PART GROUNDING SYSTEM PER NEC 517.13.

ALL POWER REQUIREMENTS AND LOCATION FOR J-BOX TO BE COORDINATED WITH DENTAL EQUIPMENT SUPPLIER / ARCHITECT PRIOR TO ROUGH-IN.

FOLLOW MANUFACTURER'S TEMPLATES FOR EXACT REQUIREMENTS FOR ANY EQUIPMENT SUPPLIED BY HENRY SCHEIN DENTAL. CONSULT WITH HENRY SCHEIN DENTAL REP FOR ADDITIONAL INFORMATION.

GFCI PROTECTION OR REDUNDANT GROUND IN DENTAL CHAIR RECEPTACLES, DENTAL UTILITY CABINETS AND ANY OTHER AREAS REQUIRED BY LOCAL CODE IS THE RESPONSIBILITY OF THE ELECTRICAL CONTRACTOR.

ALL CONDUIT LOCATIONS SHOULD BE VERIFIED WITH OWNER AND HENRY SCHEIN REP PRIOP TO ROUGH-IN.

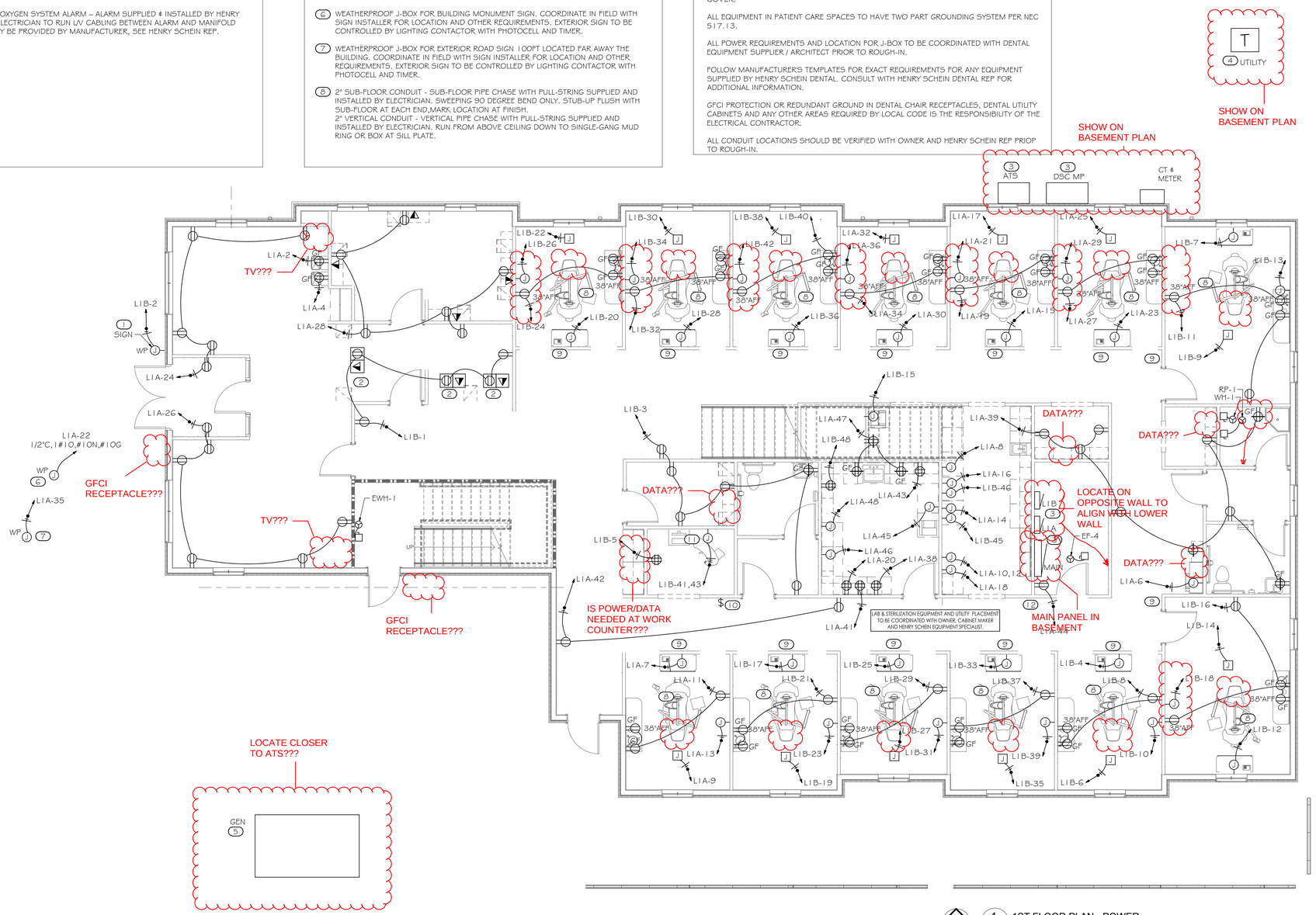

1 (E-101) 1ST FLOOR PLAN - POWER
3/16" = 1'-0"

PROFICIENT ENGINEERING
6991 Peachtree Industrial Blvd Building 700
Peachtree Corners, Georgia 30092
404.330.9798
PROJECT # 123309

STROUD AND COMPANY
427 8th Street : Macon, Ga 31201
478-743-5997

ALL Architecture, LLC
2052 CHRYSLER DRIVE NE, ATLANTA, GA 30345
TELEPHONE: (404) 316-2896
E-MAIL: INFO@ALLARCHLLC.COM

REVISIONS

NO.	DATE

COPYRIGHT
THIS DRAWING AND ALL REPRODUCTIONS ARE COPYRIGHTED AND THE PROPERTY OF ALL ARCHITECTURE, LLC AND MAY NOT BE USED IN ANY WAY WITHOUT THEIR PERMISSION.

PROJECT TITLE:
HAMILTON DENTAL
222 CHAMBLESS LN.
HAMILTON, GA 31811

SEAL:
GEORGIA LICENSED PROFESSIONAL ENGINEER No. 032547 BRIAN M. ARMENTA

DRAWN: AR	CHECKED: BA
APPROVED: BA	ISSUE DATE: 07/25/23

CAD FILE NAME: CAD FILE

SHEET TITLE:
1ST FLOOR PLAN - POWER

PROJECT NUMBER: 22016

SHEET NO:
E-101

SHEET 5 OF 12

ISSUED FOR CONSTRUCTION

PLOT DATE: 12/11/2018 7:06:02 AM

KEYNOTES

1. FIELD COORDINATE EXACT LOCATION OF ELECTRICAL DISTRIBUTION EQUIPMENT WITH ARCHITECT PRIOR TO ROUGH-IN.
2. FIELD COORDINATE EXACT LOCATION OF EXISTING TELEPHONE UTILITY CONDUIT AND LOCATE TELEPHONE TERMINAL BOARD.
3. ROUTE (2) 2"C FROM TELEPHONE UTILITY DEMARCATION POINT WITH PULL STRING.
4. MHP-1 LOCATED ON ROOF.

GENERAL NOTES

REFER TO ARCHITECTURAL REFLECTED CEILING PLAN FOR EXACT LOCATIONS OF ALL CEILING MOUNTED DEVICES.

ALL RECEPTACLES SHALL BE GROUNDED AS REQUIRED BY ARTICLE 250-146.

ALL EQUIPMENT IN PATIENT CARE SPACES TO HAVE TWO PART GROUNDING SYSTEM PER NEC 517.13.

ALL POWER REQUIREMENTS AND LOCATION FOR J-BOX TO BE COORDINATED WITH DENTAL EQUIPMENT SUPPLIER / ARCHITECT PRIOR TO ROUGH-IN.

FOLLOW MANUFACTURER'S TEMPLATES FOR EXACT REQUIREMENTS FOR ANY EQUIPMENT SUPPLIED BY HENRY SCHEIN DENTAL. CONSULT WITH HENRY SCHEIN DENTAL REP FOR ADDITIONAL INFORMATION.

GFCI PROTECTION OR REDUNDANT GROUND IN DENTAL CHAIR RECEPTACLES, DENTAL UTILITY CABINETS AND ANY OTHER AREAS REQUIRED BY LOCAL CODE IS THE RESPONSIBILITY OF THE ELECTRICAL CONTRACTOR.

ALL CONDUIT LOCATIONS SHOULD BE VERIFIED WITH OWNER AND HENRY SCHEIN REP PRIOP TO ROUGH-IN.

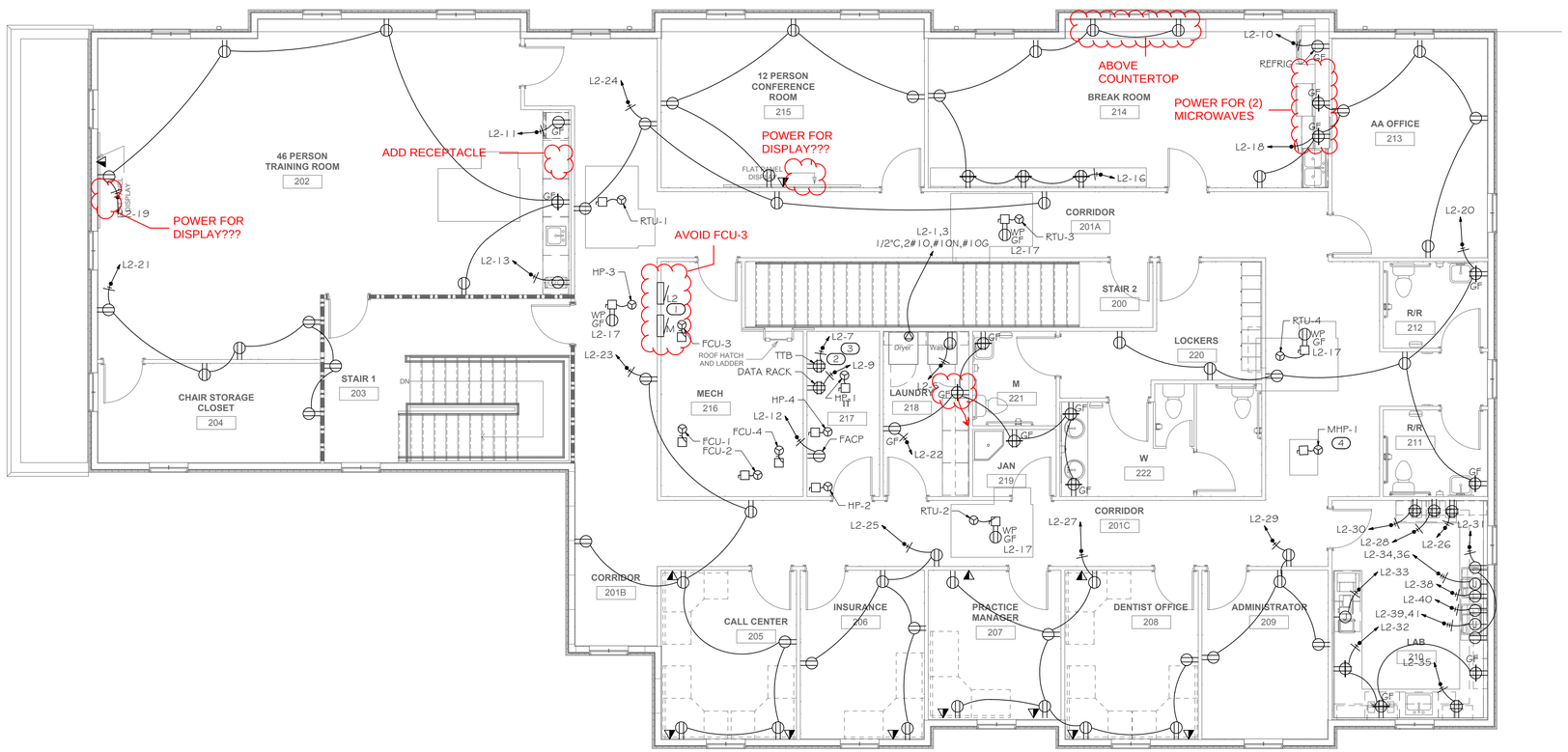

1 E-102 2ND FLOOR PLAN - POWER
3/16" = 1'-0"

PLOT DATE: 12/11/2018 7:06:02 AM

PROFICIENT ENGINEERING
6991 Peachtree Industrial Blvd Building 700
Peachtree Corners, Georgia 30092
404.330.9798
PROJECT # 123309

STROUD AND COMPANY
427 8th Street : Macon, Ga 31201
478-743-5097

ALL Architecture, LLC
2052 CHRYSLER DRIVE NE, ATLANTA, GA 30345
TELEPHONE: (404) 316-2896
E-MAIL: INFO@ALLARCHLLC.COM

REVISIONS	
NO.	DATE

COPYRIGHT
THIS DRAWING AND ALL REPRODUCTIONS ARE COPYRIGHTED AND THE PROPERTY OF ALL ARCHITECTURE, LLC AND MAY NOT BE USED IN ANY WAY WITHOUT THEIR PERMISSION.

PROJECT TITLE:
HAMILTON DENTAL
222 CHAMBLESS LN.
HAMILTON, GA 31811

SEAL:
GEORGIA REGISTERED No. 032547 PROFESSIONAL ENGINEER BRIAN M. ARMENTA

DRAWN: AR	CHECKED: BA
APPROVED: BA	ISSUE DATE: 07/25/23

CAD FILE NAME: CAD FILE

SHEET TITLE:
2ND FLOOR PLAN - POWER

PROJECT NUMBER: 22016

SHEET NO:
E-102

SHEET 7 OF 12

ISSUED FOR CONSTRUCTION

FAULT CURRENT SCHEDULE

DEVICE	FAULT	AIC RATING	L-N VOLTS	UTILITY			FED FROM			
				FAULT	X	R	DEVICE	FAULT	X	R
DSC MP	34,482	42,000	120V	33,432	0.003392	0.001174	UTILITY	41,659	0.002825	0.0005649
MAIN	29,734	42,000	120V	28,672	0.002854	0.003062	ATS	40,559	0.002017	0.002164
B	9,548	18,000	120V	9,436	0.004907	0.01173	MAIN	28,672	0.002854	0.003062
L1A	19,070	22,000	120V	18,663	0.003951	0.005073	MAIN	28,672	0.002854	0.003062
L1B	16,301	22,000	120V	15,998	0.004469	0.006024	L1A	18,663	0.003951	0.005073
L2	5,853	10,000	120V	5,807	0.006754	0.01953	MAIN	28,672	0.002854	0.003062
M	18,610	22,000	120V	17,539	0.005201	0.004446	MAIN	28,672	0.002854	0.003062

B

ROOM
MOUNTING SURFACE
FED FROM MAIN
NOTE

VOLTS 208Y/120V 3P 4W
BUS AMPS 100
NEUTRAL 100%

AIC 18,000
MAIN BKR MLO
LUGS STANDARD

CKT #	CKT BKR	CIRCUIT DESCRIPTION	LOAD KVA A	LOAD KVA B	LOAD KVA C	CKT #	CKT BKR	CIRCUIT DESCRIPTION	LOAD KVA A	LOAD KVA B	LOAD KVA C
1	30/2	ELECTRIC WALL HEATER	2.4			2	20/1	RECEPTACLE	1.1		
3	|			2.4		4	20/1	LIGHTING		0.8	
5	20/1	ELECTRIC WALL HEATER			1.5	6	15/2	MINI FAN COIL UNIT, MINI HEAT PUMP			1.9
7	20/1	RECEPTACLE	1.1			8	|		1.9		
9	20/1	EXHAUST FAN		0.1		10	30/2	VACCUM PUMP(DRY)		0.6	
11	20/1	RECEPTACLE			0.2	12	|				0.6
13	20/2	DENTAL AIR COMPRESSOR	0.6			14	20/2	SURGICAL VACCUM PUMP	0.6		
15	|			0.6		16	|			0.6	
17	20/2	DENTAL AIR COMPRESSOR			0.6	18	20/1	REMOTE WATER CONTROL			0.4
19	|		0.6			20	20/1	SPACE	0.0		
21	20/1	SPACE		0.0		22	20/1	SPACE		0.0	
23	20/1	SPACE			0.0	24	20/1	SPACE			0.0
								TOTAL CONNECTED KVA BY PHASE	8.2	5.1	5.1
								TOTAL CONNECTED AMPS BY PHASE	68.8	44.5	43.5

	CONN KVA	CALC KVA	
LIGHTING	0.8	0.9	(125%)
LARGEST MOTOR	0.1	0.0	(25%)
MOTORS	0.1	0.1	(100%)

	CONN KVA	CALC KVA	
RECEPTACLES	7.5	7.5	(50%>10)
CONTINUOUS	6.3	7.9	(125%)
HEATING	3.7	3.7	(100%)
TOTAL LOAD		20.2	
BALANCED 3-PHASE LOAD		56.0 A	

GENERAL NOTES

REFER TO ARCHITECTURAL REFLECTED CEILING PLAN FOR EXACT LOCATIONS OF ALL CEILING MOUNTED DEVICES.

ALL RECEPTACLES SHALL BE GROUNDED AS REQUIRED BY ARTICLE 250-146.

PROVIDE UNSWITCHED HOT LEG OF CIRCUIT TO EMERGENCY LIGHTING AND EXIT SIGNS.

REFER HENRY SCHEIN DENTAL DRAWINGS FOR ANY AND ALL ELECTRICAL REQUIREMENTS AND INFORMATION. CONTRACTOR TO INSTALL ANY AND ALL ADDITIONAL ELECTRICAL AS DESCRIBED AND DIRECTED BY THE HENRY SCHEIN DENTAL DRAWINGS AND OR OWNER/ARCHITECT. COORDINATE EXACT LOCATIONS PRIOR TO ROUGH-IN.

FOLLOW MANUFACTURERS TEMPLATES FOR EXACT REQUIREMENTS FOR ANY EQUIPMENT SUPPLIED BY HENRY SCHEIN DENTAL. CONSULT WITH HENRY SCHEIN DENTAL REP FOR ADDITIONAL INFORMATION.

GFCI PROTECTION OR REDUNDANT GROUND IN DENTAL CHAIR RECEPTACLES, DENTAL UTILITY CABINETS AND ANY OTHER AREAS REQUIRED BY LOCAL CODE IS THE RESPONSIBILITY OF THE ELECTRICAL CONTRACTOR.

ALL CONDUIT LOCATIONS SHOULD BE VERIFIED WITH OWNER AND HENRY SCHEIN REP PRIOP TO ROUGH-IN.

KEYNOTES

1. FIELD COORDINATE EXACT LOCATION OF ELECTRICAL DISTRIBUTION EQUIPMENT WITH ARCHITECT PRIOR TO ROUGH-IN.
2. EXHAUST FAN NEEDS TO BE CONTROLLED WITH THERMOSTAT.

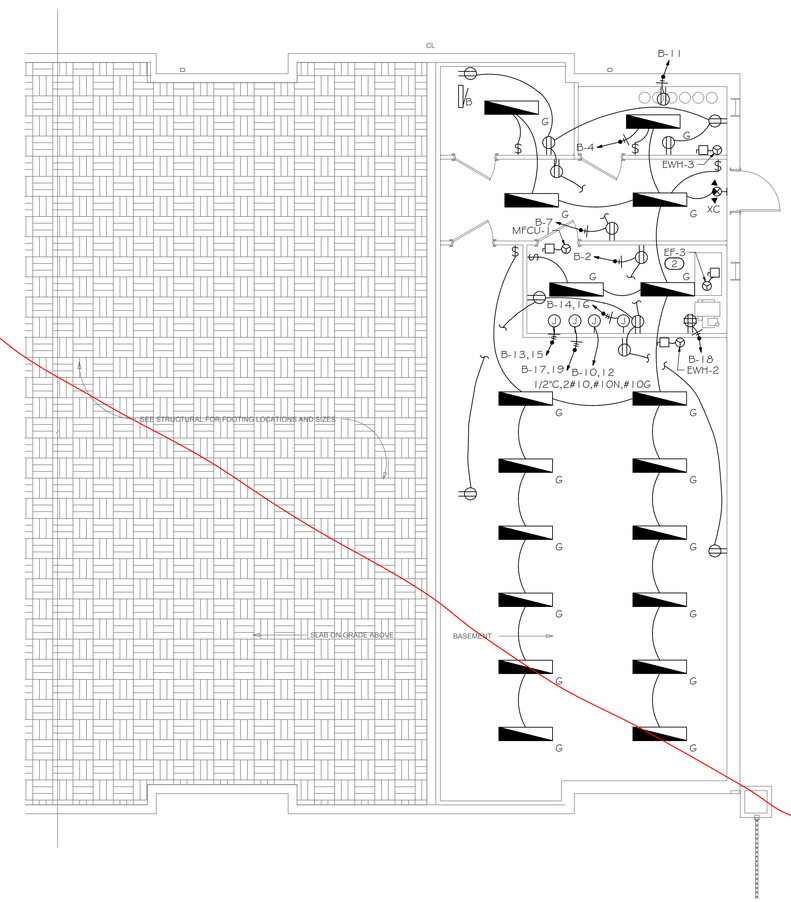

1 E-103 BASEMENT FLOOR PLAN - ELECTRICAL
3/16" = 1'-0"

PROFICIENT ENGINEERING
6991 Peachtree Industrial Blvd Building 700
Peachtree Corners, Georgia 30092
404.330.9798
PROJECT # 123309

STROUD AND COMPANY
427 8th Street : Macon, Ga 31201
478-743-5997

ALL Architecture, LLC
2052 CHRYSLER DRIVE NE, ATLANTA, GA 30345
TELEPHONE: (404) 316-2896
E-MAIL: INFO@ALLARCHLLC.COM

REVISIONS

NO.	DATE

COPYRIGHT
THIS DRAWING AND ALL REPRODUCTIONS ARE COPYRIGHTED AND THE PROPERTY OF ALL ARCHITECTURE, LLC AND MAY NOT BE USED IN ANY WAY WITHOUT THEIR PERMISSION.

PROJECT TITLE:
HAMILTON DENTAL
222 CHAMBLESS LN,
HAMILTON, GA 31811

SEAL:
GEORGIA REGISTERED PROFESSIONAL ENGINEER No. 032541 BRIAN M. ARMENTA

DRAWN: AR	CHECKED: BA
APPROVED: BA	ISSUE DATE: 05/18/23

CAD FILE NAME: CAD FILE

SHEET TITLE:
BASEMENT FLOOR PLAN - ELECTRICAL

PROJECT NUMBER: 22016

SHEET NO:
E-103

SHEET 9 OF 12

ISSUED FOR CONSTRUCTION

PLOT DATE: 12/11/2018 7:06:02 AM

LUMINAIRE SCHEDULE

CALLOUT	SYMBOL	LAMP	DESCRIPTION	MODEL	VOLTS
A		(1) 46.58W LED	2x4 LED RECESSED LIGHT	ABL- LITHONIA "RTL4" SERIES METALUX COLUMBIA	120V 1P 2W
B2		(1) 28.6W LED	2x2 LED RECESSED TROFFER	ABL-LITHONIA LITHING-COLUMBIA	120V 1P 2W
C		(1) 2035W LED	6" LED RECESSED DOWNLIGHT	ABL-LITHONIA LIGHTING "LDNG" SERIES HALO CAPRI ELITE	120V 1P 2W
E		(1) 31.6W LED	DECORATIVE PENDANT FIXTURE	BRUCK "223 912XX MC MP" SERIES	120V 1P 2W
F		(1) 21W LED	ARCHITECTURAL SURFACE LINEAR WALL WASH FIXTURE, SURFACE MOUNTED IN BACK OF COVE	LUMENCOVE LCS2 HO 120 40K FR WH DIM	120V 1P 2W
G		(1) 42W LED	4' LED STRIP LIGHT WITH FROSTED DROP DIFFUSE LENS	COLUMBIA "LCL" SERIES, LITHONIA "ZLID" SERIES	120V 1P 2W
OB		(1) 28W LED	LED WALL LIGHT	ABL-LITHONIA LIGHTING "TWRI" SERIES HUBBEL	120V 1P 2W
P		(1) 64W LED	DECORATIVE LINEAR "AIRCRAFT LIGHT"	TO BE DETERMINED	120V 1P 2W
T		(2) 1.4W LED	EMERGENCY LIGHTING UNIT	LITHONIA ELM2L-LED	120V 1P 2W
W1		(2) 1W LED	DIE CAST ARCHITECTURAL EMERGENCY LIGHT	ABL-LITHONIA LIGHTING "AFN" SERIES LIGHT ALARMS	120V 1P 2W
XC		(2) 1.5W LED	COMBINATION EXIT/EMERGENCY LIGHTING UNIT	LITHONIA LHQM-LED-R-HO	120V 1P 2W

GENERAL NOTES

REFER TO ARCHITECTURAL REFLECTED CEILING PLAN FOR EXACT LOCATIONS OF ALL CEILING MOUNTED DEVICES.

PROVIDE UNSWITCHED HOT LEG OF CIRCUIT TO EMERGENCY LIGHTING AND EXIT SIGNS.

COORDINATE WITH OWNERS REPRESENTATIVE FOR PROGRAMMING OF TIMECLOCK.

COORDINATE LIGHTING CONTROL LOCATIONS AND TYPE WITH OWNER/ARCHITECT.

EXTERIOR LIGHTING FIXTURES TO BE CONTROLLED BY LIGHTING CONTACTOR WITH PHOTOCELL AND TIMER. EXACT LOCATION OF ALL EXTERIOR LIGHTS TO BE VERIFIED WITH ARCHITECT PRIOR TO ROUGH-IN.

CONFIRM MOUNTING HEIGHT AND CONTROLS FOR PENDANT AND UNDER CABINET LIGHTING FIXTURES WITH ARCHITECT PRIOR TO INSTALLATION.

KEYNOTES

1. EXHAUST FAN TO BE CONTROLLED WITH LIGHT SWITCH.

PROFICIENT ENGINEERING
6991 Peachtree Industrial Blvd Building 700
Peachtree Corners, Georgia 30092
404.330.9798
PROJECT # 123309

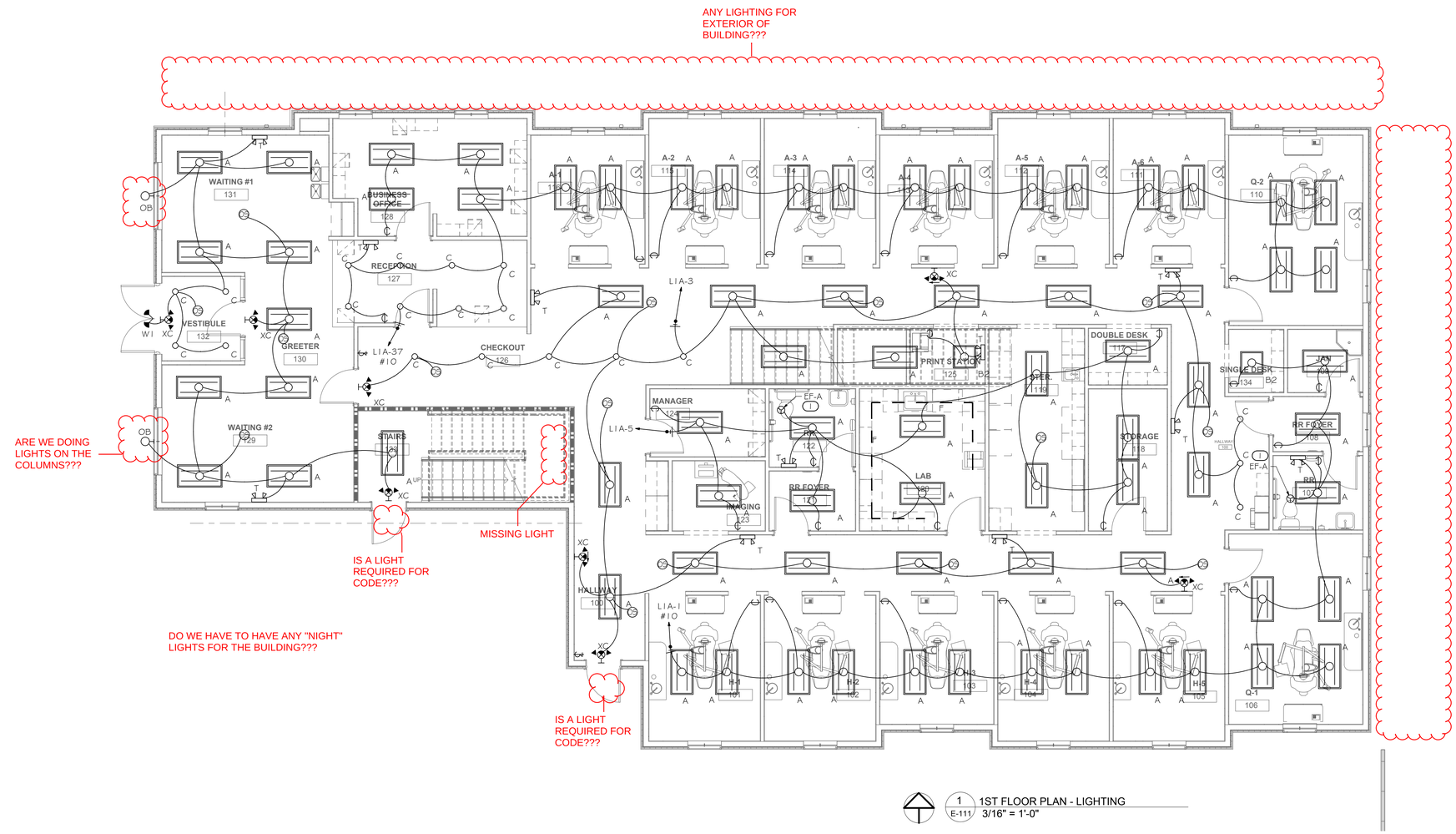

1 E-111 1ST FLOOR PLAN - LIGHTING
3/16" = 1'-0"

STROUD AND COMPANY
427 8th Street : Macon, Ga 31201
478-743-5997

ALL Architecture, LLC
2052 CHRYSLER DRIVE NE, ATLANTA, GA 30345
TELEPHONE: (404) 316-2896
E-MAIL: INFO@ALLARCHLLC.COM

REVISIONS	
NO.	DATE

COPYRIGHT
THIS DRAWING AND ALL REPRODUCTIONS ARE COPYRIGHTED AND THE PROPERTY OF ALL ARCHITECTURE, LLC AND MAY NOT BE USED IN ANY WAY WITHOUT THEIR PERMISSION.

PROJECT TITLE:
HAMILTON DENTAL
222 CHAMBLESS LN.
HAMILTON, GA 31811

SEAL:
GEORGIA REGISTERED No. 032547 PROFESSIONAL ENGINEER BRIAN M. ARMENTA

DRAWN: AR	CHECKED: BA
APPROVED: BA	ISSUE DATE: 07/25/23

CAD FILE NAME: CAD FILE

SHEET TITLE: **1ST FLOOR PLAN - LIGHTING**

PROJECT NUMBER: 22016

SHEET NO: **E-111**

SHEET 6 OF 12

ISSUED FOR CONSTRUCTION

PLOT DATE: 12/11/2018 7:06:02 AM

PROFICIENT
ENGINEERING
6991 Peachtree Industrial Blvd Building 700
Peachtree Corners, Georgia 30092
404.330.9798
PROJECT # 123309

KEYNOTES

1. EXHAUST FAN TO BE CONTROLLED WITH LIGHT SWITCH.

GENERAL NOTES

REFER TO ARCHITECTURAL REFLECTED CEILING PLAN FOR EXACT LOCATIONS OF ALL CEILING MOUNTED DEVICES.

PROVIDE UNSWITCHED HOT LEG OF CIRCUIT TO EMERGENCY LIGHTING AND EXIT SIGNS.

COORDINATE WITH OWNER'S REPRESENTATIVE FOR PROGRAMMING OF TIMECLOCK.

COORDINATE LIGHTING CONTROL LOCATIONS AND TYPE WITH OWNER/ARCHITECT.

EXTERIOR LIGHTING FIXTURES TO BE CONTROLLED BY LIGHTING CONTACTOR WITH PHOTOCELL AND TIMER. EXACT LOCATION OF ALL EXTERIOR LIGHTS TO BE VERIFIED WITH ARCHITECT PRIOR TO ROUGH-IN.

CONFIRM MOUNTING HEIGHT AND CONTROLS FOR PENDANT AND UNDER CABINET LIGHTING FIXTURES WITH ARCHITECT PRIOR TO INSTALLATION.

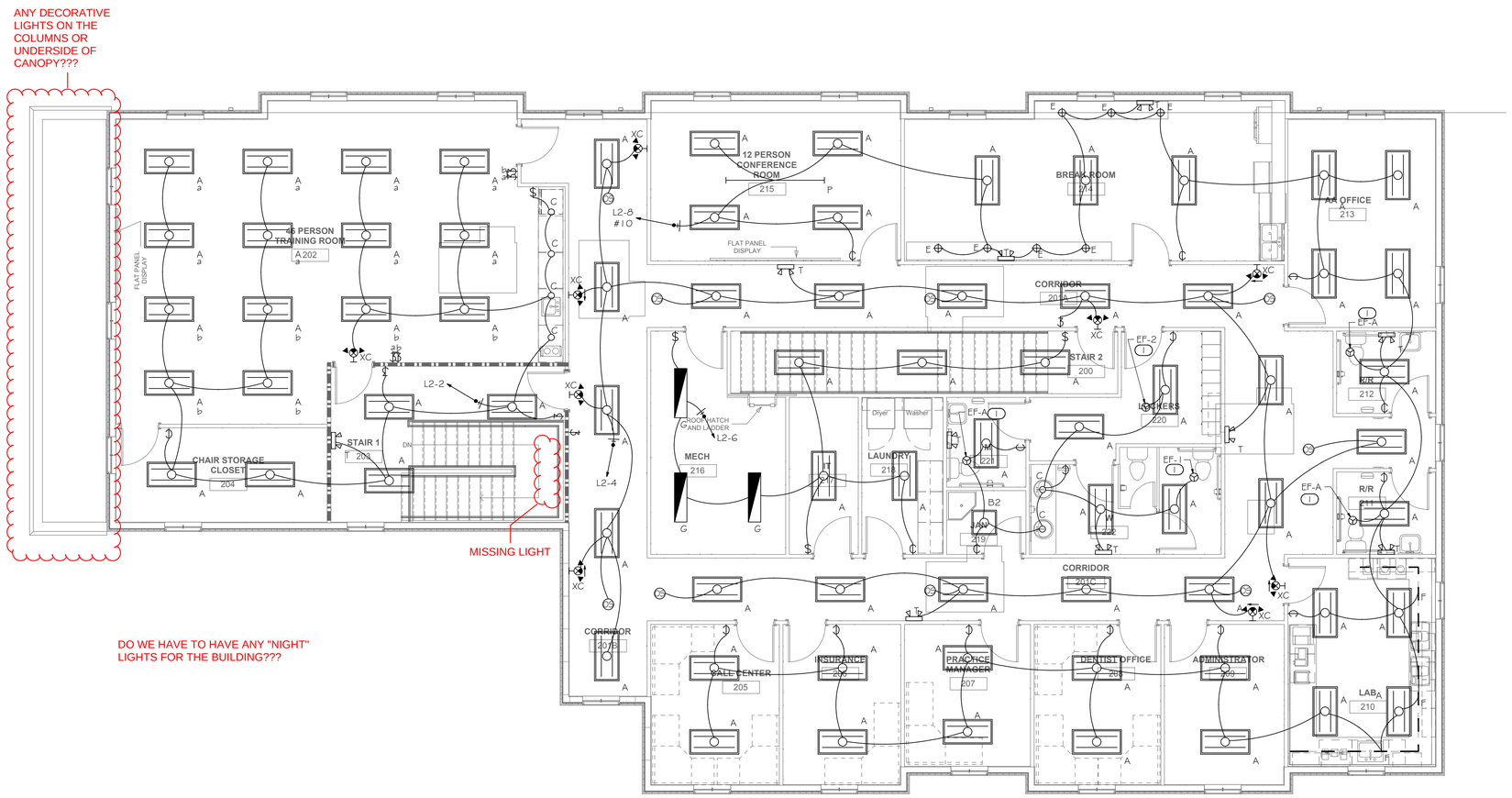

1 / E-112 2ND FLOOR PLAN - LIGHTING
3/16" = 1'-0"

STROUD AND COMPANY
427 8th Street : Macon, Ga 31201
478-743-5097

ALL Architecture, LLC
2052 CHRYSLER DRIVE NE, ATLANTA, GA 30345
TELEPHONE: (404) 316-2896
E-MAIL: INFO@ALLARCHLLC.COM

REVISIONS	
NO.	DATE

COPYRIGHT
THIS DRAWING AND ALL REPRODUCTIONS ARE COPYRIGHTED AND THE PROPERTY OF ALL ARCHITECTURE, LLC AND MAY NOT BE USED IN ANY WAY WITHOUT THEIR PERMISSION.

PROJECT TITLE:
HAMILTON DENTAL
222 CHAMBLESS LN.
HAMILTON, GA 31811

SEAL:
GEORGIA REGISTERED No. 032647 PROFESSIONAL ENGINEER BRIAN M. ARMENTA

DRAWN: AR	CHECKED: BA
APPROVED: BA	ISSUE DATE: 07/25/23

CAD FILE NAME: CAD FILE

SHEET TITLE:
2ND FLOOR PLAN - LIGHTING

PROJECT NUMBER: 22016

SHEET NO:
E-112

SHEET 8 OF 12

ISSUED FOR CONSTRUCTION

PLOT DATE: 12/11/2018 7:06:02 AM

LUMINAIRE SCHEDULE

CALLOUT	SYMBOL	LAMP	DESCRIPTION	MODEL	VOLTS
A		(1) 46.58W LED	2x4 LED RECESSED LIGHT	ABL- LITHONIA "RTL4" SERIES METALUX COLUMBIA	120V 1P 2W
B2		(1) 28.6W LED	2x2 LED RECESSED TROFFER	ABL-LITHONIA LITHING-COLUMBIA	120V 1P 2W
C		(1) 2035W LED	6" LED RECESSED DOWNLIGHT	ABL-LITHONIA LIGHTING "LDN6" SERIES HALO CAPRI ELITE	120V 1P 2W
E		(1) 31.6W LED	DECORATIVE PENDANT FIXTURE	BRUCK "223 91 2XX MC MP" SERIES	120V 1P 2W
F		(1) 21W LED	ARCHITECTURAL SURFACE LINEAR WALL WASH FIXTURE, SURFACE MOUNTED IN BACK OF COVE	LUMENCOVE LCS2 HO 120 40K FR WH DIM	120V 1P 2W
G		(1) 42W LED	4' LED STRIP LIGHT WITH FROSTED DROP DIFFUSE LENS	COLUMBIA "LCL" SERIES, LITHONIA "ZLID" SERIES	120V 1P 2W
OB		(1) 28W LED	LED WALL LIGHT	ABL-LITHONIA LIGHTING "TWR1" SERIES HUBBEL	120V 1P 2W
P		(1) 64W LED	DECORATIVE LINEAR "AIRCRAFT LIGHT"	TO BE DETERMINED	120V 1P 2W
T		(2) 1.4W LED	EMERGENCY LIGHTING UNIT	LITHONIA ELM2L-LED	120V 1P 2W
W1		(2) 1W LED	DIE CAST ARCHITECTURAL EMERGENCY LIGHT	ABL-LITHONIA LIGHTING "AFN" SERIES LIGHT ALARM5	120V 1P 2W
XC		(2) 1.5W LED	COMBINATION EXIT/EMERGENCY LIGHTING UNIT	LITHONIA LHQM-LED-R-HO	120V 1P 2W

GENERAL NOTES

REFER TO ARCHITECTURAL REFLECTED CEILING PLAN FOR EXACT LOCATIONS OF ALL CEILING MOUNTED DEVICES.

PROVIDE UNSWITCHED HOT LEG OF CIRCUIT TO EMERGENCY LIGHTING AND EXIT SIGNS.

COORDINATE WITH OWNER'S REPRESENTATIVE FOR PROGRAMMING OF TIMECLOCK.

COORDINATE LIGHTING CONTROL LOCATIONS AND TYPE WITH OWNER/ARCHITECT.

EXTERIOR LIGHTING FIXTURES TO BE CONTROLLED BY LIGHTING CONTACTOR WITH PHOTOCELL AND TIMER. EXACT LOCATION OF ALL EXTERIOR LIGHTS TO BE VERIFIED WITH ARCHITECT PRIOR TO ROUGH-IN.

CONFIRM MOUNTING HEIGHT AND CONTROLS FOR PENDANT AND UNDER CABINET LIGHTING FIXTURES WITH ARCHITECT PRIOR TO INSTALLATION.

KEYNOTES

1. EXHAUST FAN TO BE CONTROLLED WITH LIGHT SWITCH.

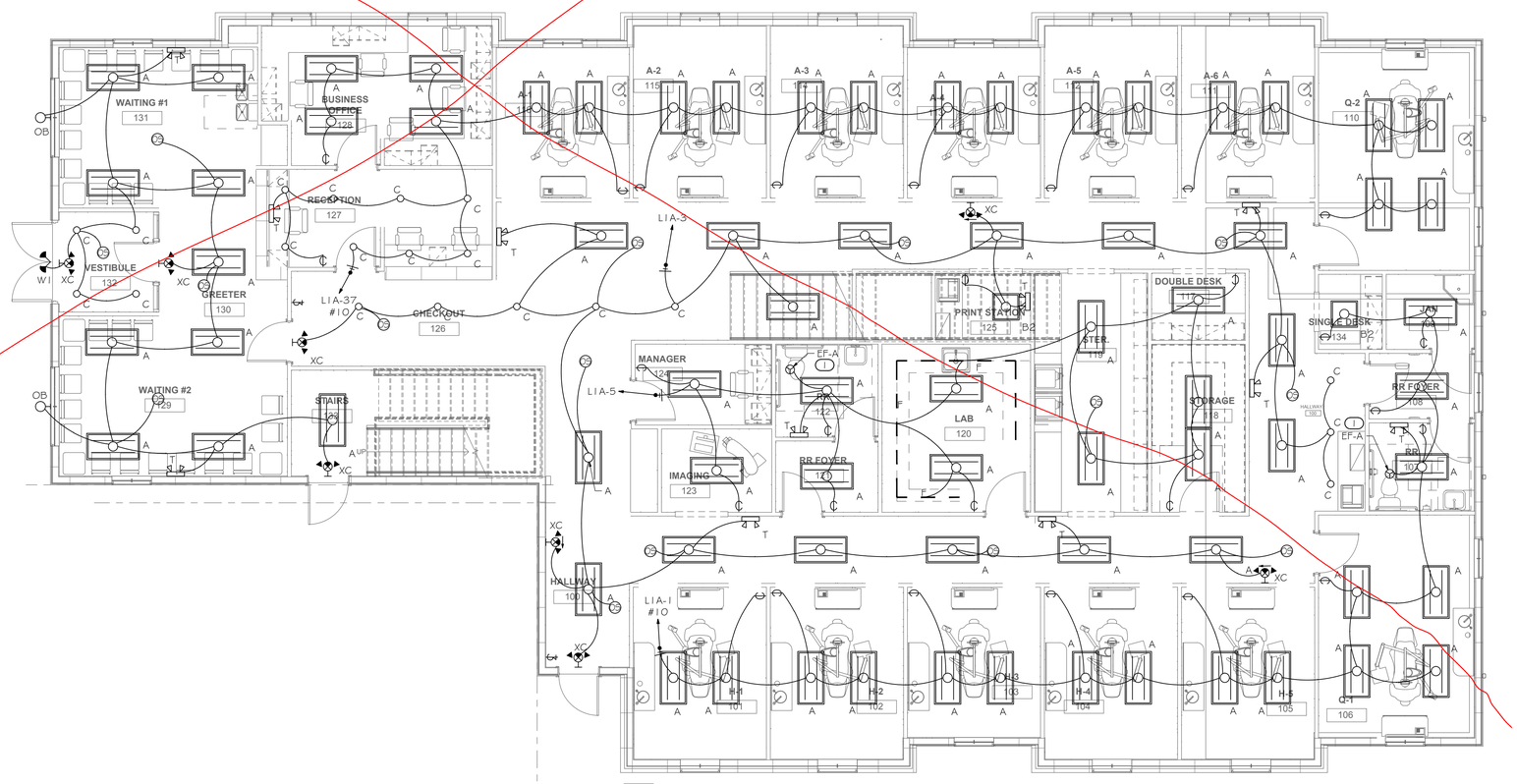

1 E-201 1ST FLOOR PLAN - LIGHTING
3/16" = 1'-0"

PROFICIENT ENGINEERING
6991 Peachtree Industrial Blvd Building 700
Peachtree Corners, Georgia 30092
404.330.9798
PROJECT # 123309

STROUD AND COMPANY
427 8th Street : Macon, Ga 31201
478-743-5997

ALL Architecture, LLC
2052 CHRYSLER DRIVE NE, ATLANTA, GA 30345
TELEPHONE: (404) 316-2896
E-MAIL: INFO@ALLARCHLLC.COM

REVISIONS

NO.	DATE

COPYRIGHT
THIS DRAWING AND ALL REPRODUCTIONS ARE COPYRIGHTED AND THE PROPERTY OF ALL ARCHITECTURE, LLC AND MAY NOT BE USED IN ANY WAY WITHOUT THEIR PERMISSION.

PROJECT TITLE:
HAMILTON DENTAL
222 CHAMBLESS LN.
HAMILTON, GA 31811

SEAL:
GEORGIA REGISTERED PROFESSIONAL ENGINEER No. 032547 BRIAN M. ARMENTA

DRAWN: AR	CHECKED: BA
APPROVED: BA	ISSUE DATE: 05/18/23

CAD FILE NAME: CAD FILE

SHEET TITLE:
1ST FLOOR PLAN - LIGHTING

PROJECT NUMBER: 22016

SHEET NO:
E-201

SHEET 6 OF 12

ISSUED FOR CONSTRUCTION

PLOT DATE: 12/11/2018 7:06:02 AM

OLD

KEYNOTES

1. EXHAUST FAN TO BE CONTROLLED WITH LIGHT SWITCH.

GENERAL NOTES

REFER TO ARCHITECTURAL REFLECTED CEILING PLAN FOR EXACT LOCATIONS OF ALL CEILING MOUNTED DEVICES.

PROVIDE UNSWITCHED HOT LEG OF CIRCUIT TO EMERGENCY LIGHTING AND EXIT SIGNS.

COORDINATE WITH OWNER'S REPRESENTATIVE FOR PROGRAMMING OF TIMECLOCK.

COORDINATE LIGHTING CONTROL LOCATIONS AND TYPE WITH OWNER/ARCHITECT.

EXTERIOR LIGHTING FIXTURES TO BE CONTROLLED BY LIGHTING CONTACTOR WITH PHOTOCELL AND TIMER. EXACT LOCATION OF ALL EXTERIOR LIGHTS TO BE VERIFIED WITH ARCHITECT PRIOR TO ROUGH-IN.

CONFIRM MOUNTING HEIGHT AND CONTROLS FOR PENDANT AND UNDER CABINET LIGHTING FIXTURES WITH ARCHITECT PRIOR TO INSTALLATION.

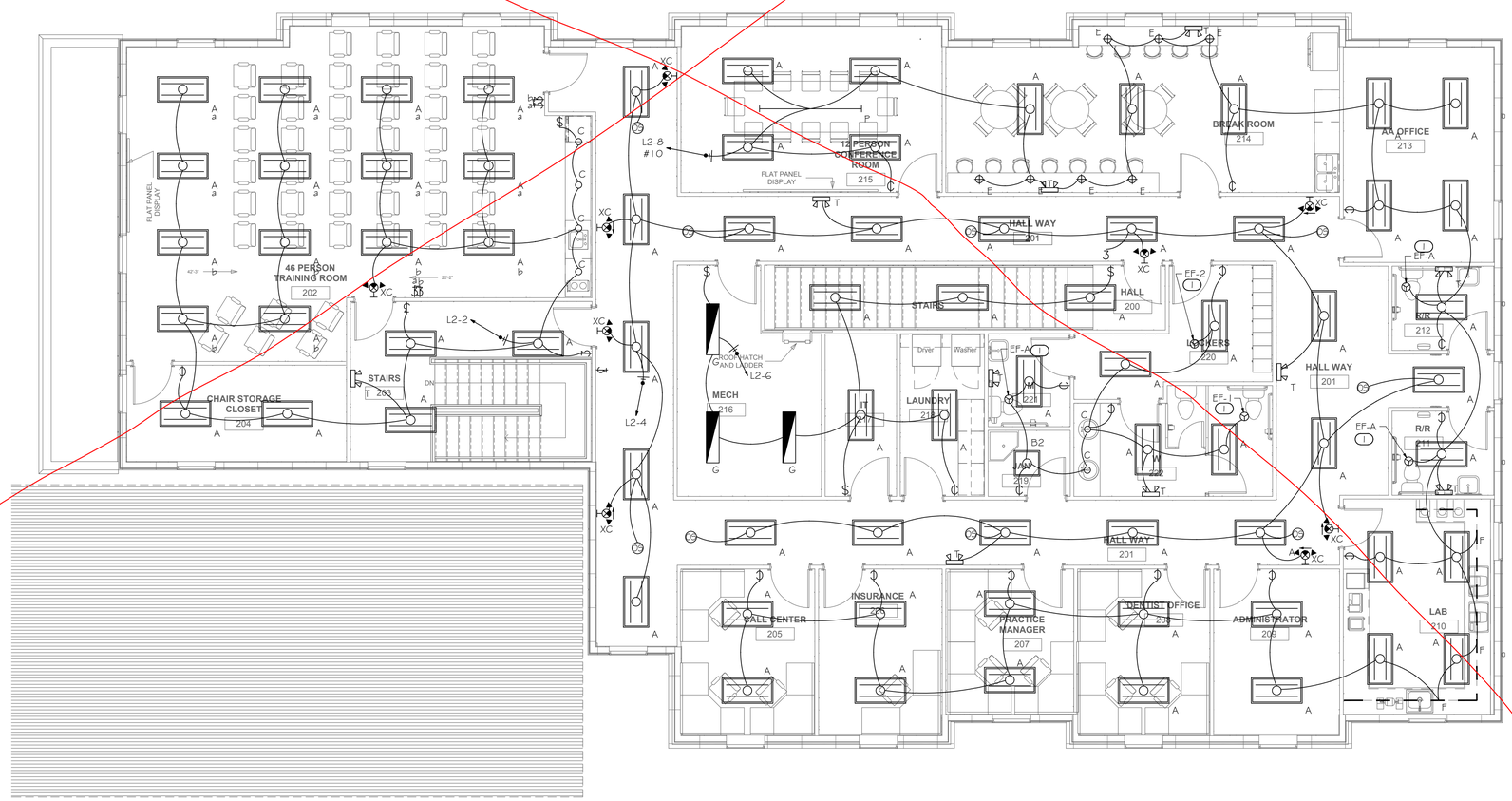

1 E-202 2ND FLOOR PLAN - LIGHTING
3/16" = 1'-0"

PLOT DATE: 12/11/2018 7:06:02 AM

PROFICIENT ENGINEERING
6991 Peachtree Industrial Blvd Building 700
Peachtree Corners, Georgia 30092
404.330.9798
PROJECT # 123309

STROUD AND COMPANY
427 8th Street : Macon, Ga 31201
478-743-5097

ALL Architecture, LLC
2052 CHRYSLER DRIVE NE, ATLANTA, GA 30345
TELEPHONE: (404) 316-2896
E-MAIL: INFO@ALLARCHLLC.COM

REVISIONS	
NO.	DATE

COPYRIGHT
THIS DRAWING AND ALL REPRODUCTIONS ARE COPYRIGHTED AND THE PROPERTY OF ALL ARCHITECTURE, LLC AND MAY NOT BE USED IN ANY WAY WITHOUT THEIR PERMISSION.

PROJECT TITLE:
HAMILTON DENTAL
222 CHAMBLESS LN,
HAMILTON, GA 31811

SEAL:
GEORGIA REGISTERED PROFESSIONAL ENGINEER No. 032541 BRIAN M. ARMENTA

DRAWN: AR	CHECKED: BA
APPROVED: BA	ISSUE DATE: 05/18/23

CAD FILE NAME: CAD FILE

SHEET TITLE:
2ND FLOOR PLAN - LIGHTING

PROJECT NUMBER: 22016

SHEET NO:
E-202

SHEET 8 OF 12

ISSUED FOR CONSTRUCTION

(A) COMPRESSED AIR: 1/2" SUPPLY LINE FROM COMPRESSOR BY PLUMBER. STUB-UP FROM FLOOR 1'-2". TERMINATE WITH 3/8" ANGLE VALVE. PRESSURE 100 PSI MAX.

(W) WATER: 1/2" COLD WATER SUPPLY LINE BY PLUMBER. STUB-UP FROM FLOOR 1'-2". TERMINATE WITH 3/8" ANGLE VALVE. PRESSURE 40 PSI MAX.

(E) ELECTRICAL: TWO GANG BOX & 115V DUPLEX OUTLET BY ELECTRICIAN. CHAIR MAX DRAW: 10A

(C) CHASE: GRAY ELECTRICAL PVC PIPE CHASE WITH PULL-STRING BY ELECTRICIAN (SEE SHEET SE.1 FOR SIZE & LOCATIONS). 6" MIN. RADIUS FOR ALL BENDS. STUB-UP FLUSH WITH SUB-FLOOR, MARK LOCATION AT FINISH.

NOTES:
1. DETAIL PROVIDED FOR UTILITY REQUIREMENTS. REFER TO MANUFACTURER'S INSTALLATION GUIDE FOR ADDITIONAL INFORMATION. HENRY SCHEIN DENTAL EQUIPMENT SPECIALIST WILL PROVIDE INSTALLATION TEMPLATE UPON REQUEST.
2. INSTALLATION MUST CONFORM TO ALL LOCAL ELECTRICAL AND PLUMBING CODES.
3. ALL UTILITIES HEREIN TO BE SUPPLIED & INSTALLED BY LICENSED CONTRACTORS. FINAL CONNECTIONS TO EQUIPMENT BY HENRY SCHEIN DENTAL.
4. ALL UTILITIES MUST BE NO HIGHER THAN 4½" A.F.F. AT FINISH.
5. ALL PLUMBED SYSTEMS MUST BE FLUSHED CLEAN OF ANY DEBRIS PRIOR TO EQUIPMENT INSTALLATION.

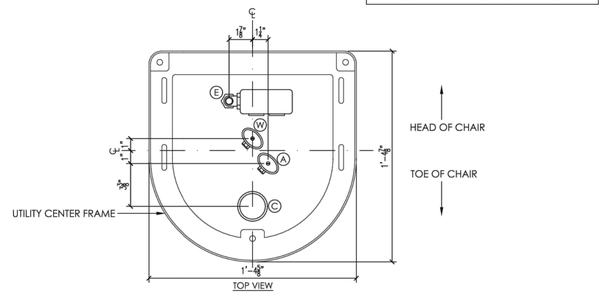

2 A-DEC 311,411 CHAIR UTILITIES
NOT TO SCALE

(A) COMPRESSED AIR: 1/2" SUPPLY LINE FROM COMPRESSOR BY PLUMBER. STUB-UP FROM FLOOR 1'-2". TERMINATE WITH 3/8" ANGLE VALVE. PRESSURE 100 PSI MAX.

(W) WATER: 1/2" COLD WATER SUPPLY LINE BY PLUMBER. STUB-UP FROM FLOOR 1'-2". TERMINATE WITH 3/8" ANGLE VALVE. PRESSURE 40 PSI MAX.

(E) ELECTRICAL: TWO GANG BOX & 115V QUAD OUTLET BY ELECTRICIAN. CHAIR MAX DRAW: 10A

(C) CHASE: GRAY ELECTRICAL PVC PIPE CHASE WITH PULL-STRING BY ELECTRICIAN (SEE SHEET SE.1 FOR SIZE & LOCATIONS). 6" MIN. RADIUS FOR ALL BENDS. STUB-UP FLUSH WITH SUB-FLOOR, MARK LOCATION AT FINISH.

NOTES:
1. DETAIL PROVIDED FOR UTILITY REQUIREMENTS. REFER TO MANUFACTURER'S INSTALLATION GUIDE FOR ADDITIONAL INFORMATION. HENRY SCHEIN DENTAL EQUIPMENT SPECIALIST WILL PROVIDE INSTALLATION TEMPLATE UPON REQUEST.
2. INSTALLATION MUST CONFORM TO ALL LOCAL ELECTRICAL AND PLUMBING CODES.
3. ALL UTILITIES HEREIN TO BE SUPPLIED & INSTALLED BY LICENSED CONTRACTORS. FINAL CONNECTIONS TO EQUIPMENT BY HENRY SCHEIN DENTAL.
4. ALL UTILITIES MUST BE NO HIGHER THAN 4½" A.F.F. AT FINISH.
5. ALL PLUMBED SYSTEMS MUST BE FLUSHED CLEAN OF ANY DEBRIS PRIOR TO EQUIPMENT INSTALLATION.

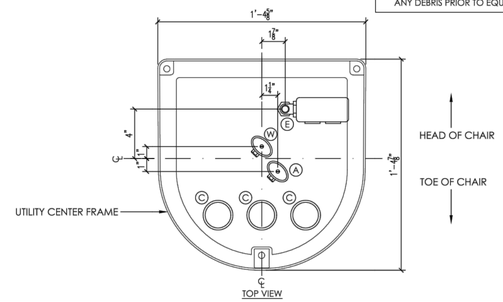

2 A-DEC 511B CHAIR UTILITIES
NOT TO SCALE

(A) COMPRESSED AIR: 1/2" SUPPLY LINE FROM COMPRESSOR BY PLUMBER. STUB-UP FROM FLOOR 1'-2". TERMINATE WITH 3/8" ANGLE VALVE. PRESSURE 100 PSI MAX.

(W) WATER: 1/2" COLD WATER SUPPLY LINE BY PLUMBER. STUB-UP FROM FLOOR 1'-2". TERMINATE WITH 3/8" ANGLE VALVE. PRESSURE 40 PSI MAX.

(E) ELECTRICAL: TWO GANG BOX & 115V QUAD OUTLET BY ELECTRICIAN.

(C) CHASE: GRAY ELECTRICAL PVC PIPE CHASE WITH PULL-STRING BY ELECTRICIAN (SEE SHEET SE.1 FOR SIZE & LOCATIONS). 6" MIN. RADIUS FOR ALL BENDS. STUB-UP FLUSH WITH SUB-FLOOR, MARK LOCATION AT FINISH.

NOTES:
1. DETAIL PROVIDED FOR UTILITY REQUIREMENTS. REFER TO MANUFACTURER'S INSTALLATION GUIDE FOR ADDITIONAL INFORMATION. HENRY SCHEIN DENTAL EQUIPMENT SPECIALIST WILL PROVIDE INSTALLATION TEMPLATE UPON REQUEST.
2. INSTALLATION MUST CONFORM TO ALL LOCAL ELECTRICAL AND PLUMBING CODES.
3. ALL UTILITIES HEREIN TO BE SUPPLIED & INSTALLED BY LICENSED CONTRACTORS. FINAL CONNECTIONS TO EQUIPMENT BY HENRY SCHEIN DENTAL.
4. ALL UTILITIES MUST BE NO HIGHER THAN 4½" A.F.F. AT FINISH.
5. ALL PLUMBED SYSTEMS MUST BE FLUSHED CLEAN OF ANY DEBRIS PRIOR TO EQUIPMENT INSTALLATION.

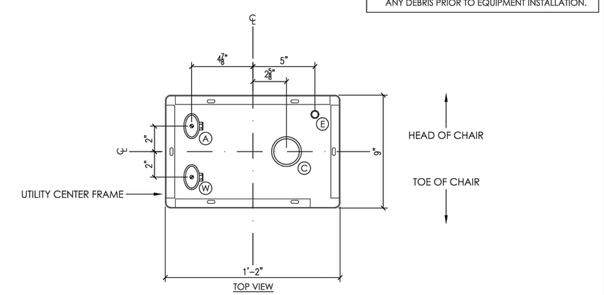

2 MARUS CHAIR UTILITIES
NOT TO SCALE

(A) COMPRESSED AIR: 1/2" SUPPLY LINE FROM COMPRESSOR BY PLUMBER. STUB-UP FROM FLOOR 1'-2". TERMINATE WITH 3/8" ANGLE VALVE. PRESSURE 100 PSI MAX.

(W) WATER: 1/2" COLD WATER SUPPLY LINE BY PLUMBER. STUB-UP FROM FLOOR 1'-2". TERMINATE WITH 3/8" ANGLE VALVE. PRESSURE 40 PSI MAX.

(V) CENTRAL VACUUM: 5/8" RISER BY PLUMBER (SCH 40 PVC OR TYPE M COPPER). TERMINATE 1-2" A.F.F.

(E) ELECTRICAL: 16" ELECTRICAL WHIP TERMINATED PER CODE FOR CONNECTION TO MANUFACTURER PROVIDED JUNCTION BOX.

(C) CHASE: GRAY ELECTRICAL PVC PIPE CHASE WITH PULL-STRING BY ELECTRICIAN (SEE SHEET SE.1 FOR SIZE & LOCATIONS). 6" MIN. RADIUS FOR ALL BENDS. STUB-UP FLUSH WITH SUB-FLOOR, MARK LOCATION AT FINISH.

(N) N_2O, O_2 SYSTEM CHECK VALVES: SEE DETAIL 7C FOR MORE INFORMATION. REQUEST VALVES FROM DENTAL DEALER EQUIPMENT REP FOR INSTALLATION DURING ROUGH-IN. ALL WORK BY ASSE 6010 (O) CERTIFIED PLUMBER.

NOTES:
1. DETAIL PROVIDED FOR UTILITY REQUIREMENTS. REFER TO MANUFACTURER'S INSTALLATION GUIDE FOR ADDITIONAL INFORMATION. HENRY SCHEIN DENTAL REP WILL PROVIDE INSTALLATION TEMPLATE UPON REQUEST.
2. INSTALLATION MUST CONFORM TO ALL LOCAL ELECTRICAL AND PLUMBING CODES.
3. ALL UTILITIES HEREIN TO BE SUPPLIED & INSTALLED BY LICENSED CONTRACTORS. FINAL CONNECTIONS TO EQUIPMENT BY HENRY SCHEIN DENTAL.
4. ALL VALVES, BOXES AND PIPES FROM FLOOR MUST BE NO HIGHER THAN 5" A.F.F.
5. ALL PLUMBED SYSTEMS MUST BE FLUSHED CLEAN OF ANY DEBRIS PRIOR TO EQUIPMENT INSTALLATION.

UTILITIES TO BE RUN IN FLOOR OR WALL BASED ON SITE CONDITIONS

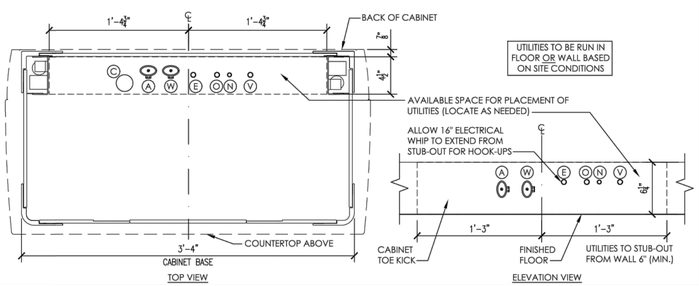

3 ADEC INSPIRE 591 CABINET UTILITIES
NOT TO SCALE

FOLLOW LOCAL CODES FOR ALL WORK.

TERMINATE CONDUIT IN BASE OF REAR CABINET OR IN WALL. SEE REAR CABINET DETAIL. COORDINATE WITH HENRY SCHEIN REP.

2" CONDUIT - PIPE CHASE WITH PULL-STRING SUPPLIED AND INSTALLED BY CONTRACTOR. 6" MIN. SWEEPING BENDS. STUB-UP FLUSH WITH SUB-FLOOR, MARK LOCATION OF PIPE AT FINISH.

SEE CHAIR/CABINET/CART UTILITY CENTER DETAIL FOR CONDUIT TERMINATION LOCATION. COORDINATE WITH HENRY SCHEIN REP.

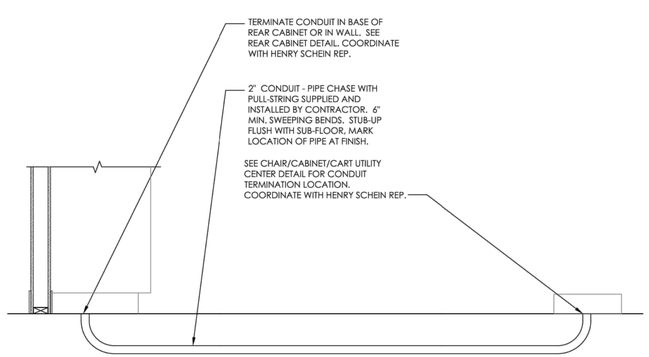

4A SUB-FLOOR CHASE
NOT TO SCALE

FOLLOW LOCAL CODES FOR ALL WORK.

5"(NOMINAL)

CEILING AS PER OWNER/ARCHITECT

INTERIOR PARTITION. CONSTRUCTION AS PER LOCAL CODES. SEE ARCHITECT.

2" CONDUIT - VERTICAL PIPE CHASE WITH PULL-STRING SUPPLIED AND INSTALLED BY CONTRACTOR. RUN FROM ABOVE CEILING DOWN TO 4" ABOVE FLOOR. MOUNT A SINGLE-GANG MUD RING OR BOX AT SILL PLATE FOR ROUTING CABLES.

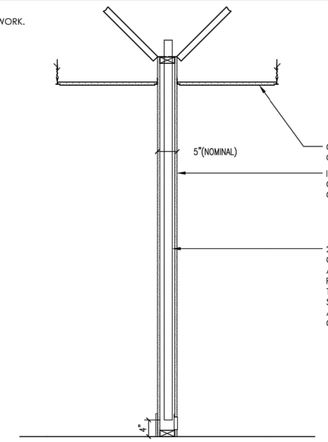

4B VERTICAL CHASE
NOT TO SCALE

FOLLOW LOCAL CODES FOR ALL WORK.

DETAIL PROVIDED FOR UTILITY REQUIREMENTS. REFER TO MANUFACTURER'S INSTALLATION GUIDE FOR ADDITIONAL INFORMATION.

TREATMENT ROOM WALL

ASSE 6010 CERTIFIED PLUMBER TO PROVIDE 3/8" N2O, 1/2" O2 LINES FROM MANIFOLD (33). OR EMERGENCY SHUT-OFF (34A) DEPENDING ON APPLICATION. SEE SHEET SP.1. SEE CABINET UTILITY DETAIL FOR HEIGHTS AND LOCATIONS (WHERE APPLICABLE).

CHECK-VALVES SUPPLIED BY HENRY SCHEIN DENTAL. INSTALLED BY ASSE 6010 CERTIFIED PLUMBER. TERMINATE LINES IN CABINET BASE OR LOCATION SPECIFIED IN CABINET UTILITY DETAIL (WHERE APPLICABLE).

VACUUM LINE RISER BY PLUMBER. TERMINATE IN CABINET BASE. SEE UTILITY CENTER DETAIL FOR HEIGHT & LOCATION (WHERE APPLICABLE). FINAL CONNECTIONS TO EQUIPMENT BY HENRY SCHEIN DENTAL.

NOTES REGARDING DENTAL NITROUS OXIDE & OXYGEN GAS SYSTEMS:

THIS OUTLET STATION IS DESIGNED FOR USE IN LOCATIONS WHERE MINIMAL TO MODERATE SEDATION MAY BE PERFORMED AS DEFINED IN NFPA 99.

ALL ASPECTS OF THIS SYSTEM MUST COMPLY WITH THE CURRENTLY ACCEPTED VERSION OF NFPA 99 IN YOUR STATE/MUNICIPALITY. THESE INCLUDE BUT ARE NOT LIMITED TO:
-MATERIALS/INSTALLATION METHODS
-INSTALLER CERTIFICATIONS (ASSE 6010)
-CYLINDER STORAGE CLOSET REQUIREMENTS
-SYSTEM VERIFICATION & CERTIFICATIONS (ASSE 6030)
-SYSTEM COMPONENT LABELING STANDARDS

IT IS THE ARCHITECT'S RESPONSIBILITY TO ENSURE THAT ALL APPLICABLE CODES ARE MET WITHIN THE CONSTRUCTION DOCUMENTS RELATING TO THE DENTAL NITROUS OXIDE & OXYGEN SYSTEM.

COPIES OF NFPA 99 OR PORTIONS THEREOF MAY BE OBTAINED BY VISITING http://www.nfpa.org, OR CALLING: 1-800-344-3555

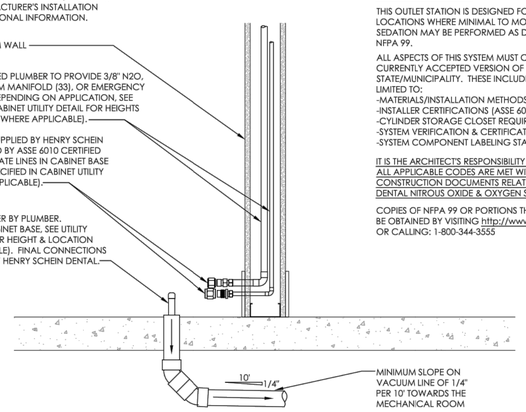

7C N_2O, O_2 SYSTEM TREATMENT ROOM TERMINATIONS
NOT TO SCALE

FOLLOW LOCAL CODES FOR ALL WORK.

DETAIL PROVIDED FOR BLOCKING & UTILITY REQUIREMENTS. REFER TO MANUFACTURER'S INSTALLATION GUIDE FOR ADDITIONAL INFORMATION.

THE WALL FABRICATION AND ATTACHMENTS TO THE BUILDING STRUCTURE MUST BE CAPABLE OF WITHSTANDING A LOAD MOMENT OF 850 FT. LBS., 45 LB. SHEAR LOAD AND 250 LB. WITHDRAWAL FORCE AT EACH OF THE MOUNTING BOLTS. FRAMING SHOULD ALLOW ALL FOUR MOUNTING BOLTS TO ENTER SOLID WOOD. MOUNTING MATERIALS SUPPLIED AND INSTALLED BY CONTRACTOR.

PROPERLY SECURE FRAMING TO STRUCTURE ABOVE FOLLOWING LOCAL CODES

4 X 4 DOUGLAS FIR-LARCH POSTS BY CONTRACTOR. SEE STACKED 2 X 4 OPTION DETAIL BELOW IF STRAIGHT, SOLID 4 X 4 POSTS ARE NOT AVAILABLE.

SINGLE-GANG JUNCTION BOX AND CONDUIT TO ABOVE CEILING (OR PER CODE) WITH PULL-STRING BY ELECTRICIAN TO 9A (IF REMOTE) OR 9B. 25' OF CABLE PROVIDED, SEE HENRY SCHEIN REP.

SINGLE GANG BOX WITH 115V POWER FEED ON DEDICATED 20A CIRCUIT BY ELECTRICIAN. PROVIDE 18" WHIP. X-RAY MAX DRAW: 12A

X-RAY MOUNTING PLATE SUPPLIED AND INSTALLED BY HENRY SCHEIN DENTAL AT FINISH. SECURE PLATE USING 3/8"X4" FULLY-THREADED LAG SCREWS. FINAL CONNECTIONS BY HENRY SCHEIN DENTAL.

2 x 4 MOUNTED HORIZONTALLY TO SECURE JUNCTION BOX

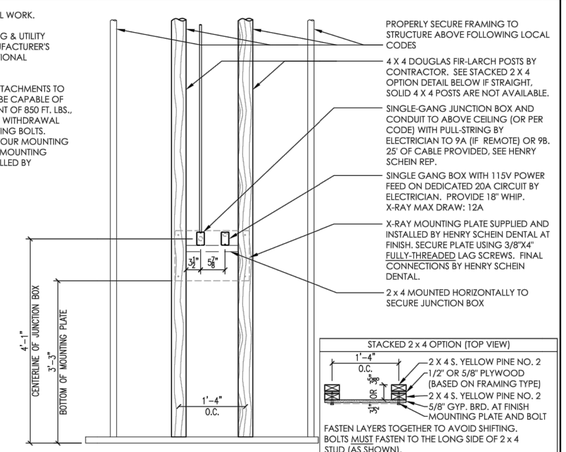

9 BELMONT BELRAY 097 X-RAY
NOT TO SCALE

FOLLOW LOCAL CODES FOR ALL WORK.

DETAIL PROVIDED FOR UTILITY REQUIREMENTS. REFER TO MANUFACTURER'S INSTALLATION GUIDE FOR ADDITIONAL INFORMATION.

SINGLE-GANG JUNCTION BOX & CONDUIT TO ABOVE CEILING (OR PER CODE) WITH PULL-STRING BY ELECTRICIAN TO 9 LOCATION. SEE SHEET SE.1.

CONTROL PANEL SUPPLIED AND INSTALLED BY HENRY SCHEIN DENTAL AT FINISH.

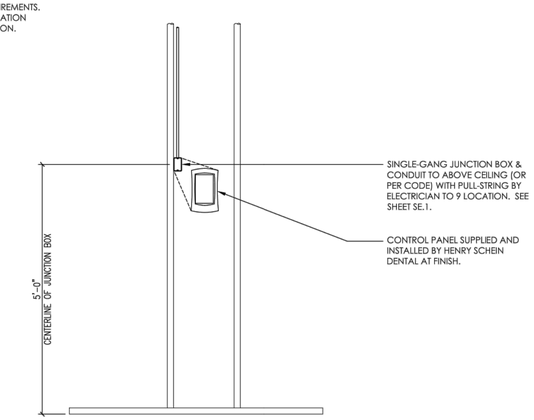

9A X-RAY CONTROL PANEL
NOT TO SCALE

PLOT DATE: 12/11/2018 7:06:02 AM

PROFICIENT ENGINEERING
6991 Peachtree Industrial Blvd Building 700
Peachtree Corners, Georgia 30092
404.330.9798
PROJECT # 123309

STROUD AND COMPANY
427 8th Street : Macon, Ga 31201
478-743-5097

ALL Architecture, LLC
2052 CHRYSLER DRIVE NE, ATLANTA, GA 30345
TELEPHONE: (404) 316-2896
E-MAIL: INFO@ALLARCHLLC.COM

REVISIONS

NO.	DATE

COPYRIGHT
THIS DRAWING AND ALL REPRODUCTIONS ARE COPYRIGHTED AND THE PROPERTY OF ALL ARCHITECTURE, LLC AND MAY NOT BE USED IN ANY WAY WITHOUT THEIR PERMISSION.

PROJECT TITLE:
HAMILTON DENTAL
222 CHAMBLESS LN.
HAMILTON, GA 31811

SEAL:
GEORGIA REGISTERED No. 032547 PROFESSIONAL ENGINEER BRIAN M. ARMENTA

DRAWN: AR	CHECKED: BA
APPROVED: BA	ISSUE DATE: 07/25/23

CAD FILE NAME: CAD FILE

SHEET TITLE:
DENTAL EQUIPMENT DETAILS

PROJECT NUMBER: 22016

SHEET NO:
SED.1

SHEET 10 OF 12

ISSUED FOR CONSTRUCTION

FOLLOW LOCAL CODES FOR ALL WORK.

DETAIL PROVIDED FOR UTILITY REQUIREMENTS. REFER TO MANUFACTURER'S INSTALLATION GUIDE FOR ADDITIONAL INFORMATION.

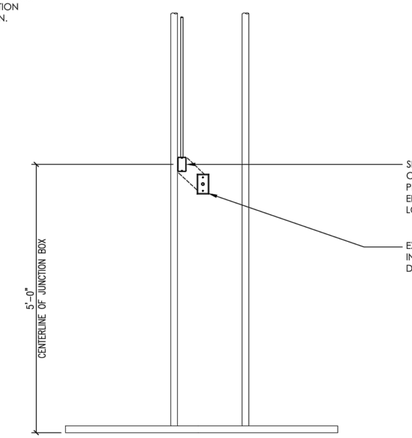

9B X-RAY EXPOSURE BUTTON

NOT TO SCALE

FOLLOW LOCAL CODES FOR ALL WORK.

DETAIL PROVIDED FOR BLOCKING & UTILITY REQUIREMENTS. REFER TO MANUFACTURER'S INSTALLATION GUIDE FOR ADDITIONAL INFORMATION.

MOUNTING MATERIALS SUPPLIED AND INSTALLED BY CONTRACTOR.

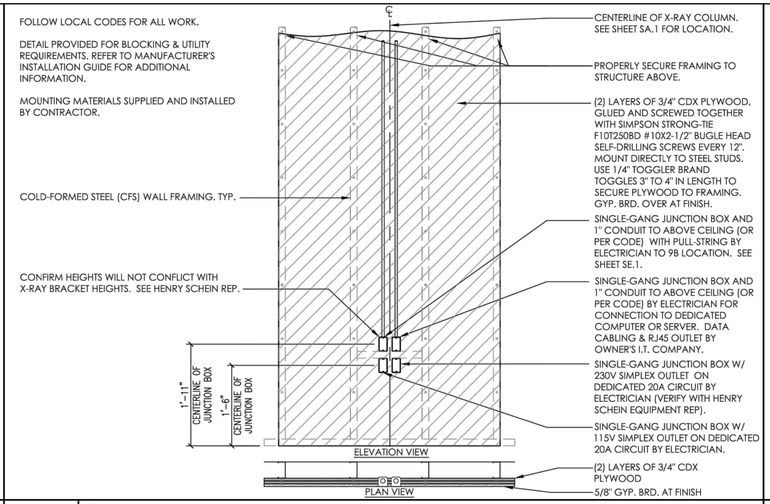

9C PANORAMIC X-RAY

NOT TO SCALE

FOLLOW LOCAL CODES FOR ALL WORK.

DETAIL PROVIDED FOR UTILITY REQUIREMENTS.

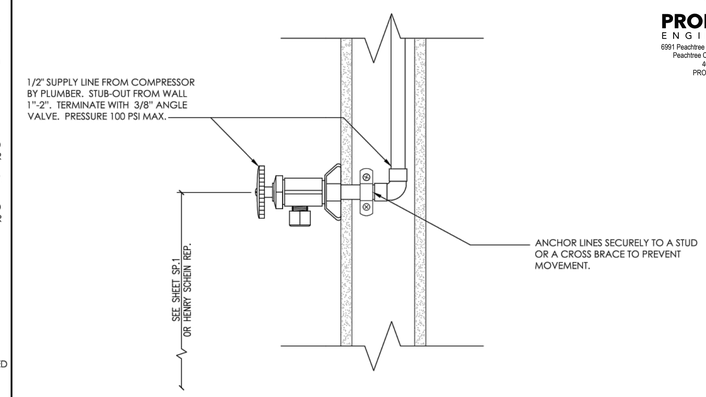

13 DENTAL AIR LINE

NOT TO SCALE

Ⓐ COMPRESSED AIR: 1/2" SUPPLY LINE FROM COMPRESSOR BY PLUMBER. STUB-OUT FROM WALL 1"-2". TERMINATE WITH 3/8" ANGLE VALVE. PRESSURE 100 PSI MAX.

Ⓦ WATER: 1/2" COLD WATER SUPPLY LINE BY PLUMBER. STUB-OUT FROM WALL 1"-2". TERMINATE WITH 3/8" ANGLE VALVE. PRESSURE 40 PSI MAX.

Ⓥ CENTRAL VACUUM: 3/4" VACUUM LINE RISER FROM MAIN TRUNK LINE BY CONTRACTOR. SECURE TO FRAMING TO PREVENT MOVEMENT. TERMINATE 1-2" FROM FINISHED WALL WITH A 3/4" FNPT FITTING. CAP FOR FUTURE.

Ⓔ ELECTRICAL: SEE NOTES PROVIDED ON ELEVATIONS BELOW. COORDINATE WITH CABINET DRAWINGS PROVIDED BY HENRY SCHEIN REP.

SINGLE GANG BOX & 115V DUPLEX OUTLET BY ELECTRICIAN FOR ULTRASONIC CLEANER. VERIFY IF A DEDICATED CIRCUIT IS REQUIRED WITH HENRY SCHEIN REP.

NOTES:
1. DETAIL PROVIDED FOR UTILITY REQUIREMENTS. REFER TO MANUFACTURER'S INSTALLATION GUIDE FOR ADDITIONAL INFORMATION AND EXACT UTILITY PLACEMENTS. HENRY SCHEIN DENTAL REP WILL PROVIDE INSTALLATION TEMPLATE UPON REQUEST.
2. INSTALLATION MUST CONFORM TO ALL LOCAL ELECTRICAL AND PLUMBING CODES.
3. ALL UTILITIES HEREIN TO BE SUPPLIED & INSTALLED BY LICENSED CONTRACTORS. FINAL CONNECTIONS OF CABINET UTILITIES BY CONTRACTORS.
4. ALL VALVES, BOXES AND PIPES FROM FLOOR MUST BE NO HIGHER THAN 6" A.F.F.
5. ALL PLUMBED SYSTEMS MUST BE FLUSHED CLEAN OF ANY DEBRIS PRIOR TO EQUIPMENT INSTALLATION.

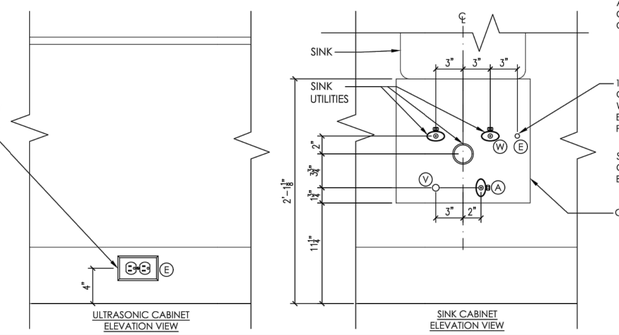

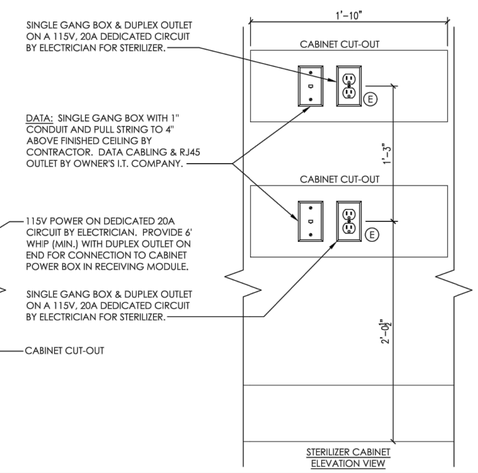

14C A-DEC 594 INSPIRE STERILIZATION CENTER UTILITIES

NOT TO SCALE

PRODUCT SPECIFICATIONS	
MODEL	V7502
TANK SIZE (W/O FITTINGS) W X L X H	14" X 13" X 14"
TANK VOLUME	3 GALLONS
WEIGHT	28 LBS

NOTE:
ALL DRAIN AND FEED LINES PROVIDED WITH UNIT

FOLLOW LOCAL CODES FOR ALL WORK.

DETAIL PROVIDED FOR UTILITY REQUIREMENTS. REFER TO MANUFACTURER'S INSTALLATION GUIDE FOR ADDITIONAL INFORMATION.

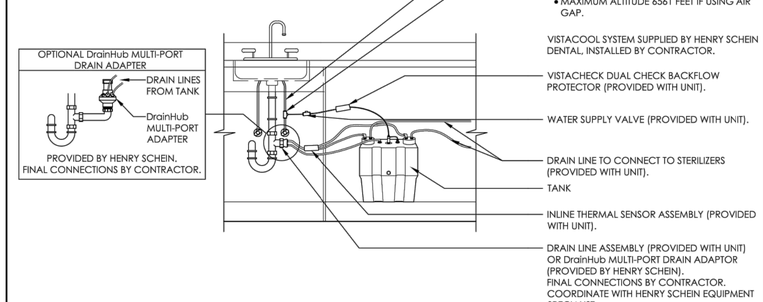

14D VISTACOOL V7502 DIRECT-TO-DRAIN SYSTEM

NOT TO SCALE

FOLLOW LOCAL CODES FOR ALL WORK.

DETAIL PROVIDED FOR UTILITY REQUIREMENTS. REFER TO MANUFACTURER'S INSTALLATION GUIDE FOR ADDITIONAL INFORMATION.

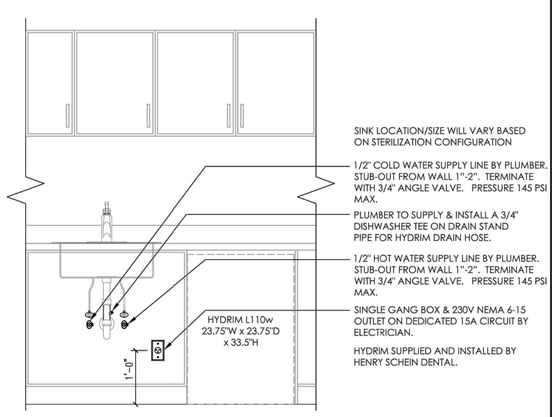

15A SCICAN HYDRIM L110w WASHER DISINFECTOR

NOT TO SCALE

FOLLOW LOCAL CODES FOR ALL WORK.

DETAIL PROVIDED FOR UTILITY REQUIREMENTS. REFER TO MANUFACTURER'S INSTALLATION GUIDE FOR ADDITIONAL INFORMATION.

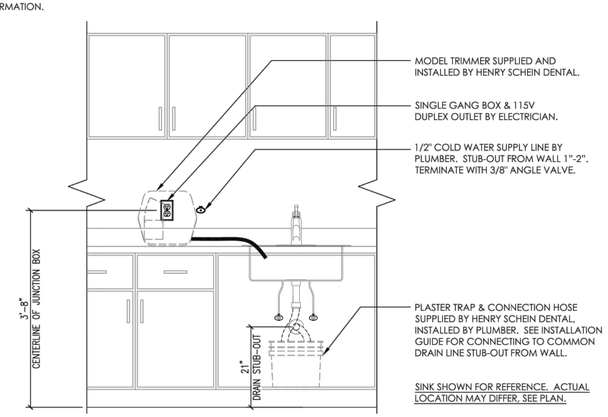

16 MODEL TRIMMER & DISPOSABLE PLASTER TRAP

NOT TO SCALE

FOLLOW LOCAL CODES FOR ALL WORK.

DETAIL PROVIDED FOR UTILITY REQUIREMENTS. REFER TO MANUFACTURER'S INSTALLATION GUIDE FOR ADDITIONAL INFORMATION.

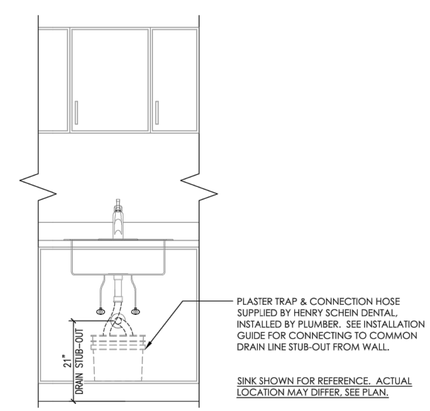

17 DISPOSABLE PLASTER TRAP

NOT TO SCALE

PLOT DATE: 12/11/2018 7:06:02 AM

PROFICIENT ENGINEERING
6991 Peachtree Industrial Blvd Building 100
Peachtree Corners, Georgia 30092
404.330.9788
PROJECT # 123309

STROUD AND COMPANY
427 8th Street : Macon, Ga 31201
478-743-5097

ALL Architecture, LLC
2052 CHRYSLER DRIVE NE, ATLANTA, GA 30345
TELEPHONE: (404) 316-2896
E-MAIL: INFO@ALLARCHLLC.COM

REVISIONS

NO.	DATE

COPYRIGHT
THIS DRAWING AND ALL REPRODUCTIONS ARE COPYRIGHTED AND THE PROPERTY OF ALL ARCHITECTURE, LLC AND MAY NOT BE USED IN ANY WAY WITHOUT THEIR PERMISSION.

PROJECT TITLE:
HAMILTON DENTAL
222 CHAMBLESS LN,
HAMILTON, GA 31811

SEAL:
GEORGIA REGISTERED PROFESSIONAL ENGINEER BRIAN M. ARMENTA No. 032547

DRAWN: AR	CHECKED: BA
APPROVED: BA	ISSUE DATE: 07/25/23

CAD FILE NAME: CAD FILE

SHEET TITLE:
DENTAL EQUIPMENT DETAILS

PROJECT NUMBER: 22016

SHEET NO:
SED.2

SHEET 11 OF 12

ISSUED FOR CONSTRUCTION

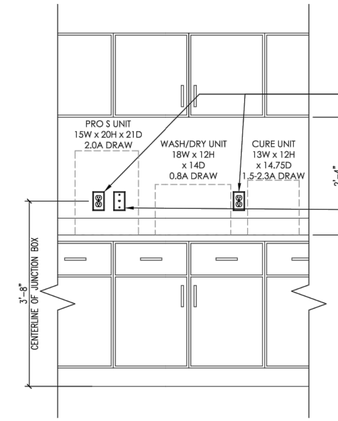

19 SPRINTRAY PRO S 3D PRINTER SYSTEM

NOT TO SCALE

FOLLOW LOCAL CODES FOR ALL WORK.

DETAIL PROVIDED FOR UTILITY REQUIREMENTS. REFER TO MANUFACTURER'S INSTALLATION GUIDE FOR ADDITIONAL INFORMATION.

UNIT HAS THE ABILITY TO CONNECT TO THE OFFICE NETWORK. CONSULT WITH OWNER AND HENRY SCHEIN REP. DATA CABLING AND JACK PROVIDED BY OWNER'S I.T. COMPANY.

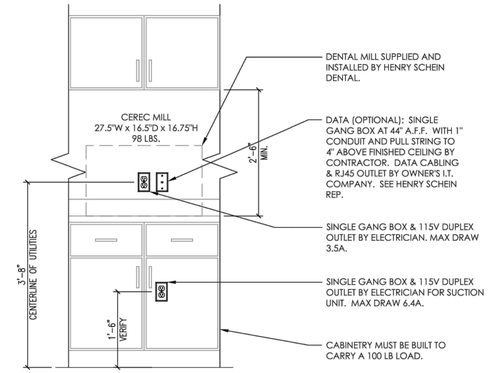

20 CEREC MILLING UNIT

NOT TO SCALE

FOLLOW LOCAL CODES FOR ALL WORK.

DETAIL PROVIDED FOR UTILITY REQUIREMENTS. REFER TO MANUFACTURER'S INSTALLATION GUIDE FOR ADDITIONAL INFORMATION.

UNIT HAS THE ABILITY TO CONNECT TO THE OFFICE NETWORK. CONSULT WITH OWNER AND HENRY SCHEIN REP. DATA CABLING AND JACK PROVIDED BY OWNER'S I.T. COMPANY.

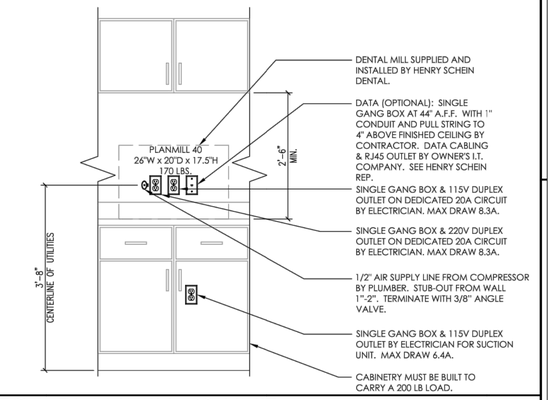

20A PLANMECA PLANMILL 40 UNIT

NOT TO SCALE

FOLLOW LOCAL CODES FOR ALL WORK.

DETAIL PROVIDED FOR UTILITY REQUIREMENTS. REFER TO MANUFACTURER'S INSTALLATION GUIDE FOR ADDITIONAL INFORMATION.

UNIT HAS THE ABILITY TO CONNECT TO THE OFFICE NETWORK. CONSULT WITH OWNER AND HENRY SCHEIN REP. DATA CABLING AND JACK PROVIDED BY OWNER'S I.T. COMPANY.

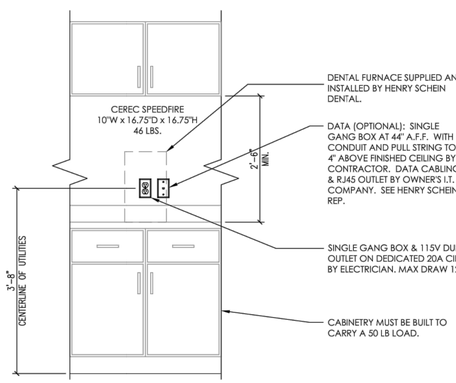

21 CEREC SPEEDFIRE FURNACE

NOT TO SCALE

THIS COMPRESSOR IS DESIGNED AS A SUPPORT GAS SYSTEM TO DRIVE DENTAL TOOLS AND SUPPLY AIR-DRIVEN EQUIPMENT AS DESCRIBED WITHIN NFPA 99. DENTAL AIR IS NOT A MEDICAL GAS.

RIGID CONDUIT TO 6" ABOVE CEILING (OR PER CODE) & 18/4 LOW VOLTAGE WIRE TO REMOTE SHUT-OFF BY ELECTRICIAN.

2" REMOTE AIR INTAKE BY PLUMBER. RUN TO EXTERIOR. PROTECT EXTERIOR PIPING FROM OUTDOOR ELEMENTS AS NEEDED.

TWO GANG BOX & 230V, 20A DEDICATED CIRCUIT BY ELECTRICIAN. POWER IS HARDWIRED. ELECTRICIAN TO SUPPLY DISCONNECT BOX IF ELECTRICAL PANEL IS NOT IN MECHANICAL ROOM.

NOTES:
1. DETAIL PROVIDED FOR UTILITY REQUIREMENTS. REFER TO MANUFACTURER'S INSTALLATION GUIDE FOR ADDITIONAL INFORMATION.
2. INSTALLATION MUST CONFORM TO ALL LOCAL ELECTRICAL AND PLUMBING CODES.
3. FINAL CONNECTIONS TO BE MADE BY LICENSED CONTRACTORS.
4. MECHANICAL ROOM MUST BE KEPT BETWEEN 40°-104° F. A THERMOSTAT CONTROLLED EXHAUST FAN IS RECOMMENDED. SPECIFICATIONS PER MECHANICAL ENGINEER.
5. PROVIDE A BUCK-BOOST TRANSFORMER IF FACILITY SERVICE DOES NOT FALL WITHIN THE RECOMMENDED SUPPLY VOLTAGE FLUCTUATION OF ± 10% OF NOMINAL VOLTAGE RATINGS LISTED. VERIFY SUPPLIER OF BUCK-BOOST TRANSFORMER WITH HENRY SCHEIN EQUIPMENT SPECIALIST.

PRODUCT SPECIFICATIONS

NOMINAL VAC RATING	230
VOLTAGE MIN/MAX	208/250
FULL LOAD AMPS	16.5
MIN. CIRCUIT BREAKER RATING (AMPS)	20
BTU PER HOUR	7,650

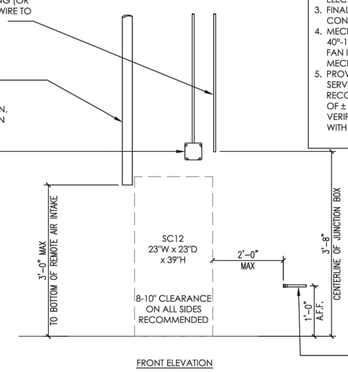

25 A-DEC SC12 COMPRESSOR

NOT TO SCALE

THIS COMPRESSOR IS DESIGNED AS A SUPPORT GAS SYSTEM TO DRIVE DENTAL TOOLS AND SUPPLY AIR-DRIVEN EQUIPMENT AS DESCRIBED WITHIN NFPA 99. DENTAL AIR IS NOT A MEDICAL GAS.

RIGID CONDUIT TO 6" ABOVE CEILING (OR PER CODE) & 18/4 LOW VOLTAGE WIRE TO REMOTE SHUT-OFF BY ELECTRICIAN.

2" REMOTE AIR INTAKE BY PLUMBER. RUN TO EXTERIOR. PROTECT EXTERIOR PIPING FROM OUTDOOR ELEMENTS AS NEEDED.

TWO GANG BOX & 230V, 20A DEDICATED CIRCUIT BY ELECTRICIAN. POWER IS HARDWIRED. ELECTRICIAN TO SUPPLY DISCONNECT BOX IF ELECTRICAL PANEL IS NOT IN MECHANICAL ROOM.

NOTES:
1. DETAIL PROVIDED FOR UTILITY REQUIREMENTS. REFER TO MANUFACTURER'S INSTALLATION GUIDE FOR ADDITIONAL INFORMATION.
2. INSTALLATION MUST CONFORM TO ALL LOCAL ELECTRICAL AND PLUMBING CODES.
3. FINAL CONNECTIONS TO BE MADE BY LICENSED CONTRACTORS.
4. MECHANICAL ROOM MUST BE KEPT BETWEEN 40°-104° F. A THERMOSTAT CONTROLLED EXHAUST FAN IS RECOMMENDED. SPECIFICATIONS PER MECHANICAL ENGINEER.
5. PROVIDE A BUCK-BOOST TRANSFORMER IF FACILITY SERVICE DOES NOT FALL WITHIN THE RECOMMENDED SUPPLY VOLTAGE FLUCTUATION OF ± 10% OF NOMINAL VOLTAGE RATINGS LISTED. VERIFY SUPPLIER OF BUCK-BOOST TRANSFORMER WITH HENRY SCHEIN EQUIPMENT SPECIALIST.

PRODUCT SPECIFICATIONS

NOMINAL VAC RATING	230
VOLTAGE MIN/MAX	215/240
FULL LOAD AMPS	6
MIN. CIRCUIT BREAKER RATING (AMPS)	15
BTU PER HOUR	2,600

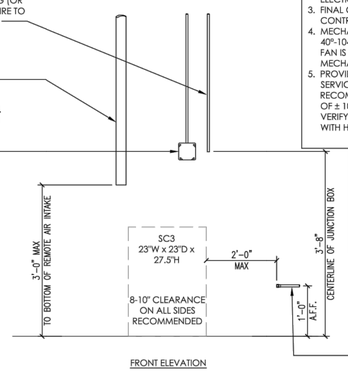

25A A-DEC SC3 COMPRESSOR

NOT TO SCALE

RIGID CONDUIT TO 6" ABOVE CEILING (OR PER CODE) & 18/4 LOW VOLTAGE WIRE TO REMOTE SHUT-OFF BY ELECTRICIAN.

2" EXHAUST VENT BY PLUMBER. RUN TO EXTERIOR. PROTECT EXTERIOR PIPING FROM OUTDOOR ELEMENTS AS NEEDED.

TWO GANG BOX & 230V, 30A DEDICATED CIRCUIT BY ELECTRICIAN. POWER IS HARDWIRED. ELECTRICIAN TO SUPPLY DISCONNECT BOX IF ELECTRICAL PANEL IS NOT IN MECHANICAL ROOM.

1/2" WATER SUPPLY LINE BY CONTRACTOR. TERMINATE WITH 1/4" ANGLE VALVE WITHIN 10' OF TANK.

1½" CLOSED VENTED DRAIN LINE FROM WALL OR FLOOR BY PLUMBER, NO TRAP BEFORE VENT.
OR DRAIN LINE WITH P-TRAP AND AIR GAP.
OR FLOOR SINK. FOLLOW LOCAL CODES.

NOTES:
1. DETAIL PROVIDED FOR UTILITY REQUIREMENTS. REFER TO MANUFACTURER'S INSTALLATION GUIDE FOR ADDITIONAL INFORMATION.
2. INSTALLATION MUST CONFORM TO ALL LOCAL ELECTRICAL AND PLUMBING CODES.
3. FINAL CONNECTIONS TO BE MADE BY LICENSED CONTRACTOR(S).
4. MECHANICAL ROOM MUST BE KEPT BETWEEN 40°-104° F. A THERMOSTAT CONTROLLED EXHAUST FAN IS RECOMMENDED. SPECIFICATIONS PER MECHANICAL ENGINEER.
5. PROVIDE A BUCK-BOOST TRANSFORMER IF FACILITY SERVICE DOES NOT FALL WITHIN THE RECOMMENDED SUPPLY VOLTAGE FLUCTUATION OF ± 10% OF NOMINAL VOLTAGE RATINGS LISTED. VERIFY SUPPLIER OF BUCK-BOOST TRANSFORMER WITH HENRY SCHEIN EQUIPMENT SPECIALIST.

PRODUCT SPECIFICATIONS

# OF MOTORS	1
NOMINAL VAC RATING	230
VOLTAGE MIN/MAX	200/240
FULL LOAD AMPS	17
MIN. CIRCUIT BREAKER RATING (AMPS)	30
MAX BTU PER HOUR	10,436

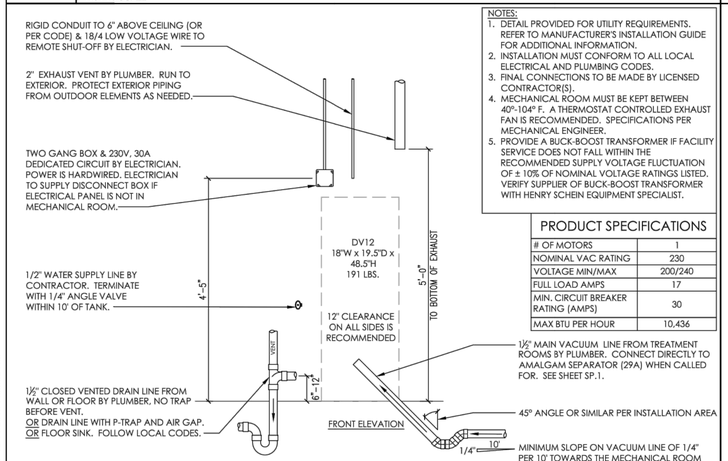

27 A-DEC DV12 VACUUM

NOT TO SCALE

1½" TYPE "K" OR "L" COPPER VACUUM LINE FROM 28A LOCATION IN TREATMENT ROOMS BY CONTRACTOR. TERMINATE IN MECH. ROOM 36" A.F.F.

RIGID CONDUIT TO 6" ABOVE CEILING (OR PER CODE) & 18/4 LOW VOLTAGE WIRE TO REMOTE SHUT-OFF BY ELECTRICIAN.

3/4" EXHAUST VENT BY PLUMBER. RUN TO EXTERIOR. PROTECT EXTERIOR PIPING FROM OUTDOOR ELEMENTS AS NEEDED.

TWO GANG BOX & 230V, 20A DEDICATED CIRCUIT BY ELECTRICIAN. POWER IS HARDWIRED. ELECTRICIAN TO SUPPLY DISCONNECT BOX IF ELECTRICAL PANEL IS NOT IN MECHANICAL ROOM.

NOTES:
1. DETAIL PROVIDED FOR UTILITY REQUIREMENTS. REFER TO MANUFACTURER'S INSTALLATION GUIDE FOR ADDITIONAL INFORMATION.
2. INSTALLATION MUST CONFORM TO ALL LOCAL ELECTRICAL AND PLUMBING CODES.
3. FINAL CONNECTIONS TO BE MADE BY LIICENSED CONTRACTOR(S).
4. MECHANICAL ROOM MUST BE KEPT BETWEEN 40°-104° F. A THERMOSTAT CONTROLLED EXHAUST FAN IS RECOMMENDED. SPECIFICATIONS PER MECHANICAL ENGINEER.
5. PROVIDE A BUCK-BOOST TRANSFORMER IF FACILITY SERVICE DOES NOT FALL WITHIN THE RECOMMENDED SUPPLY VOLTAGE FLUCTUATION OF ± 10% OF NOMINAL VOLTAGE RATINGS LISTED. VERIFY SUPPLIER OF BUCK-BOOST TRANSFORMER WITH HENRY SCHEIN EQUIPMENT SPECIALIST.

PRODUCT SPECIFICATIONS

NOMINAL VAC RATING	230
VOLTAGE MIN/MAX	208/230
FULL LOAD AMPS	9.7
MIN. CIRCUIT BREAKER RATING (AMPS)	20

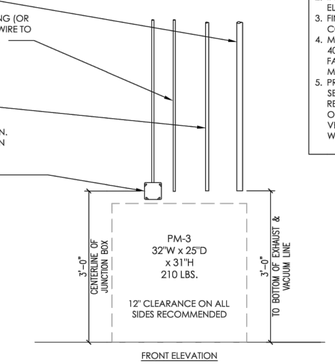

27C MIDMARK POWERMAX PM-3 VACUUM

NOT TO SCALE

FOLLOW LOCAL CODES FOR ALL WORK.

DETAIL PROVIDED FOR UTILITY REQUIREMENTS. REFER TO MANUFACTURER'S INSTALLATION GUIDE FOR ADDITIONAL INFORMATION.

3/4" PLYWOOD BLOCKING MAY BE REQUIRED IF A COLLECTION CANISTER WILL BE USED. SEE HENRY SCHEIN REP.

RECESSED D.I.S.S. VACUUM OUTLET STATION SUPPLIED BY HENRY SCHEIN DENTAL. INSTALLED BY PLUMBER. SECURE TO FRAMING DURING PLUMBING ROUGH-IN. INSTALL FACEPLATE AT FINISH. SEE SHEET SP.1 OR HENRY SCHEIN REP FOR HEIGHTS.

1/2" O.D. VACUUM LINE FROM MAIN TRUNK LINE BY PLUMBER.

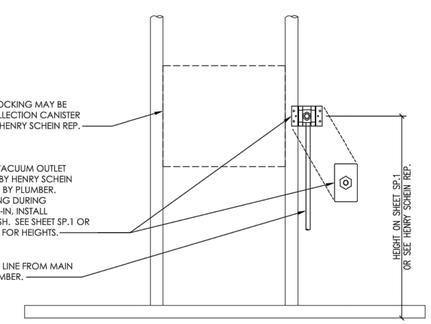

28A RECESSED VACUUM OUTLET STATION

NOT TO SCALE

PLOT DATE: 12/11/2018 7:06:02 AM

PROFICIENT ENGINEERING
6991 Peachtree Industrial Blvd Building 700
Peachtree Corners, Georgia 30092
404.330.9798
PROJECT # 123309

STROUD AND COMPANY
427 8th Street : Macon, Ga 31201
478-743-5097

ALL Architecture, LLC
2052 CHRYSLER DRIVE NE, ATLANTA, GA 30345
TELEPHONE: (404) 316-2896
E-MAIL: INFO@ALLARCHLLC.COM

REVISIONS

NO.	DATE

COPYRIGHT
THIS DRAWING AND ALL REPRODUCTIONS ARE COPYRIGHTED AND THE PROPERTY OF ALL ARCHITECTURE, LLC AND MAY NOT BE USED IN ANY WAY WITHOUT THEIR PERMISSION.

PROJECT TITLE:
HAMILTON DENTAL
222 CHAMBLESS LN,
HAMILTON, GA 31811

SEAL:
GEORGIA REGISTERED No. 032547 PROFESSIONAL ENGINEER BRIAN M. ARMENTA

DRAWN:	CHECKED:
AR	BA
APPROVED:	ISSUE DATE:
BA	07/25/23

CAD FILE NAME: CAD FILE

SHEET TITLE:
DENTAL EQUIPMENT DETAILS

PROJECT NUMBER: 22016

SHEET NO:
SED.3

SHEET 12 OF 12

ISSUED FOR CONSTRUCTION

PREPARED FOR:

DR. ALAN ARRINGTON

GENERAL NOTES & CONDITIONS (ALL TRADES)

1. DEFINITIONS

HENRY SCHEIN, HENRY SCHEIN INC., HENRY SCHEIN DENTAL, OR HSD INC. REFERS TO THE EQUIPMENT SUPPLIER FOR THIS PROJECT ENGAGED BY THE OWNER UNDER A SEPARATE CONTRACT.

E.S. - "EQUIPMENT & TECHNOLOGY SPECIALIST" IS A HENRY SCHEIN EMPLOYEE THAT SPECIALIZES IN THE MANAGEMENT OF EQUIPMENT AND/OR TECHNOLOGY SALES AND INSTALLATIONS AND HAS ASSISTED THE OWNER IN THE PREPARATION OF DRAWINGS AND SPECIFICATIONS FOR THE CONSTRUCTION OF THE PROPOSED FACILITIES.

THE "**GENERAL CONTRACTOR**", ALSO KNOWN AS THE '**G.C.**' IS REFERRED TO AS THE PERSON(S) OR ENTITY WHO HAS ENTERED INTO A CONTRACTUAL AGREEMENT WITH THE OWNER FOR THE WORK DEFINED IN SUCH AGREEMENT. THE G.C. IS RESPONSIBLE FOR ALL WORK CARRIED OUT BY THEIR SUBCONTRACTORS OR SUBTRADES. IF THE CONSTRUCTION OF THE PROJECT IS LET UNDER SEPARATE CONTRACTS BY THE OWNER, THE RESPONSIBILITIES STIPULATED BELOW SHALL APPLY TO EACH CONTRACTOR.

THE "**OWNER**" IS REFERRED TO AS THE PERSON(S) OR ENTITY WHO OWNS OR LEASES THE PREMISES FOR WHICH A CONSTRUCTION AGREEMENT HAS BEEN ENTERED UPON WITH THE GENERAL CONTRACTOR. WHERE THE OWNER, AS REFERRED TO ABOVE, LEASES THE PREMISES THE ENTITY WHO HAS OWNERSHIP OF THE PROPERTY WILL BE REFERRED TO AS THE LANDLORD.

THE "**OWNER'S AGENT**" IS A REPRESENTATIVE OF THE AGENT ACTING ON THEIR BEHALF AND MAY HAVE THE AUTHORITY TO MAKE DECISIONS IN THEIR ABSENCE. THIS MAY BE AN OFFICE MANAGER, AN ARCHITECT, AN ENGINEER, OR A PROJECT MANAGER HIRED BY THE OWNER.

2. DRAWINGS

THESE DRAWINGS ARE PREPARED BY HENRY SCHEIN AS DENTAL CONSULTANTS FOR ASSISTING AN ARCHITECT/CONTRACTOR TO PRODUCE CONSTRUCTION DOCUMENTS & BUILD A DENTAL OFFICE. THEY DO NOT CONSTITUTE A COMPLETE SET OF CONSTRUCTION DOCUMENTS. ITEMS REQUIRED FOR BUILDING PERMITS OR CONSTRUCTION MAY NOT APPEAR ON THESE DRAWINGS. IF THESE DRAWINGS ARE BEING SUBMITTED FOR BUILDING PERMIT, IT REMAINS THE OWNER AND/OR GENERAL CONTRACTOR'S RESPONSIBILITY RETAIN THE PROPER CONSULTANTS TO PREPARE COMPLETE ARCHITECTURAL, STRUCTURAL, MECHANICAL AND ELECTRICAL DRAWINGS.

DOOR SPECIFICATIONS, LIGHTING DESIGN, FINAL REFLECTED CEILING PLANS, AND OTHER SPECIFICATIONS NOT COVERED IN THESE DRAWINGS ARE BY OTHERS.

RETENTION OF OTHER CONSULTANTS SUCH AS AN ARCHITECT, M.E.P. ENGINEERS, OR SECURITY CONSULTANT, ARE THE RESPONSIBILITY OF THE OWNER AND/OR GENERAL CONTRACTOR.

3. HENRY SCHEIN, INC. RESPONSIBILITIES

HENRY SCHEIN, INC. WILL ISSUE DETAILED DRAWINGS SHOWING CRITICAL LOCATIONS & REQUIREMENTS OF ALL DENTAL-SPECIFIC EQUIPMENT. THE E.S. WILL BE AVAILABLE FOR PERIODIC FIELD VISITS. VISITS WILL BE LIMITED TO A PRE-CONSTRUCTION ON-SITE MEETING, LAYOUT CHECKS AND INSTRUCTIONS TO THE VARIOUS TRADES IN THE CRITICAL ASPECTS OF THE WORK PERTAINING TO DENTAL AND ALLIED EQUIPMENT. ALL REQUESTS FOR FIELD VISITS SHALL ALLOW REASONABLE ADVANCED NOTICE. HENRY SCHEIN, INC. AND ITS REPRESENTATIVES WILL NOT ASSUME ANY RESPONSIBILITIES FOR DEVIATIONS FROM THESE DRAWINGS WITHOUT PRIOR WRITTEN CONSENT.

PRIOR TO CONSTRUCTION, THE E.S. WILL VERIFY THE SITE DIMENSIONS OF THE SPACE PRIOR TO ENSURE THEY COINCIDE WITH THE DETAILED DRAWINGS. DURING CONSTRUCTION, THE E.S. WILL CHECK THE JOBSITE PERIODICALLY AS REQUIRED. THE E.S. WILL BE AVAILABLE TO ASSIST THE CONTRACTOR(S)AND THE OWNER IN THE INTERPRETATION OF THESE DRAWINGS AND SPECIFICATIONS. PRIOR TO ENCLOSING WALLS, THE GENERAL CONTRACTOR AND/OR THE FRAMING SUBCONTRACTOR IS REQUIRED TO COORDINATE WITH THE E.S. AND THE HENRY SCHEIN INSTALLATION TECHNICIAN. THIS INSPECTION IS CRITICAL TO ENSURE THAT THE WALL AND/OR CEILING SUPPORTS FOR DENTAL EQUIPMENT WILL MATCH WITH ANY CHANGES THAT MAY HAVE OCCURRED WITH THE OWNER'S EQUIPMENT ORDER. IT IS THE RESPONSIBILITY OF THE GENERAL CONTRACTOR TO HAVE PLUMBING, ELECTRICAL, SUPPORT BACKING, AND LEAD INSTALLATION APPROVED BY MUNICIPAL INSPECTORS BEFORE POURING SLABS, ENCLOSING PARTITIONS AND CEILING.

HENRY SCHEIN WILL NOT BE RESPONSIBLE FOR ANY UNFORESEEN CONDITIONS ARISING OUT OF, OR DURING THE COURSE OF, CONSTRUCTION NOR FOR ANY DEVIATIONS FROM DRAWINGS AND/OR SPECIFICATIONS WITHOUT PRIOR WRITTEN CONCENT.

EQUIPMENT INSTALLATION
A PRE-CONSTRUCTION MEETING IS REQUIRED WITH THE GENERAL CONTRACTOR, PLUMBER, ELECTRICIAN, CABINET MAKER, AND THE E.S. ALL TEMPLATES CRITICAL TO EQUIPMENT INSTALLATION WILL BE DISTRIBUTED AT THIS MEETING.

THE E.S. WILL INSPECT PREMISES PRIOR TO THE INSTALLATION OF ITS EQUIPMENT AT WHICH TIME ALL FINISHES (CEILINGS, FLOORING, AND PAINTING) AND MECHANICAL WORK MUST BE COMPLETED. RESPONSIBILITIES FOR THE INSTALLATION AND/OR HOOKUP OF DENTAL EQUIPMENT WILL BE DEFINED IN THE SPECIFICATIONS FOR EACH TRADE. HENRY SCHEIN DENTAL REQUIRES THAT ALL APPLICABLE TRADES BE REPRESENTED AT THE TIME OF INSTALLATION.

4. GENERAL CONTRACTOR (G.C.) - RESPONSIBILITIES

ALL ITEMS LISTED OR NOTED HEREIN ARE FOR GUIDANCE ONLY AND DO NOT NECESSARILY CONSTITUTE THE ENTIRE EXTENT OF THE WORK TO BE CARRIED OUT UNDER THE CONTRACT. THE GENERAL CONTRACTOR IS RESPONSIBLE TO DEFINE AND PROVIDE ALL THE WORK REQUIRED TO COMPLETE THIS PROJECT TO THE TRUE INTENT OF THE CONTRACT WHETHER OR NOT IT IS SPECIFICALLY SHOWN OR SPECIFIED. WHERE THESE DOCUMENTS DO NOT PROVIDE ALL THE INFORMATION NECESSARY FOR THE COMPLETE INSTALLATION OF ANY ITEM, THEN THE MANUFACTURER'S INSTRUCTIONS FOR THE ITEM SHALL BE STRICTLY FOLLOWED.

THE GENERAL CONTRACTOR SHALL, SUPPLY AND INSTALL ALL ITEMS, ARTICLES, MATERIALS, INCLUDE ALL LABOR, EQUIPMENT AND TOOLS NECESSARY TO COMPLETE THIS PROJECT AND ALL SYSTEMS SHOWN. TEST AND VERIFY ALL EQUIPMENT INSTALLED UNDER THIS CONTRACT AND INSTRUCT THE OWNER OR OWNER'S AGENT IN THE OPERATION OF THE EQUIPMENT.

THE G.C. SHALL THOROUGHLY FAMILIARIZE HIM/HERSELF WITH THE DRAWINGS, SPECIFICATIONS, AND CONDITIONS COVERING THIS JOB. THE G.C. SHALL ADVISE THE OWNER AND THE E.S. OF ANY CONFLICT BETWEEN THESE DRAWINGS AND THE FIELD CONDITIONS BEFORE PROCEEDING WITH THE WORK.

THE G.C. SHALL COMPLY WITH ALL STATE AND MUNICIPAL LAWS, ORDINANCES, RULES, AND REGULATIONS OF AUTHORITIES HAVING JURISDICTION. ALL WORK MUST MEET OR EXCEED THE CURRENT BUILDING CODE UNDER THE JURISDICTION FOR WHICH THIS PROJECT IS LOCATED. THE G.C. SHALL FILE ALL NECESSARY APPLICATIONS AND OBTAIN AND PAY FOR ALL PERMITS, AND CERTIFICATES OF APPROVAL PERTAINING TO THE CONSTRUCTION OF THE PREMISES, INCLUDING THE FINAL INSPECTION FOR OCCUPANCY PERMIT, UNLESS OTHERWISE STATED. PERMITS OBTAINED SHALL INCLUDE THE CONNECTIONS TO ALL DENTAL EQUIPMENT AND FIXTURES WHICH ARE TO BE COMPLETED BY THE GENERAL CONTRACTOR. HVAC, SPRINKLER DRAWINGS, CORRESPONDING SPECIFICATIONS OR ANY OTHER DRAWINGS AND SPECIFICATIONS THAT MAY BE REQUIRED FOR LICENSES AND PERMITS ARE TO BE PROVIDED BY OTHERS. HENRY SCHEIN INC. WILL NOT PROVIDE OR PAY FOR THESE SERVICES OR ANY OTHER DRAWINGS AND SPECIFICATIONS THAT MAY BE REQUIRED FOR LICENSES AND PERMITS.

ALL MEASUREMENTS SHALL BE CHECKED AT THE JOB SITE. THE GENERAL CONTRACTOR SHALL ASSUME ALL RESPONSIBILITY FOR THE ACCURACY OF FIELD MEASUREMENTS AND CONDITIONS. THEY ARE ALSO RESPONSIBLE FOR THE PROPER MODIFICATIONS TO ANY EXISTING, OR PREVIOUSLY INSTALLED WORK, WRITTEN APPROVAL MUST BE OBTAINED FROM THE E.S. BEFORE ANY CHANGES AND/OR DEVIATIONS FROM DRAWINGS AND SPECIFICATIONS ARE MADE.

THE G.C. SHALL ASSUME FULL RESPONSIBILITY FOR THE EXECUTION OF HIS/HER WORK AND FOR ANY CHANGES AND/OR DEVIATIONS FROM DRAWINGS OR SPECIFICATIONS MADE WITHOUT PRIOR WRITTEN APPROVAL FROM THE OWNER AND/OR THE E.S. THE COST OF CORRECTIONS RESULTING FROM CHANGES AND/OR DEVIATIONS SHALL BE BORNE BY THE GENERAL CONTRACTOR.

A COMPLETE SET OF UP-TO-DATE DRAWINGS MUST BE KEPT AT THE JOB SITE AT ALL TIMES AND ANY CHANGES MUST BE NOTED THEREON AND INITIALED.

THE CONTRACTOR SHALL INDEMNIFY AND HOLD HARMLESS THE OWNER AND THE OWNER'S AGENT FROM AND AGAINST ALL CLAIMS FOR DAMAGE TO PERSON AND/OR PROPERTY SUFFERED AS A RESULT OF THE PERFORMANCE OF WORK, WHETHER OR NOT, CAUSED BY NEGLIGENCE, AND PAY ANY EXPENSES (INCLUDING, WITHOUT LIMITATIONS, ATTORNEY'S FEES, AND DISBURSEMENTS) INCURRED IN THE CONNECTION THEREWITH.

OTHER REQUIREMENTS
THE G.C. SHALL PARTICIPATE AT JOB COORDINATION MEETINGS WITH THE HENRY SCHEIN REPRESENTATIVE AND ENSURE ATTENDANCE OF THE APPROPRIATE TRADES.

ALL TRADES SHALL DO THEIR OWN CUTTING. THE GENERAL CONTRACTOR SHALL DO ALL PATCHING TO CONFORM TO MATERIAL, TEXTURE, AND SURFACE ALIGNMENT WITH THE ADJOINING SURFACE AND FINAL TOUCH UP OF ALL FINISHED SURFACES.

THE GENERAL CONTRACTOR SHALL ENSURE THE PROTECTION OF ALL EQUIPMENT FURNISHED UNDER HIS/HER CONTRACT AND BY OTHERS.

THE G.C. SHALL REVIEW ALL CUSTOM CABINETRY, SUCH AT THE RECEPTION DESK, LABORATORY, AND STERILIZATION, WITH THE E.S. FOR ANY DENTAL EQUIPMENT INCOPRORATION.
THE G.C. SHALL REMOVE ANY RUBBISH FROM THE CONSTRUCTION SITE AND ENSURE THAT ALL PUBLIC SPACES ARE FREE OF CONSTRUCTION MATERIALS AND DEBRIS THROUGHOUT THE DURATION OF THE CONTRACT. THE G.C. IS RESPONSIBLE FOR THE TOTAL CLEAN UP OF THE JOB SITE UPON COMPLETION OF THEIR WORK.

THE GENERAL CONTRACTOR SHALL ISSUE A WRITTEN ONE-YEAR WARRANTY CERTIFICATE ON ALL WORKMANSHIP AND MATERIALS FROM THE DATE OF OCCUPANCY, UNLESS NOTED OTHERWISE IN THE CONSTRUCTION AGREEMENT BETWEEN THE OWNER AND THE G.C.. THIS CERTIFICATE SHALL BIND THE GENERAL CONTRACTOR TO PROMPTLY CORRECT, REPAIR, OR REPLACE, ANY DEFECTIVE EQUIPMENT OR WORKMANSHIP THAT WAS THE RESPONSIBILITY OF THE G.C., WITHOUT COST TO THE OWNER.

5. SEPARATE CONTRACTS BY OWNER

THE OWNER RESERVES THE RIGHT TO PERFORM WORK RELATED TO THE PROJECT WITH HIS/HER OWN FORCES, AND TO AWARD SEPARATE CONTRACTS IN CONNECTION WITH OTHER PORTIONS OF THE PROJECT OR ON OTHER WORK ON THE SITE UNDER THESE OR SIMILAR CONDITIONS OF CONTRACT. IF THE GENERAL CONTRACTOR CLAIMS THAT DELAY OR ADDITIONAL COST IS INVOLVED BECAUSE OF SUCH ACTION BY THE OWNER, THE G.C. MUST ENSURE THAT THEIR CLAIM WAS ORIGINALLY PART OF THEIR CONTRACT AGREEMENT.

THE G.C. SHALL AFFORD THE OWNER AND SEPARATE CONTRACTORS REASONABLE OPPORTUNITY FOR THE INTRODUCTION AND STORAGE OF THEIR MATERIALS AND EQUIPMENT AND THE EXECUTION OF THEIR WORK, THE G.C. SHALL CONNECT AND COORDINATE THEIR WORK WITH OTHERS AS REQUIRED BY THE CONTRACT DOCUMENTS. ANY COSTS CAUSED BY DEFECTIVE AND/OR ILL-TIME WORK SHALL BE BORNE BY THE PARTY RESPONSIBLE.

SEE OWNER OR OWNER'S AGENT FOR NON-DENTAL ITEMS AND AREAS NOT DETAILED IN THESE DRAWINGS (SUCH AS RECEPTION, BUSINESS AREA, OFFICES, STAFF LOUNGE, STORAGE ROOMS, OFFICE-WIDE SOUND SYSTEMS, CONTROLS, ETC.).

GENERAL NOTES

1. THESE DRAWINGS AND SPECIFICATIONS HAVE BEEN PRODUCED FOR THIS SPECIFIC PROJECT ONLY, AND SHALL REMAIN THE EXCLUSIVE PROPERTY OF HENRY SCHEIN INC. THESE DRAWINGS AND SPECIFICATIONS MAY NOT BE REPRODUCED OR USED FOR ANY OTHER PURPOSE WITHOUT EXPRESSED WRITTEN CONSENT AND FULL PAYMENT OF ANY ASSOCIATED FEES TO HENRY SCHEIN, INC.
2. ALL COMMUNICATIONS AND COORDINATION WITH TRADES SHALL BE THE RESPONSIBILITY OF THE G.C. UNLESS STATED OTHERWISE IN THE CONTRACT AGREEMENT.
3. THE G.C. MUST SIGN THIS SHEET STIPULATING THAT HE/SHE UNDERSTANDS AND WILL COMPLY WITH ALL SPECIFICATIONS BEFORE THE WORK WILL START. A SIGNED COPY OF THE PLANS ARE TO BE RETURNED TO THE OWNER AND HENRY SCHEIN DENTAL.
4. IT IS THE RESPONSIBILITY OF A SUBCONTRACTOR TO READ AND UNDERSTAND ALL NOTES AND ILLUSTRATIONS PERTAINING TO THEIR TRADE AND HOW THEIR WORK AFFECTS OTHER TRADES.
5. THE SUPPLY AND INSTALL OF THE CABINETS AND COUNTERTOPS, OTHER THAN THOSE SPECIFIED AND/OR CONTRACTED BY HENRY SCHEIN, INC., IS THE RESPONSIBILITY OF THE G.C..
6. THE OWNER SHALL MAKE ARRANGEMENTS FOR INSTALLATION OF NON-DENTAL SYSTEMS UNDER A SEPARATE CONTRACT BEFORE WALLS ARE ENCLOSED.
7. ROUGH-IN AND FINISH WORK FOR DENTAL EQUIPMENT IS TO BE ACCORDING TO TEMPLATES FURNISHED BY THE MANUFACTURERS OF EQUIPMENT BEING INSTALLED. THE E.S. WILL POSITION THE TEMPLATES IN THEIR PROPER LOCATIONS, AT WHICH TIME ALL SPECIFICATIONS ON THE PLANS WILL BE EXPLAINED TO THE GENERAL CONTRACTOR OR SUBCONTRACTOR(S). ALL SPECIFIED SIZES OF PIPES, TUBING, FITTINGS, ETC., AS WELL AS PROPER HEIGHTS MARKED, MUST BE STRICTLY FOLLOWED. ANY DEVIATIONS ON SIZES OR HEIGHTS OF PIPES, TUBING, AND/OR FITTINGS MUST BE CORRECTED BEFORE THE EQUIPMENT CAN BE INSTALLED, AND ANY SUCH EXTRA EXPENSE WILL BE THE RESPONSIBILITY OF G.C. AND/OR THE SUBTRADE.
8. THE G.C. SHALL SEAL ANY/ALL FLOOR AND FIRE PENETRATIONS MADE BY HENRY SCHEIN INSTALLERS AT THE FINISHING STAGES WITH THE APPROPRIATE MATERIAL.
9. THE G.C. SHALL PROVIDE DOOR THRESHOLDS & DOOR SEALS NECESSARY FOR DENTAL EQUIPMENT SOUND ATTENUATION.
10. THE GENERAL CONTRACTOR SHALL SUPPLY FASTENERS, ANCHORS, ACCESSORIES AND ADHESIVES REQUIRED FOR FABRICATION AND ERECTION OF THE WORK. KEEP EXPOSED FASTENERS TO A MINIMUM, NEATLY LAID OUT AND EVENLY SPACED. FLOOR FINISHES ARE TO BE CONTINUOUS UNDERNEATH MILLWORK AND EQUIPMENT. TRANSITIONS AND VARIATIONS BETWEEN FLOOR FINISHES TO BE SMOOTH AND LEVEL TO REDUCE INJURY WITH USE. PROVIDE 3/4" (19MM) PLYWOOD SUPPORT BETWEEN STUDS FOR ALL WALLS TO SUPPORT UPPER CABINETRY AND SHELVING, INCLUDING RECEPTION AND ALL TREATMENT ROOMS. WOOD SUPPORTS ABOVE THE CEILING MAY NEED TO BE FIRE RATED, FOLLOW LOCAL CODES.
11. PRIOR TO POURING THE CONCRETE FLOOR AND ENCLOSING ALL WALLS, THE GENERAL CONTRACTOR SHALL CONTACT THE E.S. AND INSTALLATION TECHNICIAN FOR FINAL INSPECTION OF PLUMBING, ELECTRICAL AND WOOD SUPPORTS.
12. ALL LABOR AND MATERIAL NECESSARY FOR CHANGES IN EXISTING PLUMBING, CARPENTRY, AND ELECTRICAL WORK MUST BE DONE AND SUPPLIED BY THE GENERAL CONTRACTOR AND IS NOT INCLUDED IN THE COST OF EQUIPMENT.
13. ALL PLUMBING AND ELECTRICAL LINES ARE TO BE CONCEALED UNLESS OTHERWISE SPECIFIED.
14. THE ELECTRICAL PANEL SHALL BE CONVENIENT AND ACCESSIBLE, MEET ELECTRICAL CODE REQUIREMENTS, AND BE LOCATED IN THE SUITE. LOCATION TO BE APPROVED BY THE OWNER AND LANDLORD. THE G.C. SHALL REVIEW THE LOCATION WITH THE E.S., AS WELL AS THE LOCATIONS OF THE TELEPHONE SYSTEM AND SERVER.
15. HENRY SCHEIN, INC. SHALL NOT BE HELD RESPONSIBLE FOR SUPPLYING UL/ULC OR CSA APPROVAL CERTIFICATES. THE G.C. MAY CONTACT THE MANUFACTURER IF REQUIRED.
16. THE ELECTRICAL SUBCONTRACTOR SHALL PROVIDE SPECIFIED TERMINATION BOXES, RECEPTACLES AND ANY HARDWIRE CIRCUITS LOCATED IN CUSTOM DENTAL CABINETRY. THEY ARE ALSO RESPONSIBLE FOR SUPPLYING GFCI RECEPTACLES WHERE REQUIRED BY CODE.
17. THE G.C. IS TO MAKE ARRANGEMENTS FOR TEMPORARY POWER AND/OR DISCONNECTION OF ELECTRICAL AND MECHANICAL SYSTEMS IF AND WHEN REQUIRED.
18. IF MULTIMEDIA SYSTEMS, SUCH AS ENTERTAINMENT TVS, MONITORS, OR NETWORK COMPUTER SYSTEMS, OR SECURITY SYSTEMS ARE SUPPLIED AND INSTALLED BY HENRY SCHEIN, INC., THEN THESE SYSTEMS WILL BE THEIR RESPONSIBILITY. WHEN THESE SYSTEMS, OR OTHER SYSTEMS, ARE NOT PROVIDED BY HENRY SCHEIN, INC., HENRY SCHEIN, INC. SHALL NOT BE HELD RESPONSIBLE FOR THEIR INSTALLATION OR COMMISSIONING.
19. HENRY SCHEIN, INC. WILL ASSEMBLE EQUIPMENT AND, WHERE SPECIFIED WITHIN THESE DRAWINGS, CONNECT TO UTILITIES PROVIDED. SUCH CONNECTIONS BY OTHER TRADES ARE SUPPLIED CORRECTLY AND COMPLETELY (WITH PROPER SHUT-OFF VALVES/FITTINGS/ OUTLETS/TERMINATIONS). VERIFY ALL CONTRACTOR RESPONSIBILITIES FOR FINAL CONNECTIONS WITH THESE DRAWINGS AND HENRY SCHEIN DENTAL E.S.. DIRECT ANY QUESTIONS REGARDING CONTRACTOR RESPONSIBILITIES TO HENRY SCHEIN DENTAL E.S. PRIOR TO CONSTRUCTION.
20. WHEN APPLICABLE. THE G.C. SHALL BE RESPONSIBLE FOR PROCURING A PLUMBING SUB-CONTRACTOR THAT IS CERTIFIED TO INSTALL NITROUS OXIDE–OXYGEN CONSCIOUS SEDATION SYSTEMS AS DETAILED IN THESE PLANS. HENRY SCHEIN DENTAL IS A NITROUS OXIDE SYSTEM END USER COMPONENT SUPPLIER AND DOES NOT MANUFACTURE OR DESIGN ANY OF THESE SYSTEMS. ANY SYSTEM DESIGN SHOWN ON THESE PLANS BY HENRY SCHEIN DENTAL IS TO BE USED AS AN ILLUSTRATION ONLY FOR THE PURPOSE OF LOCATING END USER OUTLET STATIONS, CYLINDER ROOM MANIFOLD, AND ALARM PANEL. THE FINAL TRUNK SYSTEM INSTALLATION SHALL ADHERE TO THE MECHANICAL ENGINEERING DRAWINGS PREPARED BY A THIRD PARTY.
21. PLUMBING SUBCONTRACTOR SHALL PROVIDE GAS CERTIFICATION CREDENTIALS IN ACCORDANCE WITH ANY REQUESTS BY THE OWNER, GENERAL CONTRACTOR, BUILDING DEPARTMENT, OR HENRY SCHEIN DENTAL PRIOR TO COMMENCING WORK IF ANY TYPE OF NITROUS–OXIDE SYSTEM IS BEING INCORPORATED INTO THE PROJECT.

PRIOR TO POURING THE CONCRETE FLOOR AND ENCLOSING ALL WALLS AND CEILINGS, THE GENERAL CONTRACTOR SHALL CONTACT THE E.S. AND INSTALLATION TECHNICIAN FOR FINAL INSPECTION OF PLUMBING, ELECTRICAL AND WOOD SUPPORTS.

EQUIPMENT SPECIALIST (E.S.): GEORGE HUMMERT **TELEPHONE:** (678)-644-7519

INSTALLATION TECHNICIAN: _____ **TELEPHONE:** _____

SHEET INDEX

SHEET	TITLE
SCV	COVER SHEET
SA.1	1ST FLOOR DENTAL EQUIPMENT FLOOR PLAN
SA.2	2ND FLOOR DENTAL EQUIPMENT FLOOR PLAN
SA.3	BASEMENT DENTAL EQUIPMENT FLOOR PLAN
SR.1	1ST FLOOR DENTAL REINFORCEMENT PLAN
SR.2	2ND FLOOR DENTAL REINFORCEMENT PLAN
SR.3	BASEMENT DENTAL REINFORCEMENT PLAN
SP.1	1ST FLOOR DENTAL PLUMBING SPECIFICATIONS
SP.2	2ND FLOOR DENTAL PLUMBING SPECIFICATIONS
SP.3	BASEMENT DENTAL PLUMBING SPECIFICATIONS
SE.1	1ST FLOOR DENTAL ELECTRICAL SPECIFICATIONS
SE.2	2ND FLOOR DENTAL ELECTRICAL SPECIFICATIONS
SE.3	BASEMENT DENTAL ELECTRICAL SPECIFICATIONS
SED.1	DENTAL EQUIPMENT DETAILS
SED.2	DENTAL EQUIPMENT DETAILS
SED.3	DENTAL EQUIPMENT DETAILS
SED.4	DENTAL EQUIPMENT DETAILS

HENRY SCHEIN®
INTEGRATED DESIGN STUDIO
10920 W LINCOLN AVE, WEST ALLIS, WI 53227
henryscheinintegratedesign.com

PROJECT: **DR. ALAN ARRINGTON**

LOCATION: 222 CHAMBLESS LN., HAMILTON, GA. 31811

HENRY SCHEIN REP: GEORGE HUMMERT

REGION: GA - GEORGIA

PHONE #: (678)-644-7519

-IMPORTANT NOTE-
THIS DOCUMENT HAS BEEN PREPARED AS AN INSTRUMENT OF PROFESSIONAL SERVICE AND **IS NOT AN ARCHITECTURAL PLAN.** THE IDEAS/ DESIGN INCLUDED HEREIN ARE THE SOLE PROPERTY OF HENRY SCHEIN, INC. AND ARE PROTECTED UNDER COPYRIGHT. THESE PLANS MAY NOT BE USED OR REPRODUCED WITHOUT EXPRESSED WRITTEN CONSENT OF HENRY SCHEIN, INC. AND FULL PAYMENT OF ANY ASSOCATED DESIGN FEES.
ALL DIMENSIONS ARE SUBJECT TO JOB-SITE VERIFICATION.

PROJECT NUMBER: 23-0142

PROJECT START DATE: 1/20/2023

FINALS START DATE: 1/20/2023

DRAWN BY: ARCH
FINALS BY: TJK
CHECKED BY: ANT

REVISIONS:

1/30/23	TJK
2/7/23	TJK
2/14/23	TJK
2/27/23	TJK
3/3/23	TJK
3/14/23	TJK
5/25/23	ARCH
--/--/--	---
--/--/--	---

INT.SQ.FT.= PER ARCH

SCALE: N/A SHT. SIZE: 24 x 36

COVER SHEET

SCV

© 2023 by HENRY SCHEIN, INC.

C:\Users\tom.king\OneDrive - Henry Schein, Inc\Shared Documents - Servert_ALL REGIONS\GA Georgia\ARRINGTON_2023 Sweet\ARRINGTON-1\ARCH.DS

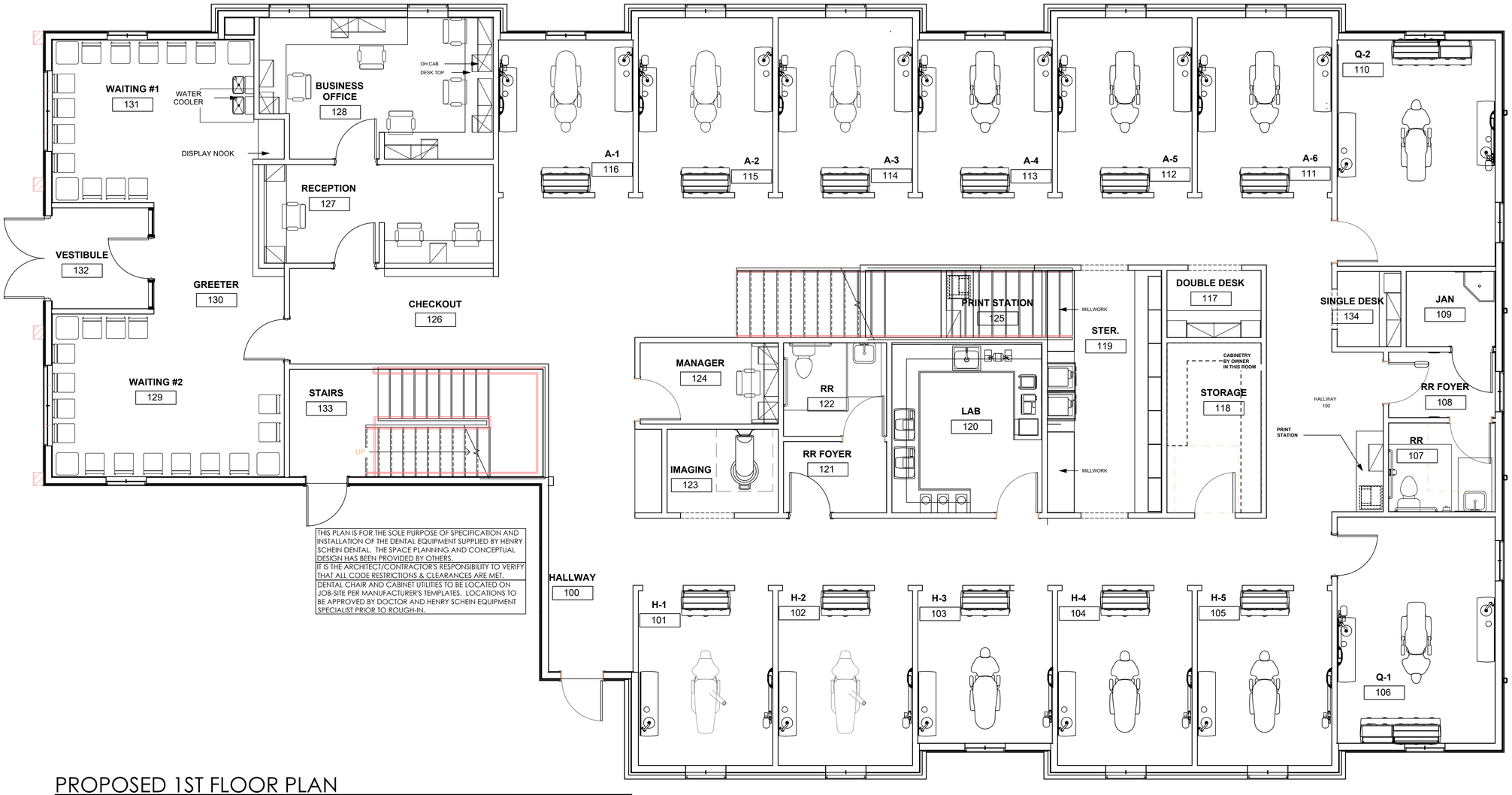

THIS PLAN IS FOR THE SOLE PURPOSE OF SPECIFICATION AND INSTALLATION OF THE DENTAL EQUIPMENT SUPPLIED BY HENRY SCHEIN DENTAL. THE SPACE PLANNING AND CONCEPTUAL DESIGN HAS BEEN PROVIDED BY OTHERS.

IT IS THE ARCHITECT/CONTRACTOR'S RESPONSIBILITY TO VERIFY THAT ALL CODE RESTRICTIONS & CLEARANCES ARE MET.

DENTAL CHAIR AND CABINET UTILITIES TO BE LOCATED ON JOB-SITE PER MANUFACTURER'S TEMPLATES. LOCATIONS TO BE APPROVED BY DOCTOR AND HENRY SCHEIN EQUIPMENT SPECIALIST PRIOR TO ROUGH-IN.

PROPOSED 1ST FLOOR PLAN

1/4"=1'-0"

HENRY SCHEIN®
INTEGRATED DESIGN STUDIO
10920 W LINCOLN AVE, WEST ALLIS, WI 53227
henryscheinintegratedesign.com

PROJECT: **DR. ALAN ARRINGTON**

LOCATION: 222 CHAMBLESS LN, HAMILTON, GA. 31811

HENRY SCHEIN REP: GEORGE HUMMERT

REGION: GA - GEORGIA

PHONE #: (678)-644-7519

-IMPORTANT NOTE-
THIS DOCUMENT HAS BEEN PREPARED AS AN INSTRUMENT OF PROFESSIONAL SERVICE AND **IS NOT AN ARCHITECTURAL PLAN.** THE IDEAS/ DESIGN INCLUDED HEREIN ARE THE SOLE PROPERTY OF HENRY SCHEIN, INC. AND ARE PROTECTED UNDER COPYRIGHT. THESE PLANS MAY NOT BE USED OR REPRODUCED WITHOUT EXPRESSED WRITTEN CONSENT OF HENRY SCHEIN, INC. AND FULL PAYMENT OF ANY ASSOCIATED DESIGN FEES. **ALL DIMENSIONS ARE SUBJECT TO JOB-SITE VERIFICATION.**

PROJECT NUMBER: 23-0142

PROJECT START DATE: 1/20/2023

FINALS START DATE: 1/20/2023

DRAWN BY: ARCH
FINALS BY: TJK
CHECKED BY: ANT

REVISIONS:

1/30/23	TJK
2/7/23	TJK
2/14/23	TJK
2/27/23	TJK
3/3/23	TJK
3/14/23	TJK
5/25/23	ARCH
--/--/--	---
--/--/--	---

INT.SQ.FT.= PER ARCH

SCALE: 1/4"=1'-0"
SHT. SIZE: 24 x 36

FLOOR PLAN

SA.1

© 2023 by HENRY SCHEIN, INC.

C:\Users\tom.king\OneDrive - Henry Schein, Inc\Shared Documents - Server_ALL REGIONS\GA Georgia\ARRINGTON_2023 Space\ARRINGTON\1\ARCH.F5

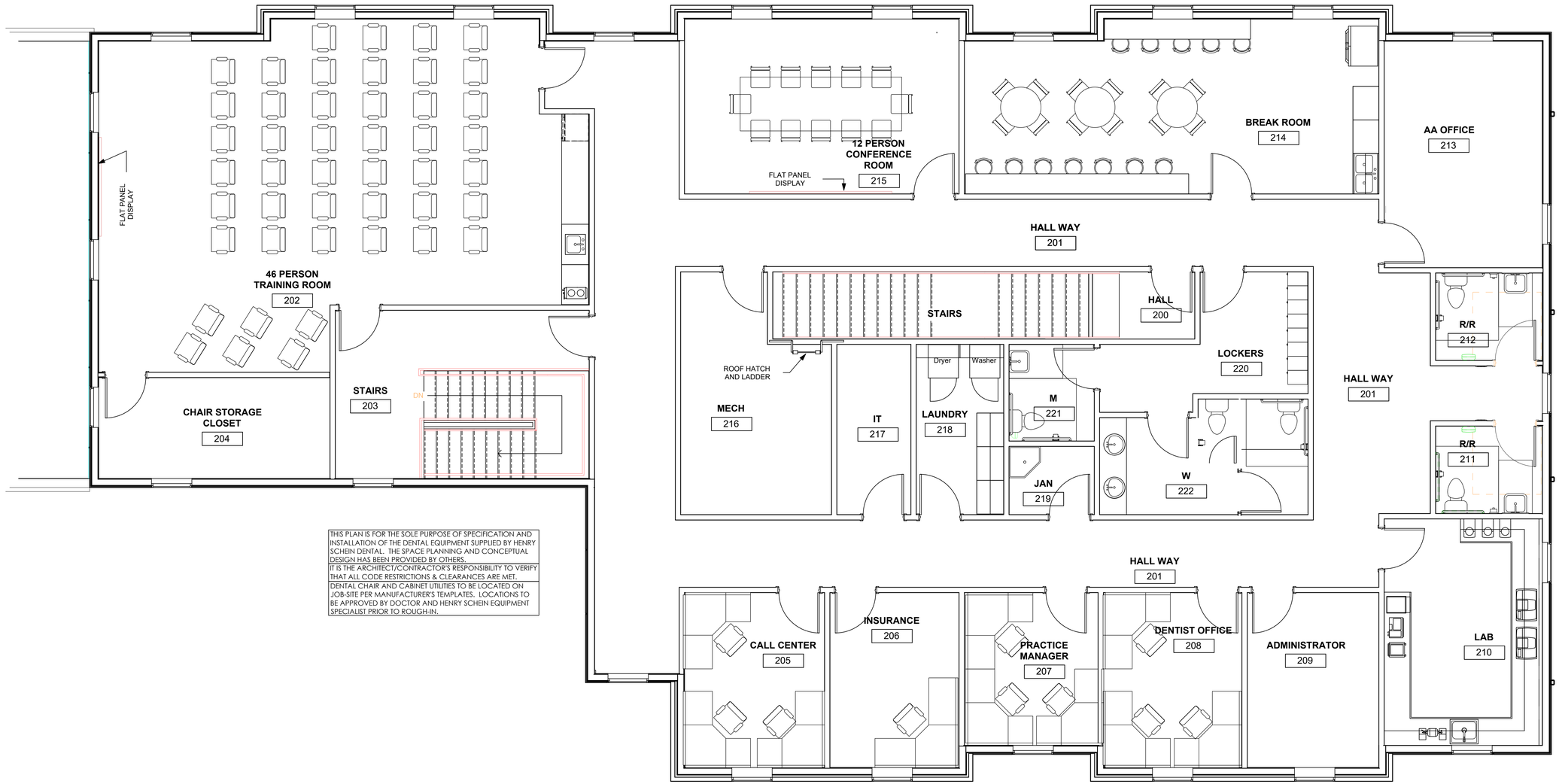

THIS PLAN IS FOR THE SOLE PURPOSE OF SPECIFICATION AND INSTALLATION OF THE DENTAL EQUIPMENT SUPPLIED BY HENRY SCHEIN DENTAL. THE SPACE PLANNING AND CONCEPTUAL DESIGN HAS BEEN PROVIDED BY OTHERS.

IT IS THE ARCHITECT/CONTRACTOR'S RESPONSIBILITY TO VERIFY THAT ALL CODE RESTRICTIONS & CLEARANCES ARE MET.

DENTAL CHAIR AND CABINET UTILITIES TO BE LOCATED ON JOB-SITE PER MANUFACTURER'S TEMPLATES. LOCATIONS TO BE APPROVED BY DOCTOR AND HENRY SCHEIN EQUIPMENT SPECIALIST PRIOR TO ROUGH-IN.

PROPOSED 2ND FLOOR PLAN

1/4"=1'-0"

HENRY SCHEIN®
INTEGRATED DESIGN STUDIO
10920 W LINCOLN AVE, WEST ALLIS, WI 53227
henryscheinintegratedesign.com

PROJECT: **DR. ALAN ARRINGTON**

LOCATION: 222 CHAMBLESS LN, HAMILTON, GA. 31811

HENRY SCHEIN REP: GEORGE HUMMERT

REGION: GA - GEORGIA

PHONE #: (678)-644-7519

-IMPORTANT NOTE-
THIS DOCUMENT HAS BEEN PREPARED AS AN INSTRUMENT OF PROFESSIONAL SERVICE AND **IS NOT AN ARCHITECTURAL PLAN.** THE IDEAS/ DESIGN INCLUDED HEREIN ARE THE SOLE PROPERTY OF HENRY SCHEIN, INC. AND ARE PROTECTED UNDER COPYRIGHT. THESE PLANS MAY NOT BE USED OR REPRODUCED WITHOUT EXPRESSED WRITTEN CONSENT OF HENRY SCHEIN, INC. AND FULL PAYMENT OF ANY ASSOCIATED DESIGN FEES. **ALL DIMENSIONS ARE SUBJECT TO JOB-SITE VERIFICATION.**

PROJECT NUMBER: 23-0142

PROJECT START DATE: 1/20/2023

FINALS START DATE: 1/20/2023

DRAWN BY: ARCH
FINALS BY: TJK
CHECKED BY: ANT

REVISIONS:

1/30/23	TJK
2/7/23	TJK
2/14/23	TJK
2/27/23	TJK
3/3/23	TJK
3/14/23	TJK
5/25/23	ARCH
--/--/--	---
--/--/--	---

INT.SQ.FT.= PER ARCH

SCALE: 1/4"=1'-0" | SHT. SIZE: 24 x 36

FLOOR PLAN

SA.2

© 2023 by HENRY SCHEIN, INC.

C:\Users\tom.king\OneDrive - Henry Schein, Inc\Shared Documents - Server_ALL REGIONS\GA Georgia\ARRINGTON_2023 Space\ARRINGTON-1\ARCH-F5

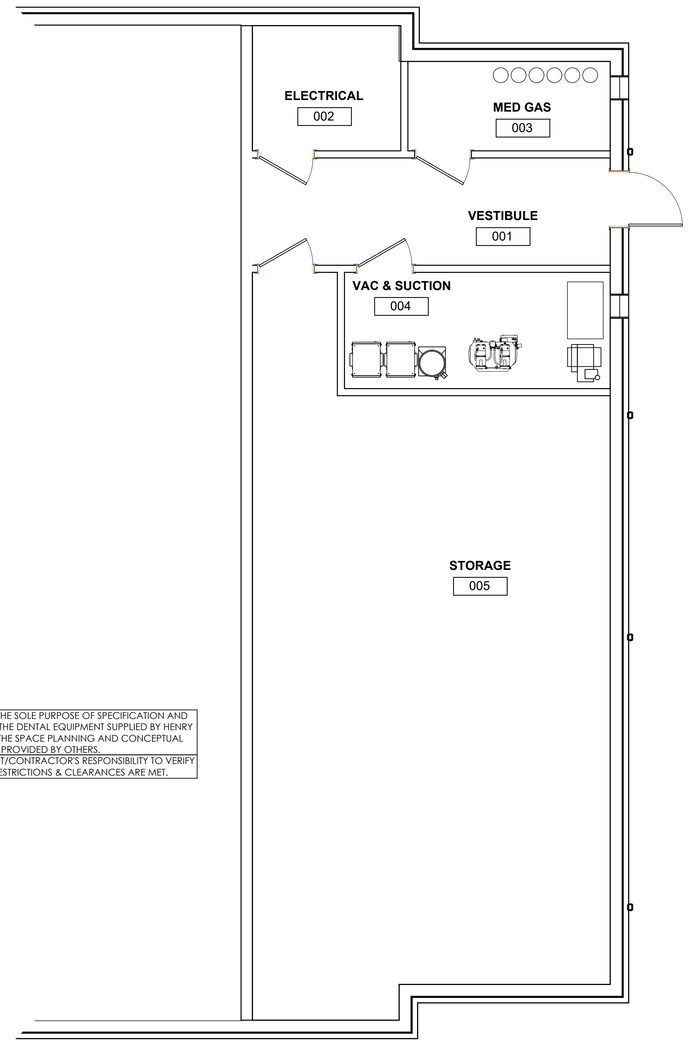

THIS PLAN IS FOR THE SOLE PURPOSE OF SPECIFICATION AND INSTALLATION OF THE DENTAL EQUIPMENT SUPPLIED BY HENRY SCHEIN DENTAL. THE SPACE PLANNING AND CONCEPTUAL DESIGN HAS BEEN PROVIDED BY OTHERS.
IT IS THE ARCHITECT/CONTRACTOR'S RESPONSIBILITY TO VERIFY THAT ALL CODE RESTRICTIONS & CLEARANCES ARE MET.

PROPOSED BASEMENT FLOOR PLAN

1/4"=1'-0"

HENRY SCHEIN®
INTEGRATED DESIGN STUDIO
10920 W LINCOLN AVE. WEST ALLIS, WI 53227
henryscheinintegrateddesign.com

PROJECT: **DR. ALAN ARRINGTON**

LOCATION: 222 CHAMBLESS LN.
HAMILTON, GA. 31811

HENRY SCHEIN REP:
GEORGE HUMMERT

REGION:
GA - GEORGIA

PHONE #:
(678)-644-7519

-IMPORTANT NOTE-
THIS DOCUMENT HAS BEEN PREPARED AS AN INSTRUMENT OF PROFESSIONAL SERVICE AND **IS NOT AN ARCHITECTURAL PLAN.** THE IDEAS/ DESIGN INCLUDED HEREIN ARE THE SOLE PROPERTY OF HENRY SCHEIN, INC. AND ARE PROTECTED UNDER COPYRIGHT. THESE PLANS MAY NOT BE USED OR REPRODUCED WITHOUT EXPRESSED WRITTEN CONSENT OF HENRY SCHEIN, INC. AND FULL PAYMENT OF ANY ASSOCIATED DESIGN FEES.
ALL DIMENSIONS ARE SUBJECT TO JOB-SITE VERIFICATION.

PROJECT NUMBER:
23-0142

PROJECT START DATE:
1/20/2023

FINALS START DATE:
1/20/2023

DRAWN BY: ARCH
FINALS BY: TJK
CHECKED BY: ANT

REVISIONS:

1/30/23	TJK
2/7/23	TJK
2/14/23	TJK
2/27/23	TJK
3/3/23	TJK
3/14/23	TJK
5/25/23	ARCH
--/--/--	---
--/--/--	---

INT.SQ.FT.= PER ARCH

SCALE: 1/4"=1'-0"
SHT. SIZE: 24 x 36

FLOOR PLAN

SA.3

© 2023 by HENRY SCHEIN, INC.

C:\Users\tom.king\OneDrive - Henry Schein, Inc\Shared Documents - Server_ALL REGIONS\GA Georgia\ARRINGTON, 2023 Space\ARRINGTON 1\ARCH.F5

FOLLOW LOCAL CODES FOR ALL WORK.
DETAIL PROVIDED FOR REFERENCE ONLY.

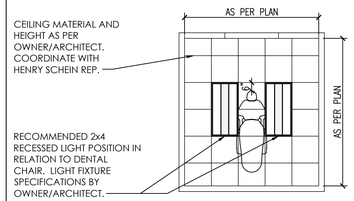

TYPICAL CEILING LAYOUT (TREATMENT ROOMS)
NOT TO SCALE

REINFORCEMENT SPECIFICATIONS

PLEASE NOTE: A LICENSED CONTRACTOR IS RESPONSIBLE FOR PROVIDING EQUIPMENT BLOCKING. ALL REQUIREMENTS TO BE VERIFIED BY MANUFACTURER'S SPEC SHEETS PROVIDED BY HENRY SCHEIN DENTAL EQUIPMENT SPECIALIST. MANUFACTURER'S SPECS SUPERSEDE ANY AND ALL INFORMATION CONTAINED HEREIN.

QUANTITY	SPEC. NUMBER	DESCRIPTION	DETAIL
13	9	WALL MOUNTED INTRAORAL X-RAY HEAD, ARM, AND WALL BRACKET - SUPPLIED AND INSTALLED BY HENRY SCHEIN DENTAL. BLOCKING & ELECTRICAL BY CONTRACTOR(S).	9
1	9C	PANORAMIC IMAGING UNIT (2D OR 3D) - SUPPLIED AND INSTALLED BY HENRY SCHEIN DENTAL. BLOCKING & ELECTRICAL BY CONTRACTOR(S). CONFIRM POWER REQUIREMENTS WITH HENRY SCHEIN DENTAL EQUIPMENT SPECIALIST.	9C
40	35	BLOCKING - UPPER & LOWER SUPPORT - CONTRACTOR TO SUPPLY AND INSTALL BACKING FOR WALL MOUNTED DENTAL UNITS & WALL HUNG CABINETS. SEE HENRY SCHEIN DENTAL EQUIPMENT SPECIALIST FOR EXACT LOCATION.	35
2	35A	BLOCKING - LOWER SUPPORT - CONTRACTOR TO SUPPLY AND INSTALL BACKING FOR WALL MOUNTED DENTAL UNITS & WALL HUNG CABINETS. SEE HENRY SCHEIN DENTAL EQUIPMENT SPECIALIST FOR EXACT LOCATION.	35A

CONSTRUCTION NOTES

1. THIS SPECIFICATION SHEET IS INTENDED AS A GUIDE FOR TRADESMEN. THE FLOOR PLANS ENCLOSED HEREIN ARE SUGGESTIONS FOR THE PLACEMENT OF DENTAL EQUIPMENT. THEY ARE NOT INTENDED FOR CONSTRUCTION.

2. VERIFY ALL DIMENSIONS WITH HENRY SCHEIN DENTAL REP. ON JOBSITE. ON SITE MODIFICATIONS MAY NEED TO BE DONE BY CONTRACTOR, BUT SHOULD BE VERIFIED BY ALL PARTIES INVOLVED.

3. 5/8" GYPSUM WALLBOARD IS RECOMMENDED THROUGHOUT THE OFFICE TO PROVIDE SOUND ATTENUATION & ADDITIONAL PROTECTION AGAINST X-RAY SCATTER RADIATION.

REINFORCEMENT LEGEND

OR

NEW REINFORCEMENT PLACED FOR WALL-MOUNTED EQUIPMENT. SEE "REINFORCEMENT SPECIFICATION SCHEDULE" FOR MORE INFORMATION.

SEE SHEETS SED.1 - SED.4 FOR DENTAL EQUIPMENT DETAILS

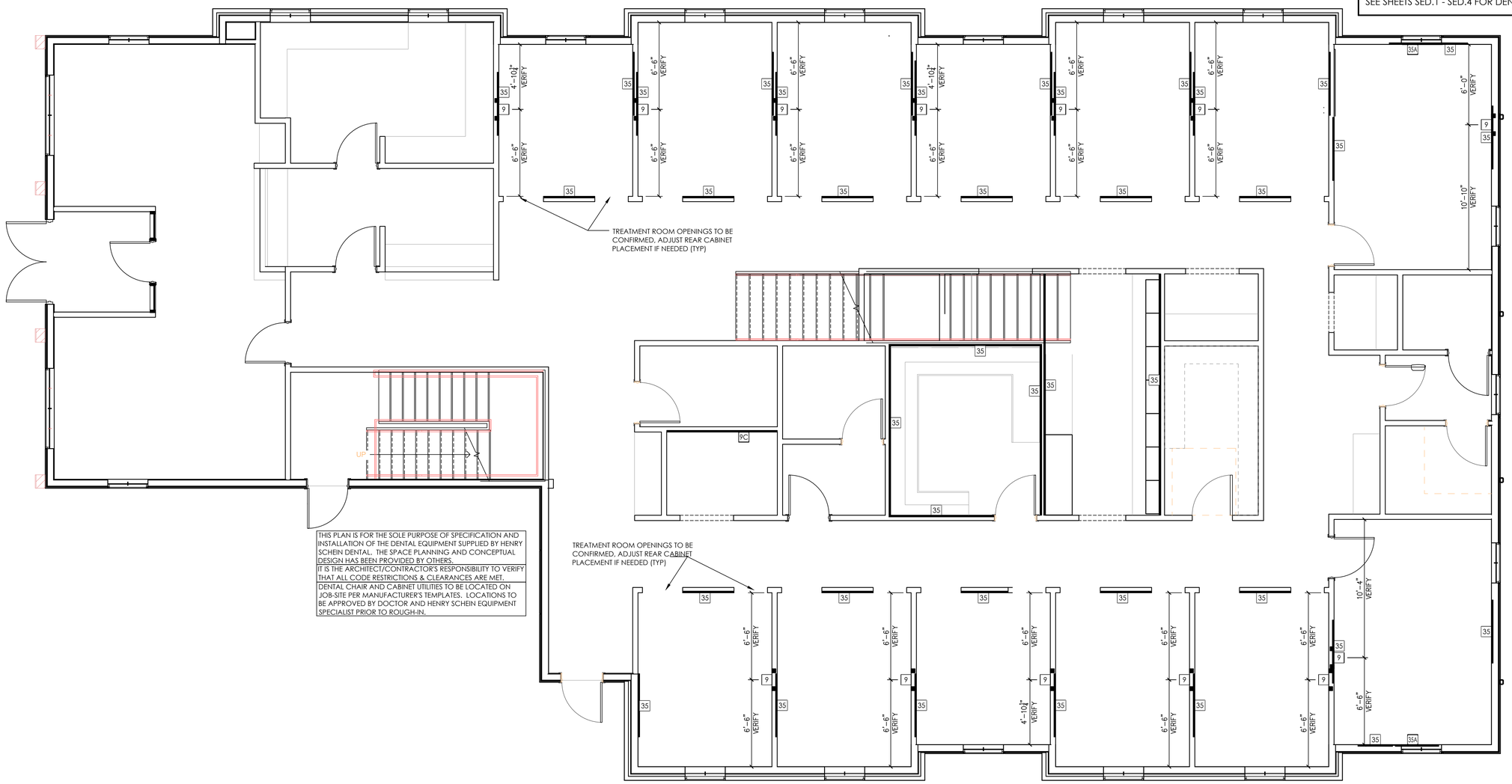

THIS PLAN IS FOR THE SOLE PURPOSE OF SPECIFICATION AND INSTALLATION OF THE DENTAL EQUIPMENT SUPPLIED BY HENRY SCHEIN DENTAL. THE SPACE PLANNING AND CONCEPTUAL DESIGN HAS BEEN PROVIDED BY OTHERS.
IT IS THE ARCHITECT/CONTRACTOR'S RESPONSIBILITY TO VERIFY THAT ALL CODE RESTRICTIONS & CLEARANCES ARE MET.
DENTAL CHAIR AND CABINET UTILITIES TO BE LOCATED ON JOB-SITE PER MANUFACTURER'S TEMPLATES. LOCATIONS TO BE APPROVED BY DOCTOR AND HENRY SCHEIN EQUIPMENT SPECIALIST PRIOR TO ROUGH-IN.

1ST FLOOR REINFORCEMENT SPECIFICATIONS
1/4"=1'-0"

HENRY SCHEIN®
INTEGRATED DESIGN STUDIO
10920 W LINCOLN AVE, WEST ALLIS, WI 53227
henryscheinintegratedesign.com

PROJECT: **DR. ALAN ARRINGTON**

LOCATION: 222 CHAMBLESS LN, HAMILTON, GA. 31811

HENRY SCHEIN REP: GEORGE HUMMERT

REGION: GA - GEORGIA

PHONE #: (678)-644-7519

-IMPORTANT NOTE-
THIS DOCUMENT HAS BEEN PREPARED AS AN INSTRUMENT OF PROFESSIONAL SERVICE AND **IS NOT AN ARCHITECTURAL PLAN.** THE IDEAS/ DESIGN INCLUDED HEREIN ARE THE SOLE PROPERTY OF HENRY SCHEIN, INC. AND ARE PROTECTED UNDER COPYRIGHT. THESE PLANS MAY NOT BE USED OR REPRODUCED WITHOUT EXPRESSED WRITTEN CONSENT OF HENRY SCHEIN, INC. AND FULL PAYMENT OF ANY ASSOCIATED DESIGN FEES. **ALL DIMENSIONS ARE SUBJECT TO JOB-SITE VERIFICATION.**

PROJECT NUMBER: 23-0142

PROJECT START DATE: 1/20/2023

FINALS START DATE: 1/20/2023

DRAWN BY: ARCH
FINALS BY: TJK
CHECKED BY: ANT

REVISIONS:

1/30/23	TJK
2/7/23	TJK
2/14/23	TJK
2/27/23	TJK
3/3/23	TJK
3/14/23	TJK
5/25/23	ARCH
--/--/--	---
--/--/--	---

INT.SQ.FT.= PER ARCH

SCALE: 1/4"=1'-0"
SHT. SIZE: 24 x 36

REINFORCEMENT PLAN

SR.1

© 2023 by HENRY SCHEIN, INC.

C:\Users\tonx.king\OneDrive - Henry Schein, Inc\Shared Documents - Server_ALL REGIONS\GA Georgia\ARRINGTON, 2023 Space\ARRINGTON, 1\ARCH.F5

FOLLOW LOCAL CODES FOR ALL WORK.
DETAIL PROVIDED FOR REFERENCE ONLY.

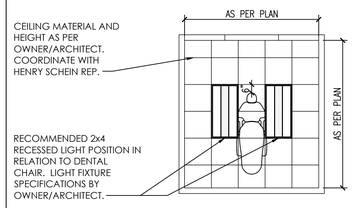

TYPICAL CEILING LAYOUT (TREATMENT ROOMS)
NOT TO SCALE

REINFORCEMENT SPECIFICATIONS

PLEASE NOTE: A LICENSED CONTRACTOR IS RESPONSIBLE FOR PROVIDING EQUIPMENT BLOCKING. ALL REQUIREMENTS TO BE VERIFIED BY MANUFACTURER'S SPEC SHEETS PROVIDED BY HENRY SCHEIN DENTAL EQUIPMENT SPECIALIST. MANUFACTURER'S SPECS SUPERSEDE ANY AND ALL INFORMATION CONTAINED HEREIN.

QUANTITY	SPEC. NUMBER	DESCRIPTION	DETAIL
5	35	BLOCKING - UPPER & LOWER SUPPORT - CONTRACTOR TO SUPPLY AND INSTALL BACKING FOR WALL MOUNTED DENTAL UNITS & WALL HUNG CABINETS. SEE HENRY SCHEIN DENTAL EQUIPMENT SPECIALIST FOR EXACT LOCATION.	35

CONSTRUCTION NOTES

1. THIS SPECIFICATION SHEET IS INTENDED AS A GUIDE FOR TRADESMEN. THE FLOOR PLANS ENCLOSED HEREIN ARE SUGGESTIONS FOR THE PLACEMENT OF DENTAL EQUIPMENT. THEY ARE NOT INTENDED FOR CONSTRUCTION.

2. VERIFY ALL DIMENSIONS WITH HENRY SCHEIN DENTAL REP. ON JOBSITE. ON SITE MODIFICATIONS MAY NEED TO BE DONE BY CONTRACTOR, BUT SHOULD BE VERIFIED BY ALL PARTIES INVOLVED.

3. 5/8" GYPSUM WALLBOARD IS RECOMMENDED THROUGHOUT THE OFFICE TO PROVIDE SOUND ATTENUATION & ADDITIONAL PROTECTION AGAINST X-RAY SCATTER RADIATION.

REINFORCEMENT LEGEND

OR

NEW REINFORCEMENT PLACED FOR WALL-MOUNTED EQUIPMENT. SEE "REINFORCEMENT SPECIFICATION SCHEDULE" FOR MORE INFORMATION.

SEE SHEETS SED.1 - SED.4 FOR DENTAL EQUIPMENT DETAILS

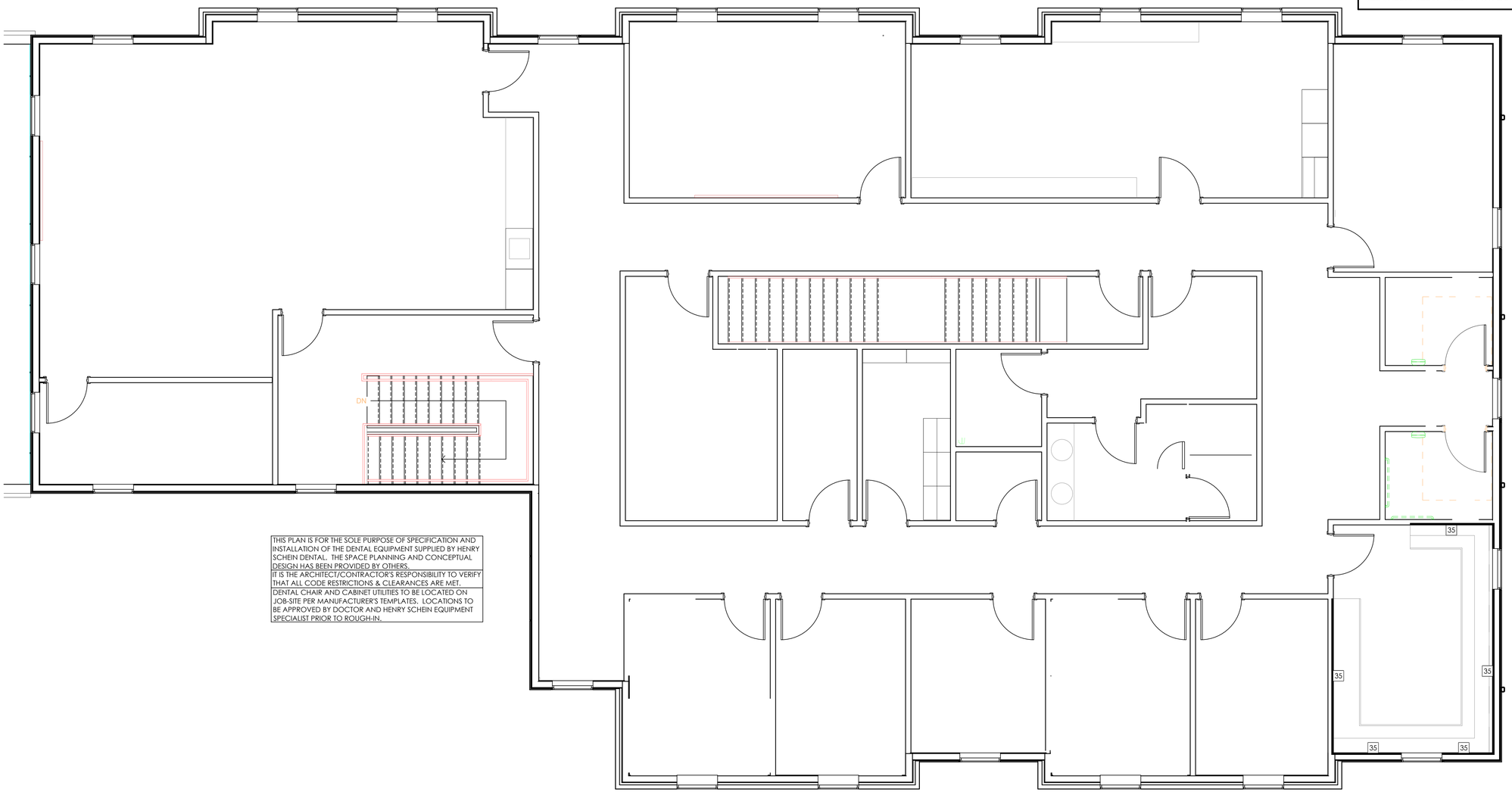

THIS PLAN IS FOR THE SOLE PURPOSE OF SPECIFICATION AND INSTALLATION OF THE DENTAL EQUIPMENT SUPPLIED BY HENRY SCHEIN DENTAL. THE SPACE PLANNING AND CONCEPTUAL DESIGN HAS BEEN PROVIDED BY OTHERS.
IT IS THE ARCHITECT/CONTRACTOR'S RESPONSIBILITY TO VERIFY THAT ALL CODE RESTRICTIONS & CLEARANCES ARE MET.
DENTAL CHAIR AND CABINET UTILITIES TO BE LOCATED ON JOB-SITE PER MANUFACTURER'S TEMPLATES. LOCATIONS TO BE APPROVED BY DOCTOR AND HENRY SCHEIN EQUIPMENT SPECIALIST PRIOR TO ROUGH-IN.

2ND FLOOR REINFORCEMENT SPECIFICATIONS
1/4"=1'-0"

HENRY SCHEIN®
INTEGRATED DESIGN STUDIO
10920 W LINCOLN AVE. WEST ALLIS, WI 53227
henryscheinintegratedesign.com

PROJECT: **DR. ALAN ARRINGTON**

LOCATION: 222 CHAMBLESS LN.
HAMILTON, GA. 31811

HENRY SCHEIN REP:
GEORGE HUMMERT

REGION:
GA - GEORGIA

PHONE #:
(678)-644-7519

-IMPORTANT NOTE-
THIS DOCUMENT HAS BEEN PREPARED AS AN INSTRUMENT OF PROFESSIONAL SERVICE AND **IS NOT AN ARCHITECTURAL PLAN.** THE IDEAS/ DESIGN INCLUDED HEREIN ARE THE SOLE PROPERTY OF HENRY SCHEIN, INC. AND ARE PROTECTED UNDER COPYRIGHT. THESE PLANS MAY NOT BE USED OR REPRODUCED WITHOUT EXPRESSED WRITTEN CONSENT OF HENRY SCHEIN, INC. AND FULL PAYMENT OF ANY ASSOCIATED DESIGN FEES.
ALL DIMENSIONS ARE SUBJECT TO JOB-SITE VERIFICATION.

PROJECT NUMBER:
23-0142

PROJECT START DATE:
1/20/2023

FINALS START DATE:
1/20/2023

DRAWN BY: ARCH
FINALS BY: TJK
CHECKED BY: ANT

REVISIONS:

1/30/23	TJK
2/7/23	TJK
2/14/23	TJK
2/27/23	TJK
3/3/23	TJK
3/14/23	TJK
5/25/23	ARCH
--/--/--	---
--/--/--	---

INT.SQ.FT.= PER ARCH

SCALE: 1/4"=1'-0"
SHT. SIZE: 24 x 36

REINFORCEMENT PLAN

SR.2

© 2023 by HENRY SCHEIN, INC.

C:\Users\tom.king\OneDrive - Henry Schein, Inc\Shared Documents - Sensei_ALL REGIONS\GA Georgia\ARRINGTON_2023 Sensei\ARRINGTON-1\ARCH-F5

PLEASE NOTE: A LICENSED CONTRACTOR IS RESPONSIBLE FOR PROVIDING EQUIPMENT BLOCKING. ALL REQUIREMENTS TO BE VERIFIED BY MANUFACTURER'S SPEC SHEETS PROVIDED BY HENRY SCHEIN DENTAL EQUIPMENT SPECIALIST. MANUFACTURER'S SPECS SUPERSEDE ANY AND ALL INFORMATION CONTAINED HEREIN.

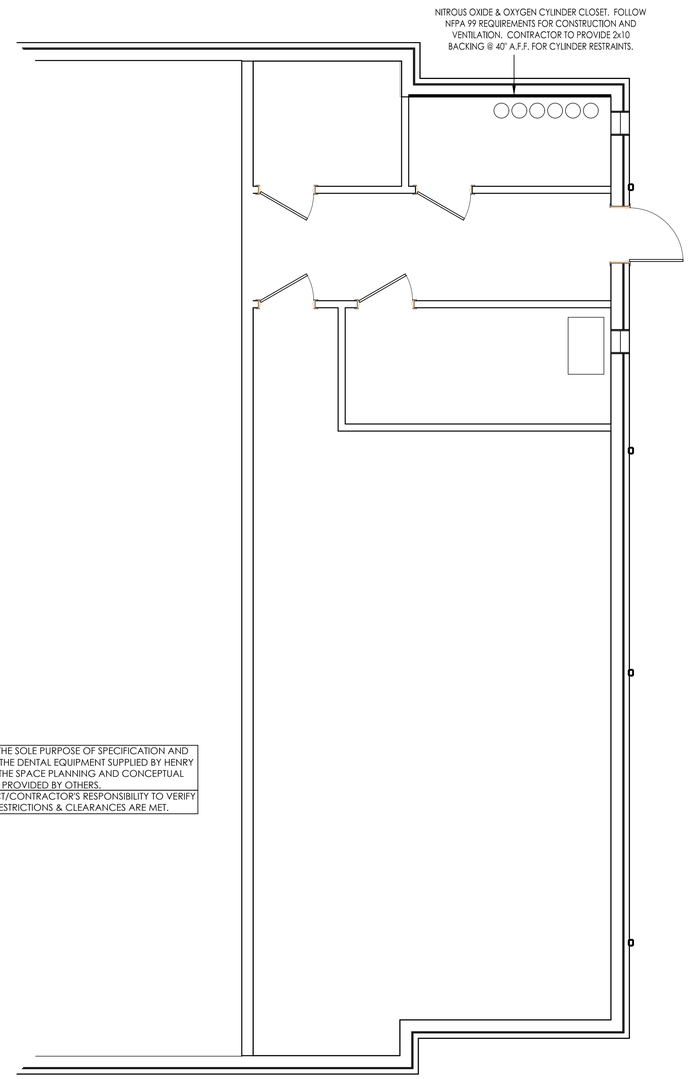

THIS PLAN IS FOR THE SOLE PURPOSE OF SPECIFICATION AND INSTALLATION OF THE DENTAL EQUIPMENT SUPPLIED BY HENRY SCHEIN DENTAL. THE SPACE PLANNING AND CONCEPTUAL DESIGN HAS BEEN PROVIDED BY OTHERS.
IT IS THE ARCHITECT/CONTRACTOR'S RESPONSIBILITY TO VERIFY THAT ALL CODE RESTRICTIONS & CLEARANCES ARE MET.

BASEMENT REINFORCEMENT SPECIFICATIONS

1/4"=1'-0"

CONSTRUCTION NOTES

1. THIS SPECIFICATION SHEET IS INTENDED AS A GUIDE FOR TRADESMEN. THE FLOOR PLANS ENCLOSED HEREIN ARE SUGGESTIONS FOR THE PLACEMENT OF DENTAL EQUIPMENT. THEY ARE NOT INTENDED FOR CONSTRUCTION.

2. VERIFY ALL DIMENSIONS WITH HENRY SCHEIN DENTAL REP. ON JOBSITE. ON SITE MODIFICATIONS MAY NEED TO BE DONE BY CONTRACTOR, BUT SHOULD BE VERIFIED BY ALL PARTIES INVOLVED.

3. 5/8" GYPSUM WALLBOARD IS RECOMMENDED THROUGHOUT THE OFFICE TO PROVIDE SOUND ATTENUATION & ADDITIONAL PROTECTION AGAINST X-RAY SCATTER RADIATION.

REINFORCEMENT LEGEND

NEW REINFORCEMENT PLACED FOR WALL-MOUNTED EQUIPMENT. SEE "REINFORCEMENT SPECIFICATION SCHEDULE" FOR MORE INFORMATION.

SEE SHEETS SED.1 - SED.4 FOR DENTAL EQUIPMENT DETAILS

HENRY SCHEIN®
INTEGRATED DESIGN STUDIO
10920 W LINCOLN AVE. WEST ALLIS, WI 53227
henryscheinintegratedadesign.com

PROJECT: **DR. ALAN ARRINGTON**

LOCATION: 222 CHAMBLESS LN. HAMILTON, GA. 31811

HENRY SCHEIN REP: GEORGE HUMMERT

REGION: GA - GEORGIA

PHONE #: (678)-644-7519

-IMPORTANT NOTE-
THIS DOCUMENT HAS BEEN PREPARED AS AN INSTRUMENT OF PROFESSIONAL SERVICE AND **IS NOT AN ARCHITECTURAL PLAN.** THE IDEAS/ DESIGN INCLUDED HEREIN ARE THE SOLE PROPERTY OF HENRY SCHEIN, INC. AND ARE PROTECTED UNDER COPYRIGHT. THESE PLANS MAY NOT BE USED OR REPRODUCED WITHOUT EXPRESSED WRITTEN CONSENT OF HENRY SCHEIN, INC. AND FULL PAYMENT OF ANY ASSOCIATED DESIGN FEES. **ALL DIMENSIONS ARE SUBJECT TO JOB-SITE VERIFICATION.**

PROJECT NUMBER: 23-0142

PROJECT START DATE: 1/20/2023

FINALS START DATE: 1/20/2023

DRAWN BY:	ARCH
FINALS BY:	TJK
CHECKED BY:	ANT

REVISIONS:

1/30/23	TJK
2/7/23	TJK
2/14/23	TJK
2/27/23	TJK
3/3/23	TJK
3/14/23	TJK
5/25/23	ARCH
--/--/--	---
--/--/--	---

INT.SQ.FT.= PER ARCH

SCALE: 1/4"=1'-0"	SHT. SIZE: 24 x 36

REINFORCEMENT PLAN

SR.3

© 2023 by HENRY SCHEIN, INC.

C:\Users\tom.king\OneDrive - Henry Schein, Inc\Shared Documents - Server_ALL REGIONS\GA Georgia\ARRINGTON_2023 Space\ARRINGTON_1\ARCH.F5

PLUMBING NOTES

1. THIS SPECIFICATION SHEET IS INTENDED AS A GUIDE FOR TRADESMEN. THE FLOOR PLANS ENCLOSED HEREIN ARE SUGGESTIONS FOR THE PLACEMENT OF DENTAL EQUIPMENT. THEY ARE NOT INTENDED FOR CONSTRUCTION.

2. EXACT EQUIPMENT LOCATIONS MUST BE JOB SITE VERIFIED BY THE HENRY SCHEIN DENTAL EQUIPMENT SPECIALIST.

3. FOLLOW MANUFACTURER'S TEMPLATES FOR EXACT REQUIREMENTS FOR ANY EQUIPMENT SUPPLIED BY HENRY SCHEIN DENTAL. CONSULT WITH HENRY SCHEIN DENTAL REP FOR ADDITIONAL INFORMATION.

4. DENTAL AIR IS SUPPLIED THROUGH USE OF A DENTAL AIR COMPRESSOR/SUPPLY SYSTEM AND IS PERMITTED TO BE USED AS A SUPPORT GAS FOR DRIVING DENTAL TOOLS AND SUPPLYING AIR-DRIVEN EQUIPMENT AS DESCRIBED WITHIN NFPA 99. DENTAL AIR IS NOT A MEDICAL GAS.

5. WATER PRESSURE MUST NOT EXCEED 50 PS1 AT ALL DENTAL UNITS.

6. ALL PLUMBING MUST CONFORM TO LOCAL PREVAILING CODES.

7. REFER TO ARCHITECT'S DRAWINGS FOR PLUMBING REQUIREMENTS IN ALL AREAS NOT INDICATED ON THIS PLAN.

ALL DIMENSIONS NOTED ON PLAN ARE TO THE CENTERLINE OF PLUMBING OR UTILITY CENTER (UNLESS SHOWN OTHERWISE)

SEE SHEETS SED.1 - SED.4 FOR DENTAL EQUIPMENT DETAILS

IMPORTANT NOTE REGARDING DENTAL GAS SYSTEMS

THIS SET OF DRAWINGS INCLUDES SPECIFICATIONS RELATING TO NITROUS OXIDE AND OXYGEN SYSTEMS DESIGNED FOR FACILITIES WHERE MINIMAL TO MODERATE SEDATION (AS DEFINED BY NFPA 99) MAY BE PERFORMED. IF THE OFFICE WILL BE PERFORMING DEEP SEDATION OR GENERAL ANESTHESIA, THE OFFICE AND SYSTEM COMPONENTS MUST COMPLY WITH THE LOCALLY ACCEPTED NFPA 99 CODES RELATING TO THAT CATEGORY OF FACILITY. CONSULT YOUR LOCAL N2O/O2 SYSTEM MANUFACTURER REP FOR MORE INFORMATION.

VACUUM NOTES

THE VACUUM PIPING LAYOUT HAS A LARGE EFFECT ON THE EFFICIENCY AND RELIABILITY OF THE DENTAL VACUUM SYSTEM. REFER TO MANUFACTURER'S PRE-INSTALLATION GUIDE PROVIDED BY HENRY SCHEIN EQUIPMENT SPECIALIST (FOR SPECIFIC SIZING OF STUB-UP, TRUNK, AND BRANCH LINES.

IT IS HIGHLY RECOMMENDED THAT VACUUM LINES RUN UNDERNEATH DENTAL EQUIPMENT BY MEANS OF TRENCHING/ CORING (CONCRETE SLAB) OR IN SUB FLOOR (BASEMENT/ CRAWL SPACE). ALL LINES ARE TO BE DESIGNED WITH PVC PIPING UNLESS DICTATED BY LOCAL CODES TO USE COPPER OR CAST IRON.

TO ENSURE OPTIMUM VACUUM PERFORMANCE, INSTALL MAIN LINE DIRECTLY BELOW THE DENTAL CHAIR. CABINET OR WALL JUNCTION BOX TO REDUCE OR ELIMINATE BRANCH LINE RUNS WHEREVER POSSIBLE.

I. STUB-UP
TERMINATE VACUUM TRUNK LINE IN MECHANICAL ROOM. PLUMBING CONTRACTOR TO PROVIDE FPT ADAPTOR ON END OF STUB-OUT FROM FLOOR OR WALL. SIZE OF ADAPTOR TO BE DETERMINED BY TRUNK AND PUMP INTAKE PIPE SIZES. SEE DETAILS THIS SET & MANUFACTURER TEMPLATES PROVIDED BY HENRY SCHEIN EQUIPMENT REP. IN THE CASE OF DUAL TRUNK LINE SYSTEM, PROVIDE ENOUGH SPACE BETWEEN STUB-UPS TO INSTALL TEES ON BOTH LINES.

2. TRUNK LINE(S)
VACUUM TRUNK LINES(S) TO BE SUPPORTED EVERY 6'-0" TO PREVENT SAG AND SLOPED A MINIMUM OF 1/4" PER 10'-0" TOWARD THE VACUUM PUMP.

3. BRANCH LINE(S)
BRANCH LINES ARE TO HAVE "SWEEPING" 90 DEGREE TURNS TO AVOID VACUUM LOSS. A "WYE" FITTING SHOULD BE USED TO JOIN BRANCH LINES TO THE TRUNK LINE.

BRANCH LINE CONFIGURATION

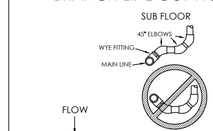

DETAIL A
WYE FITTING (USE FOR ALL SUB FLOOR INTERSECTIONS)

DO NOT PIPE TRUNK LINE IN A SERIES MANNER LOOPING FROM J-BOX TO J-BOX. A CONTINUOUS TRUNK LINE MUST BE MAINTAINED FROM THE PUMP TO THE FURTHEST J-BOX USING BRANCH LINES OFF OF THE TRUNK LINE TO PICK UP EACH VACUUM OUTLET. TRUNK LINE MAY FOLLOW DRAIN LINE TRENCHES WITHIN REASON. USE ONLY 45 DEGREE EL'S. DO NOT USE ANY 90 DEGREE EL'S. ALL SUB FLOOR SCH 40 PVC CONNECTIONS ARE TO BE PLUMBED WITH 45 DEGREE EL'S USING DETAIL A FOR TEEING BRANCH LINE CONNECTIONS INTO TRUNK LINE.

SPECIAL NOTE:
IF VACUUM LINES ENCROACH ON EITHER A WALL OR COLUMN FOOTING, USE 45 DEGREE ELBOWS TO PIPE AROUND FOOTING SO PIPE REACHES PROPER LOCATION.

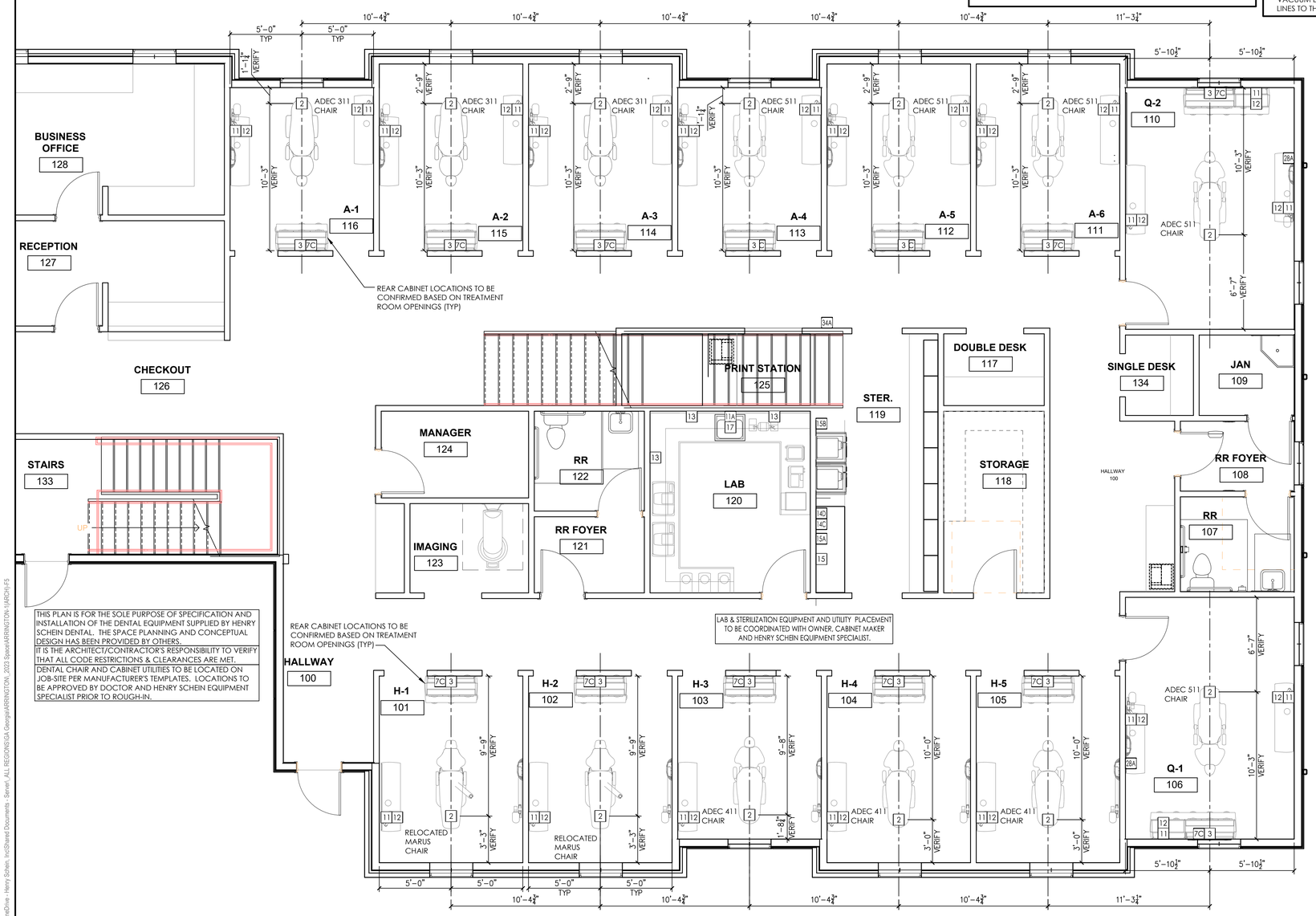

THIS PLAN IS FOR THE SOLE PURPOSE OF SPECIFICATION AND INSTALLATION OF THE DENTAL EQUIPMENT SUPPLIED BY HENRY SCHEIN DENTAL. THE SPACE PLANNING AND CONCEPTUAL DESIGN HAS BEEN PROVIDED BY OTHERS.
IT IS THE ARCHITECT/CONTRACTOR'S RESPONSIBILITY TO VERIFY THAT ALL CODE RESTRICTIONS & CLEARANCES ARE MET.
DENTAL CHAIR AND CABINET UTILITIES TO BE LOCATED ON JOB-SITE PER MANUFACTURER'S TEMPLATES. LOCATIONS TO BE APPROVED BY DOCTOR AND HENRY SCHEIN EQUIPMENT SPECIALIST PRIOR TO ROUGH-IN.

PROPOSED 1ST FLOOR PLUMBING PLAN

1/4"=1'-0"

PLUMBING SPECIFICATIONS

PLEASE NOTE: A LICENSED PLUMBING CONTRACTOR IS RESPONSIBLE FOR PROVIDING ALL REQUIRED UTILITIES. ALL REQUIREMENTS TO BE VERIFIED BY MANUFACTURER'S SPEC SHEETS PROVIDED BY HENRY SCHEIN DENTAL EQUIPMENT SPECIALIST. MANUFACTURER'S SPECS SUPERSEDE ANY AND ALL INFORMATION CONTAINED HEREIN.

QUANTITY	SPEC. NUMBER	DESCRIPTION	UTILITIES: COLD WATER	HOT WATER	DRAIN	COMPRESSED AIR	NATURAL GAS	VACUUM	N2O	OXYGEN	NITROGEN	VENT	DETAIL
2	2	MARUS CHAIR UTILITY CENTER – SEE DETAIL(S). ALL UTILITIES MUST CONFORM TO PREVAILING LOCAL CODES.	•			•							2
3	2	ADEC 411 CHAIR UTILITY CENTER – SEE DETAIL(S). ALL UTILITIES MUST CONFORM TO PREVAILING LOCAL CODES.	•			•							2
5	2	ADEC 511 CHAIR UTILITY CENTER – SEE DETAIL(S). ALL UTILITIES MUST CONFORM TO PREVAILING LOCAL CODES.	•			•							2
3	2	ADEC 311 CHAIR UTILITY CENTER – SEE DETAIL(S). ALL UTILITIES MUST CONFORM TO PREVAILING LOCAL CODES.	•			•							2
13	3	CABINET UTILITY CENTER – SEE DETAIL(S). ALL UTILITIES MUST CONFORM TO PREVAILING LOCAL CODES.	•			•		•					3
13	7C	N2O, O2 CHECK VALVES & VACUUM LINE – CHECK VALVES SUPPLIED BY HENRY SCHEIN DENTAL. GAS LINES & CHECK VALVES INSTALLED BY ASSE 6010 CERTIFIED PLUMBER. SILVER SOLDERED TYPE K OR L COPPER GAS LINES RUN TO LOCATION SHOWN FROM MANIFOLD (33) OR EMERGENCY SHUT-OFF VALVE (34A) DEPENDING ON CODE. 1/2" VACUUM BRANCH LINE FROM MAIN TRUNK LINE BY PLUMBER. LOCATIONS SHOWN ON UTILITY CENTER DETAIL(S). VERIFIED BY HENRY SCHEIN REP. FOLLOW NFPA 99 CODES.						•	•	•			7C
23	11	MODULAR SINKS & FAUCETS - SINK AND FAUCET SUPPLIED BY HENRY SCHEIN DENTAL, INSTALLED BY PLUMBER. FINAL CONNECTIONS BY PLUMBER.	•	•	•								
1	11A	STANDARD SINK & FAUCET - PLUMBER TO PROVIDE AND INSTALL SINK AND FAUCET. MANUFACTURER AND STYLE DETERMINED BY OWNER. FINAL CONNECTIONS BY PLUMBER.	•	•	•								
23	12	AIR POWERED SINK CONTROL - FROM (12) TO (11). SUPPLIED BY HENRY SCHEIN DENTAL, INSTALLED BY PLUMBER.				•							
3	13	COMPRESSED AIR LINE AND VALVE – ½" AIR LINE FROM COMPRESSOR (25) BY PLUMBER. TERMINATE WITH A 3/8" ANGLE VALVE.				•							13
1	14C	MODULAR STERILZATION CENTER - STERI-CENTER SUPPLIED AND INSTALLED BY HENRY SCHEIN DENTAL. CONTRACTOR TO PROVIDE UTILITIES PER MANUFACTURER'S SPECIFICATIONS. EXACT LOCATIONS TO BE CONFIRMED ON-SITE BY HENRY SCHEIN DENTAL EQUIPMENT SPECIALIST. FINAL CONNECTIONS BY CONTRACTOR(S).	•	•	•	•		•			•		14C
1	14D	VISTACOOL DIRECT-TO-DRAIN SYSTEM - SUPPLIED AND INSTALLED BY HENRY SCHEIN DENTAL. TIE INTO EXISTING SINK DRAIN AND COLD WATER LINE WHERE POSSIBLE. SYSTEM SHOULD BE INSTALLED IN SINK CABINET DOWNHILL FROM STATIM (14) AND UPHILL FROM CONNECTION TO DRAIN. A REMOTE WATER CONTROL VALVE IS RECOMMENDED ON FACILITY WATER LINE WHEN USING THIS SYSTEM.	•		•								14D
1	15	ULTRASONIC CLEANER - FOR EQUIPMENT LOCATION ONLY. CONTRACTOR TO PROVIDE REQ'D UTILITIES FOR STERILIZATION CENTER AT 14C LOCATION. CLEANER SUPPLIED AND INSTALLED BY HENRY SCHEIN DENTAL. CONNECTS TO SINK DRAIN.			•								14C
1	15A	WASHER DISINFECTOR - FOR EQUIPMENT LOCATION ONLY. CONTRACTOR TO PROVIDE REQ'D UTILITIES FOR STERILIZATION CENTER AT 14C LOCATION . WASHER SUPPLIED AND INSTALLED BY HENRY SCHEIN DENTAL.	•	•	•								15A
1	15B	HANDPIECE MAINTENANCE SYSTEM - FOR EQUIPMENT LOCATION ONLY. CONTRACTOR TO PROVIDE REQ'D UTILITIES FOR STERILIZATION CENTER AT 14C LOCATION. SYSTEM SUPPLIED AND INSTALLED BY HENRY SCHEIN DENTAL.				•							14C
1	17	PLASTER TRAP - SUPPLIED BY HSD, INSTALLED BY PLUMBER ON SINK DRAIN LINE. DRAIN LINE MUST BE 21" A.F.F.			•								17
2	28A	VACUUM OUTLET STATION (QUICK CONNECT) - PLUMBER TO PROVIDE 1/2" COPPER LINE (OR PER MFR SPECS) FROM VACUUM TRUNK LINE. QUICK CONNECT OUTLET SUPPLIED BY HENRY SCHEIN DENTAL, INSTALLED BY PLUMBER. VERIFY HEIGHT AND LOCATION WITH HENRY SCHEIN DENTAL EQUIPMENT SPECIALIST. LIQUIDS ARE NOT PERMITTED.						•					28A
1	34A	NITROUS OXIDE & OXYGEN EMERGENCY SHUT-OFF VALVE - SUPPLIED BY HENRY SCHEIN DENTAL. INSTALLED BY ASSE 6010 CERTIFIED PLUMBER ON BRANCH LINES BETWEEN MANIFOLD & TREATMENT ROOMS. SILVER SOLDERED TYPE K OR L COPPER LINES ONLY. FOLLOW NFPA 99 CODES.							•	•			34A

HENRY SCHEIN®
INTEGRATED DESIGN STUDIO
10920 W LINCOLN AVE. WEST ALLIS, WI 53227
hsnyscheinintegratedesign.com

PROJECT: **DR. ALAN ARRINGTON**

LOCATION: 222 CHAMBLESS LN. HAMILTON, GA. 31811

HENRY SCHEIN REP: GEORGE HUMMERT

REGION: GA - GEORGIA

PHONE #: (678)-644-7519

-IMPORTANT NOTE-
THIS DOCUMENT HAS BEEN PREPARED AS AN INSTRUMENT OF PROFESSIONAL SERVICE AND **IS NOT AN ARCHITECTURAL PLAN.** THE IDEAS/ DESIGN INCLUDED HEREIN ARE THE SOLE PROPERTY OF HENRY SCHEIN, INC. AND ARE PROTECTED UNDER COPYRIGHT. THESE PLANS MAY NOT BE USED OR REPRODUCED WITHOUT EXPRESSED WRITTEN CONSENT OF HENRY SCHEIN, INC. AND FULL PAYMENT OF ANY ASSOCIATED DESIGN FEES. **ALL DIMENSIONS ARE SUBJECT TO JOB-SITE VERIFICATION.**

PROJECT NUMBER: 23-0142

PROJECT START DATE: 1/20/2023

FINALS START DATE: 1/20/2023

DRAWN BY: ARCH
FINALS BY: TJK
CHECKED BY: ANT

REVISIONS:

1/30/23	TJK
2/7/23	TJK
2/14/23	TJK
2/27/23	TJK
3/3/23	TJK
3/14/23	TJK
5/25/23	ARCH
--/--/--	---
--/--/--	---

INT.SQ.FT.= PER ARCH

SCALE: 1/4"=1'-0"
SHT. SIZE: 24 x 36

DENTAL PLUMBING PLAN

SP.1

© 2023 by HENRY SCHEIN, INC.

C:\Users\tom.kory\OneDrive - Henry Schein, Inc\Shared Documents - Sarnell_ALL REGIONS\GA Georgia\ARRINGTON, 2023 Space\ARRINGTON-1\ARCH-F5

IMPORTANT NOTE REGARDING DENTAL GAS SYSTEMS

THIS SET OF DRAWINGS INCLUDES SPECIFICATIONS RELATING TO NITROUS OXIDE AND OXYGEN SYSTEMS DESIGNED FOR FACILITIES WHERE MINIMAL TO MODERATE SEDATION (AS DEFINED BY NFPA 99) MAY BE PERFORMED. IF THE OFFICE WILL BE PERFORMING DEEP SEDATION OR GENERAL ANESTHESIA, THE OFFICE AND SYSTEM COMPONENTS MUST COMPLY WITH THE LOCALLY ACCEPTED NFPA 99 CODES RELATING TO THAT CATEGORY OF FACILITY. CONSULT YOUR LOCAL N2O/O2 SYSTEM MANUFACTURER REP FOR MORE INFORMATION.

PLUMBING SPECIFICATIONS

PLEASE NOTE: A LICENSED PLUMBING CONTRACTOR IS RESPONSIBLE FOR PROVIDING ALL REQUIRED UTILITIES. ALL REQUIREMENTS TO BE VERIFIED BY MANUFACTURER'S SPEC SHEETS PROVIDED BY HENRY SCHEIN DENTAL EQUIPMENT SPECIALIST. MANUFACTURER'S SPECS SUPERSEDE ANY AND ALL INFORMATION CONTAINED HEREIN.

QUANTITY	SPEC. NUMBER	DESCRIPTION	UTILITIES: COLD WATER	HOT WATER	DRAIN	COMPRESSED AIR	NATURAL GAS	VACUUM	N2O	OXYGEN	NITROGEN	VENT	DETAIL
1	11A	STANDARD SINK & FAUCET - PLUMBER TO PROVIDE AND INSTALL SINK AND FAUCET. MANUFACTURER AND STYLE DETERMINED BY OWNER. FINAL CONNECTIONS BY PLUMBER.	•	•	•								
2	13	COMPRESSED AIR LINE AND VALVE – ½" AIR LINE FROM COMPRESSOR (25) BY PLUMBER. TERMINATE WITH A 3/8" ANGLE VALVE.				•							13
1	16	MODEL TRIMMER - SUPPLIED AND INSTALLED BY HENRY SCHEIN DENTAL. DO NOT TIE INTO COLD WATER LINE FOR SINK. SEE DETAIL.	•		•								16
1	17	PLASTER TRAP - SUPPLIED BY HSD, INSTALLED BY PLUMBER ON SINK DRAIN LINE. DRAIN LINE MUST BE 21" A.F.F.			•								16
2	20A	CAD/CAM MILL – SUPPLIED AND INSTALLED BY HENRY SCHEIN DENTAL. 2'-6" CLEARANCE REQUIRED BETWEEN COUNTERTOP AND UPPER CABINETS. UTILITIES BY CONTRACTOR(S). SEE DETAIL.			•								20A

PLUMBING NOTES

1. THIS SPECIFICATION SHEET IS INTENDED AS A GUIDE FOR TRADESMEN. THE FLOOR PLANS ENCLOSED HEREIN ARE SUGGESTIONS FOR THE PLACEMENT OF DENTAL EQUIPMENT. THEY ARE NOT INTENDED FOR CONSTRUCTION.

2. EXACT EQUIPMENT LOCATIONS MUST BE JOB SITE VERIFIED BY THE HENRY SCHEIN DENTAL EQUIPMENT SPECIALIST.

3. FOLLOW MANUFACTURER'S TEMPLATES FOR EXACT REQUIREMENTS FOR ANY EQUIPMENT SUPPLIED BY HENRY SCHEIN DENTAL. CONSULT WITH HENRY SCHEIN DENTAL REP FOR ADDITIONAL INFORMATION.

4. DENTAL AIR IS SUPPLIED THROUGH USE OF A DENTAL AIR COMPRESSOR/SUPPLY SYSTEM AND IS PERMITTED TO BE USED AS A SUPPORT GAS FOR DRIVING DENTAL TOOLS AND SUPPLYING AIR-DRIVEN EQUIPMENT AS DESCRIBED WITHIN NFPA 99. DENTAL AIR IS NOT A MEDICAL GAS.

5. WATER PRESSURE MUST NOT EXCEED 50 PS1 AT ALL DENTAL UNITS.

6. ALL PLUMBING MUST CONFORM TO LOCAL PREVAILING CODES.

7. REFER TO ARCHITECT'S DRAWINGS FOR PLUMBING REQUIREMENTS IN ALL AREAS NOT INDICATED ON THIS PLAN.

ALL DIMENSIONS NOTED ON PLAN ARE TO THE CENTERLINE OF PLUMBING OR UTILITY CENTER (UNLESS SHOWN OTHERWISE)

SEE SHEETS SED.1 - SED.4 FOR DENTAL EQUIPMENT DETAILS

VACUUM NOTES

THE VACUUM PIPING LAYOUT HAS A LARGE EFFECT ON THE EFFICIENCY AND RELIABILITY OF THE DENTAL VACUUM SYSTEM. REFER TO MANUFACTURER'S PRE-INSTALLATION GUIDE PROVIDED BY HENRY SCHEIN EQUIPMENT SPECIALIST (FOR SPECIFIC SIZING OF STUB-UP, TRUNK, AND BRANCH LINES.

IT IS HIGHLY RECOMMENDED THAT VACUUM LINES RUN UNDERNEATH DENTAL EQUIPMENT BY MEANS OF TRENCHING/ CORING (CONCRETE SLAB) OR IN SUB FLOOR (BASEMENT/ CRAWL SPACE). ALL LINES ARE TO BE DESIGNED WITH PVC PIPING UNLESS DICTATED BY LOCAL CODES TO USE COPPER OR CAST IRON.

TO ENSURE OPTIMUM VACUUM PERFORMANCE, INSTALL MAIN LINE DIRECTLY BELOW THE DENTAL CHAIR. CABINET OR WALL JUNCTION BOX TO REDUCE OR ELIMINATE BRANCH LINE RUNS WHEREVER POSSIBLE.

I. STUB-UP
TERMINATE VACUUM TRUNK LINE IN MECHANICAL ROOM. PLUMBING CONTRACTOR TO PROVIDE FPT ADAPTOR ON END OF STUB-OUT FROM FLOOR OR WALL. SIZE OF ADAPTOR TO BE DETERMINED BY TRUNK AND PUMP INTAKE PIPE SIZES. SEE DETAILS THIS SET & MANUFACTURER TEMPLATES PROVIDED BY HENRY SCHEIN EQUIPMENT REP. IN THE CASE OF DUAL TRUNK LINE SYSTEM, PROVIDE ENOUGH SPACE BETWEEN STUB-UPS TO INSTALL TEES ON BOTH LINES.

2. TRUNK LINE(S)
VACUUM TRUNK LINES(S) TO BE SUPPORTED EVERY 6'-0" TO PREVENT SAG AND SLOPED A MINIMUM OF 1/4" PER 10'-0" TOWARD THE VACUUM PUMP.

3. BRANCH LINE(S)
BRANCH LINES ARE TO HAVE "SWEEPING" 90 DEGREE TURNS TO AVOID VACUUM LOSS. A "WYE" FITTING SHOULD BE USED TO JOIN BRANCH LINES TO THE TRUNK LINE.

BRANCH LINE CONFIGURATION

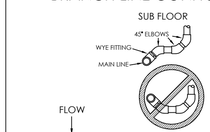

DETAIL A
WYE FITTING (USE FOR ALL SUB FLOOR INTERSECTIONS)

DO NOT PIPE TRUNK LINE IN A SERIES MANNER LOOPING FROM J-BOX TO J-BOX. A CONTINUOUS TRUNK LINE MUST BE MAINTAINED FROM THE PUMP TO THE FURTHEST J-BOX USING BRANCH LINES OFF OF THE TRUNK LINE TO PICK UP EACH VACUUM OUTLET. TRUNK LINE MAY FOLLOW DRAIN LINE TRENCHES WITHIN REASON. USE ONLY 45 DEGREE EL'S. DO NOT USE ANY 90 DEGREE EL'S. ALL SUB FLOOR SCH 40 PVC CONNECTIONS ARE TO BE PLUMBED WITH 45 DEGREE EL'S USING DETAIL A FOR TEEING BRANCH LINE CONNECTIONS INTO TRUNK LINE.

SPECIAL NOTE:
IF VACUUM LINES ENCROACH ON EITHER A WALL OR COLUMN FOOTING, USE 45 DEGREE ELBOWS TO PIPE AROUND FOOTING SO PIPE REACHES PROPER LOCATION.

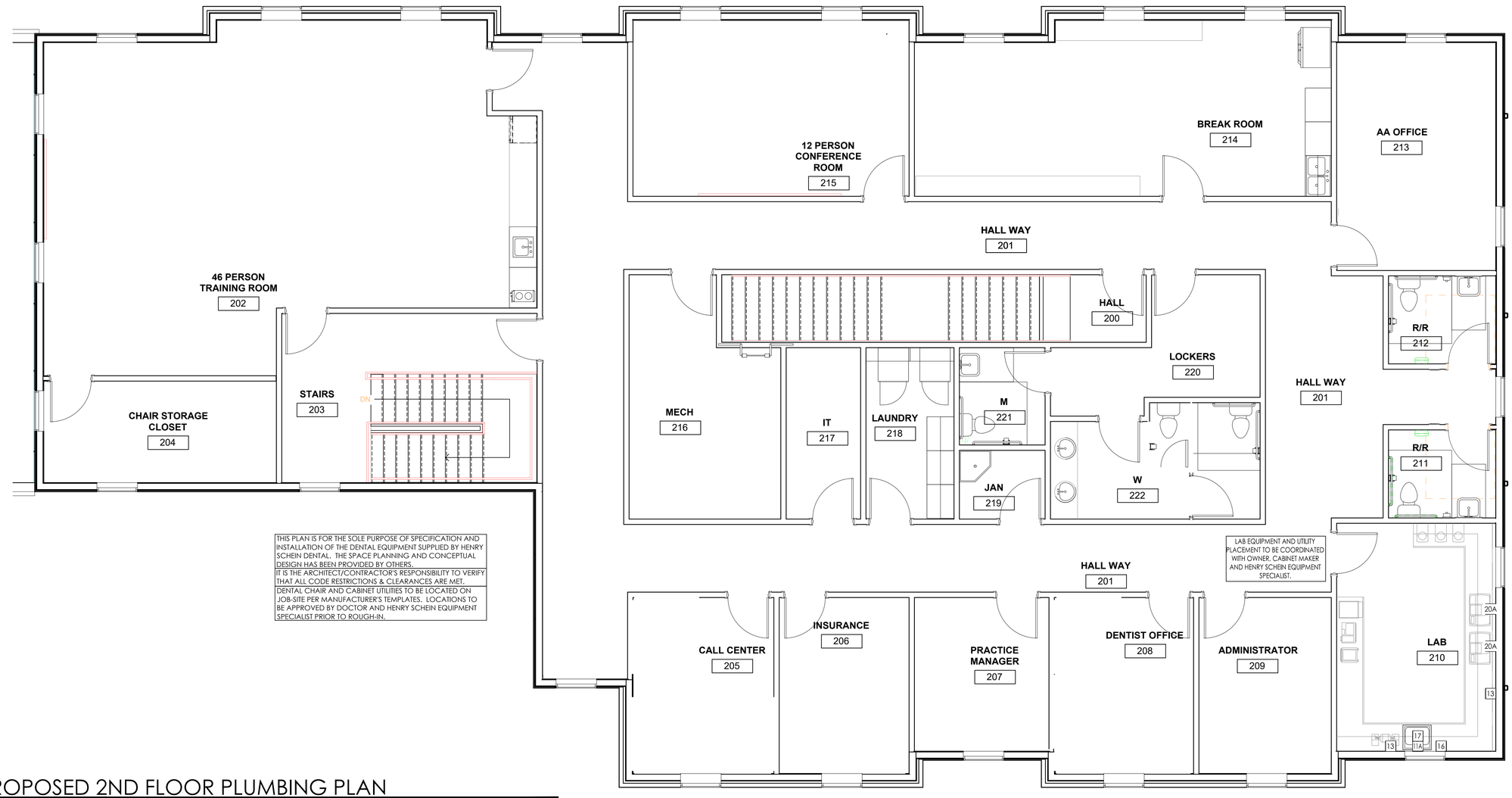

THIS PLAN IS FOR THE SOLE PURPOSE OF SPECIFICATION AND INSTALLATION OF THE DENTAL EQUIPMENT SUPPLIED BY HENRY SCHEIN DENTAL. THE SPACE PLANNING AND CONCEPTUAL DESIGN HAS BEEN PROVIDED BY OTHERS.

IT IS THE ARCHITECT/CONTRACTOR'S RESPONSIBILITY TO VERIFY THAT ALL CODE RESTRICTIONS & CLEARANCES ARE MET.

DENTAL CHAIR AND CABINET UTILITIES TO BE LOCATED ON JOB-SITE PER MANUFACTURER'S TEMPLATES. LOCATIONS TO BE APPROVED BY DOCTOR AND HENRY SCHEIN EQUIPMENT SPECIALIST PRIOR TO ROUGH-IN.

LAB EQUIPMENT AND UTILITY PLACEMENT TO BE COORDINATED WITH OWNER, CABINET MAKER AND HENRY SCHEIN EQUIPMENT SPECIALIST.

PROPOSED 2ND FLOOR PLUMBING PLAN

1/4"=1'-0"

HENRY SCHEIN®
INTEGRATED DESIGN STUDIO
10920 W LINCOLN AVE. WEST ALLIS, WI 53227
henryscheinintegratedesign.com

PROJECT: **DR. ALAN ARRINGTON**

LOCATION: 222 CHAMBLESS LN. HAMILTON, GA. 31811

HENRY SCHEIN REP: GEORGE HUMMERT

REGION: GA - GEORGIA

PHONE #: (678)-644-7519

-IMPORTANT NOTE-
THIS DOCUMENT HAS BEEN PREPARED AS AN INSTRUMENT OF PROFESSIONAL SERVICE AND **IS NOT AN ARCHITECTURAL PLAN.** THE IDEAS/ DESIGN INCLUDED HEREIN ARE THE SOLE PROPERTY OF HENRY SCHEIN, INC. AND ARE PROTECTED UNDER COPYRIGHT. THESE PLANS MAY NOT BE USED OR REPRODUCED WITHOUT EXPRESSED WRITTEN CONSENT OF HENRY SCHEIN, INC. AND FULL PATMENT OF ANY ASSOCATED DESIGN FEES. **ALL DIMENSIONS ARE SUBJECT TO JOB-SITE VERIFICATION.**

PROJECT NUMBER: 23-0142

PROJECT START DATE: 1/20/2023

FINALS START DATE: 1/20/2023

DRAWN BY: ARCH
FINALS BY: TJK
CHECKED BY: ANT

REVISIONS:

1/30/23	TJK
2/7/23	TJK
2/14/23	TJK
2/27/23	TJK
3/3/23	TJK
3/14/23	TJK
5/25/23	ARCH
--/--/--	---
--/--/--	---

INT.SQ.FT.= PER ARCH

SCALE: 1/4"=1'-0"
SHT. SIZE: 24 x 36

DENTAL PLUMBING PLAN

SP.2

© 2023 by HENRY SCHEIN, INC.

C:\Users\tom.kroy\OneDrive - Henry Schein, Inc\Shared Documents - Sarvet_ALL REGIONS\GA Georgia\ARRINGTON_2023 Sarvet\ARRINGTON-1\ARCH-F5

IMPORTANT NOTE REGARDING DENTAL GAS SYSTEMS

THIS SET OF DRAWINGS INCLUDES SPECIFICATIONS RELATING TO NITROUS OXIDE AND OXYGEN SYSTEMS DESIGNED FOR FACILITIES WHERE MINIMAL TO MODERATE SEDATION (AS DEFINED BY NFPA 99) MAY BE PERFORMED. IF THE OFFICE WILL BE PERFORMING DEEP SEDATION OR GENERAL ANESTHESIA, THE OFFICE AND SYSTEM COMPONENTS MUST COMPLY WITH THE LOCALLY ACCEPTED NFPA 99 CODES RELATING TO THAT CATEGORY OF FACILITY. CONSULT YOUR LOCAL N2O/O2 SYSTEM MANUFACTURER REP FOR MORE INFORMATION.

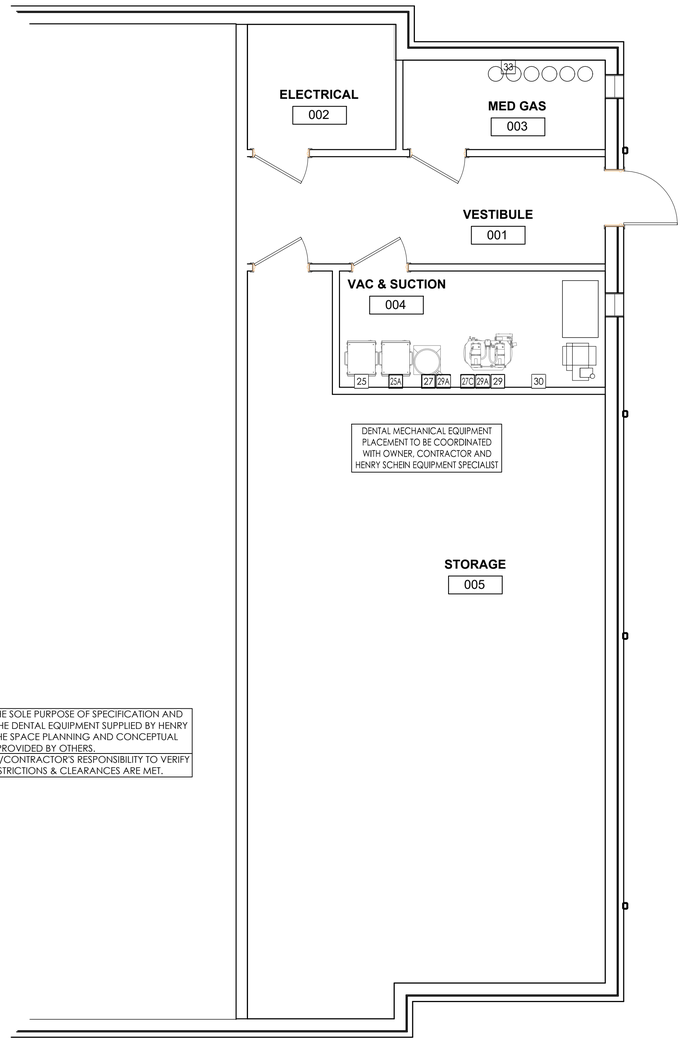

THIS PLAN IS FOR THE SOLE PURPOSE OF SPECIFICATION AND INSTALLATION OF THE DENTAL EQUIPMENT SUPPLIED BY HENRY SCHEIN DENTAL. THE SPACE PLANNING AND CONCEPTUAL DESIGN HAS BEEN PROVIDED BY OTHERS.
IT IS THE ARCHITECT/CONTRACTOR'S RESPONSIBILITY TO VERIFY THAT ALL CODE RESTRICTIONS & CLEARANCES ARE MET.

PROPOSED BASEMENT PLUMBING PLAN

1/4"=1'-0"

PLUMBING NOTES

1. THIS SPECIFICATION SHEET IS INTENDED AS A GUIDE FOR TRADESMEN. THE FLOOR PLANS ENCLOSED HEREIN ARE SUGGESTIONS FOR THE PLACEMENT OF DENTAL EQUIPMENT. THEY ARE NOT INTENDED FOR CONSTRUCTION.

2. EXACT EQUIPMENT LOCATIONS MUST BE JOB SITE VERIFIED BY THE HENRY SCHEIN DENTAL EQUIPMENT SPECIALIST.

3. FOLLOW MANUFACTURER'S TEMPLATES FOR EXACT REQUIREMENTS FOR ANY EQUIPMENT SUPPLIED BY HENRY SCHEIN DENTAL. CONSULT WITH HENRY SCHEIN DENTAL REP FOR ADDITIONAL INFORMATION.

4. DENTAL AIR IS SUPPLIED THROUGH USE OF A DENTAL AIR COMPRESSOR/SUPPLY SYSTEM AND IS PERMITTED TO BE USED AS A SUPPORT GAS FOR DRIVING DENTAL TOOLS AND SUPPLYING AIR-DRIVEN EQUIPMENT AS DESCRIBED WITHIN NFPA 99. DENTAL AIR IS NOT A MEDICAL GAS.

5. WATER PRESSURE MUST NOT EXCEED 50 PS1 AT ALL DENTAL UNITS.

6. ALL PLUMBING MUST CONFORM TO LOCAL PREVAILING CODES.

7. REFER TO ARCHITECT'S DRAWINGS FOR PLUMBING REQUIREMENTS IN ALL AREAS NOT INDICATED ON THIS PLAN.

ALL DIMENSIONS NOTED ON PLAN ARE TO THE CENTERLINE OF PLUMBING OR UTILITY CENTER (UNLESS SHOWN OTHERWISE)

SEE SHEETS SED.1 - SED.4 FOR DENTAL EQUIPMENT DETAILS

VACUUM NOTES

THE VACUUM PIPING LAYOUT HAS A LARGE EFFECT ON THE EFFICIENCY AND RELIABILITY OF THE DENTAL VACUUM SYSTEM. REFER TO MANUFACTURER'S PRE-INSTALLATION GUIDE PROVIDED BY HENRY SCHEIN EQUIPMENT SPECIALIST FOR SPECIFIC SIZING OF STUB-UP, TRUNK, AND BRANCH LINES.

IT IS HIGHLY RECOMMENDED THAT VACUUM LINES RUN UNDERNEATH DENTAL EQUIPMENT BY MEANS OF TRENCHING/ CORING (CONCRETE SLAB) OR IN SUB FLOOR (BASEMENT/ CRAWL SPACE). ALL LINES ARE TO BE DESIGNED WITH PVC PIPING UNLESS DICTATED BY LOCAL CODES TO USE COPPER OR CAST IRON.

TO ENSURE OPTIMUM VACUUM PERFORMANCE, INSTALL MAIN LINE DIRECTLY BELOW THE DENTAL CHAIR, CABINET OR WALL JUNCTION BOX TO REDUCE OR ELIMINATE BRANCH LINE RUNS WHEREVER POSSIBLE.

1. TERMINATION
TERMINATE VACUUM TRUNK LINE IN MECHANICAL ROOM. PLUMBING CONTRACTOR TO PROVIDE FPT ADAPTOR ON END OF STUB-UP FROM FLOOR OR WALL. SIZE OF ADAPTOR TO BE DETERMINED BY TRUNK AND PUMP INTAKE PIPE SIZES. SEE DETAILS THIS SET & MANUFACTURER TEMPLATES PROVIDED BY HENRY SCHEIN EQUIPMENT REP. IN THE CASE OF DUAL TRUNK LINE SYSTEM, PROVIDE ENOUGH SPACE BETWEEN STUB-UPS TO INSTALL TEES ON BOTH LINES.

2. TRUNK LINE(S)
VACUUM TRUNK LINES(S) TO BE SUPPORTED EVERY 6'-0" TO PREVENT SAG AND SLOPED A MINIMUM OF 1/4" PER 10'-0" TOWARD THE VACUUM PUMP.

3. BRANCH LINE(S)
BRANCH LINES ARE TO HAVE "SWEEPING" 90 DEGREE TURNS TO AVOID VACUUM LOSS. A "WYE" FITTING SHOULD BE USED TO JOIN BRANCH LINES TO THE TRUNK LINE.

BRANCH LINE CONFIGURATION

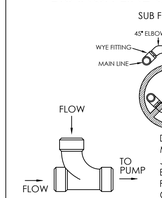

DETAIL A
WYE FITTING (USE FOR ALL SUB FLOOR INTERSECTIONS)

DO NOT PIPE TRUNK LINE IN A SERIES MANNER LOOPING FROM J-BOX TO J-BOX. A CONTINUOUS TRUNK LINE MUST BE MAINTAINED FROM THE PUMP TO THE FURTHEST J-BOX USING BRANCH LINES OFF OF THE TRUNK LINE TO PICK UP EACH VACUUM OUTLET. TRUNK LINE MAY FOLLOW DRAIN LINE TRENCHES WITHIN REASON. USE ONLY 45 DEGREE EL'S. DO NOT USE ANY 90 DEGREE EL'S. ALL SUB FLOOR SCH 40 PVC CONNECTIONS ARE TO BE PLUMBED WITH 45 DEGREE EL'S USING DETAIL A FOR TEEING BRANCH LINE CONNECTIONS INTO TRUNK LINE.

SPECIAL NOTE:
IF VACUUM LINES ENCROACH ON EITHER A WALL OR COLUMN FOOTING, USE 45 DEGREE ELBOWS TO PIPE AROUND FOOTING SO PIPE REACHES PROPER LOCATION.

PLUMBING SPECIFICATIONS

PLEASE NOTE: A LICENSED PLUMBING CONTRACTOR IS RESPONSIBLE FOR PROVIDING ALL REQUIRED UTILITIES. ALL REQUIREMENTS TO BE VERIFIED BY MANUFACTURER'S SPEC SHEETS PROVIDED BY HENRY SCHEIN DENTAL EQUIPMENT SPECIALIST. MANUFACTURER'S SPECS SUPERSEDE ANY AND ALL INFORMATION CONTAINED HEREIN.

QUANTITY	SPEC. NUMBER	DESCRIPTION	UTILITIES: COLD WATER	HOT WATER	DRAIN	COMPRESSED AIR	NATURAL GAS	VACUUM	N2O	OXYGEN	NITROGEN	VENT	DETAIL
1	25	DENTAL AIR COMPRESSOR - SUPPLIED BY HENRY SCHEIN DENTAL, INSTALLED BY CONTRACTOR(S). FOR DENTAL AIR DRIVEN DEVICES. PLUMBER TO PROVIDE 1/2" I.D. COPPER TYPE K OR L SUPPLY LINES TO LOCATIONS THAT REQUIRE AIR. BUCK BOOST TRANSFORMER SUPPLIED AND INSTALLED BY ELECTRICIAN (IF REQ'D). FINAL CONNECTIONS BY CONTRACTOR(S).				•							25
1	25	DENTAL AIR COMPRESSOR - SUPPLIED BY HENRY SCHEIN DENTAL, INSTALLED BY CONTRACTOR(S). FOR DENTAL AIR DRIVEN DEVICES. PLUMBER TO PROVIDE 1/2" I.D. COPPER TYPE K OR L SUPPLY LINES TO LOCATIONS THAT REQUIRE AIR. BUCK BOOST TRANSFORMER SUPPLIED AND INSTALLED BY ELECTRICIAN (IF REQ'D). FINAL CONNECTIONS BY CONTRACTOR(S).				•							25
1	27	VACUUM PUMP (DRY) - SUPPLIED BY HENRY SCHEIN DENTAL, INSTALLED BY CONTRACTOR(S). VERIFY TRUNK & BRANCH LINE SIZES WITH MFR RECOMMENDATIONS. USE SCH 40 PVC WHERE PERMITTED BY CODE. PLUMBER TO EXHAUST PUMP TO OUTSIDE. BUCK BOOST TRANSFORMER SUPPLIED AND INSTALLED BY ELECTRICIAN (IF REQ'D). DRAIN BY PLUMBER. FINAL CONNECTIONS BY CONTRACTOR(S). PLUMBER TO PROVIDE WATER LINE WITH HOSE BIB NEAR UNIT. SEE DETAIL.	•		•			•				•	27
1	27C	SURGICAL VACUUM PUMP - SUPPLIED BY HENRY SCHEIN DENTAL, INSTALLED BY CONTRACTOR(S). RUN TYPE K OR L COPPER LINES TO TREATMENT ROOM VACUUM OUTLET STATION(S) (28A). ALL LINE SIZED PER MFGR SPECS. EXHAUST PUMP TO OUTSIDE (OPTIONAL). BUCK BOOST TRANSFORMER SUPPLIED AND INSTALLED BY ELECTRICIAN IF REQUIRED. FINAL CONNECTIONS BY CONTRACTOR(S).			•			•				•	27C
1	29	AIR/WATER SEPARATOR - SUPPLIED BY HENRY SCHEIN DENTAL, INSTALLED BY PLUMBER. VENT TO OUTSIDE.			•							•	
2	29A	AMALGAM SEPARATOR - SUPPLIED BY HENRY SCHEIN DENTAL, INSTALLED BY PLUMBER. VERIFY LOCATION WITH HENRY SCHEIN DENTAL EQUIPMENT SPECIALIST. CONNECT TO VACUUM LINE COMING IN FROM TREATMENT ROOMS.											29A
1	30	REMOTE WATER CONTROL VALVE - SUPPLIED BY HENRY SCHEIN DENTAL, INSTALLED BY PLUMBER ON COLD WATER SUPPLY LINE.	•										30
1	33	NITROUS OXIDE & OXYGEN MANIFOLD/SYSTEM – MANIFOLD SUPPLIED BY HENRY SCHEIN DENTAL, INSTALLED BY ASSE 6010 CERTIFIED PLUMBER. SILVER SOLDERED TYPE K OR L COPPER GAS LINES TO ALL (7) AND/OR (7C) LOCATIONS ON SHEET SP.1. BY ASSE 6010 CERTIFIED PLUMBER. WHERE EMERGENCY SHUT-OFF VALVE IS REQUIRED BY CODE (34A). GAS LINES MUST RUN THERE FIRST. ALL ASPECTS OF SYSTEM & CYLINDER CLOSET MUST FOLLOW CODES FOR LOCATIONS PERFORMING MINIMAL TO MODERATE SEDATION AS DEFINED BY NFPA 99.							•	•		•	33

HENRY SCHEIN®
INTEGRATED DESIGN STUDIO
10920 W LINCOLN AVE. WEST ALLIS, WI 53227
henryscheinintegratedesign.com

PROJECT: **DR. ALAN ARRINGTON**

LOCATION: 222 CHAMBLESS LN. HAMILTON, GA. 31811

HENRY SCHEIN REP: GEORGE HUMMERT

REGION: GA - GEORGIA

PHONE #: (678)-644-7519

-IMPORTANT NOTE-
THIS DOCUMENT HAS BEEN PREPARED AS AN INSTRUMENT OF PROFESSIONAL SERVICE AND **IS NOT AN ARCHITECTURAL PLAN.** THE IDEAS/ DESIGN INCLUDED HEREIN ARE THE SOLE PROPERTY OF HENRY SCHEIN, INC. AND ARE PROTECTED UNDER COPYRIGHT. THESE PLANS MAY NOT BE USED OR REPRODUCED WITHOUT EXPRESSED WRITTEN CONSENT OF HENRY SCHEIN, INC. AND FULL PAYMENT OF ANY ASSOCIATED DESIGN FEES. **ALL DIMENSIONS ARE SUBJECT TO JOB-SITE VERIFICATION.**

PROJECT NUMBER: 23-0142

PROJECT START DATE: 1/20/2023

FINALS START DATE: 1/20/2023

DRAWN BY: ARCH
FINALS BY: TJK
CHECKED BY: ANT

REVISIONS:

1/30/23	TJK
2/7/23	TJK
2/14/23	TJK
2/27/23	TJK
3/3/23	TJK
3/14/23	TJK
5/25/23	ARCH
--/--/--	---
--/--/--	---

INT.SQ.FT.= PER ARCH

SCALE: 1/4"=1'-0" | SHT. SIZE: 24 x 36

DENTAL PLUMBING PLAN

SP.3

© 2023 by HENRY SCHEIN, INC.

C:\Users\tom.king\OneDrive - Henry Schein, Inc\Shared Documents - Server_ALL REGIONS\GA Georgia\ARRINGTON, 2023 Space\ARRINGTON, 1\ARCH.F5

ELECTRICAL NOTES

1. THIS SPECIFICATION SHEET IS INTENDED AS A GUIDE FOR TRADESMEN. THE FLOOR PLANS ENCLOSED HEREIN ARE SUGGESTIONS FOR THE PLACEMENT OF DENTAL EQUIPMENT. THEY ARE NOT INTENDED FOR CONSTRUCTION.

2. EXACT EQUIPMENT LOCATIONS MUST BE JOB SITE VERIFIED BY THE HENRY SCHEIN DENTAL EQUIPMENT SPECIALIST.

3. FOLLOW MANUFACTURER'S TEMPLATES FOR EXACT REQUIREMENTS FOR ANY EQUIPMENT SUPPLIED BY HENRY SCHEIN DENTAL. CONSULT WITH HENRY SCHEIN DENTAL REP FOR ADDITIONAL INFORMATION.

4. GFCI PROTECTION OR REDUNDANT GROUND IN DENTAL CHAIR RECEPTACLES, DENTAL UTILITY CABINETS AND ANY OTHER AREAS REQUIRED BY LOCAL CODE IS THE RESPONSIBILITY OF THE ELECTRICAL CONTRACTOR.

5. ADDITIONAL CONVENIENCE OUTLETS REQUIRED ON JOBSITE ARE THE RESPONSIBILITY OF ELECTRICAL CONTRACTORS. FOLLOW LOCAL CODE RESTRICTIONS.

6. ALL CONDUIT LOCATIONS SHOULD BE VERIFIED WITH OWNER AND HENRY SCHEIN REP PRIOR TO ROUGH-IN.

7. ALL COMPUTER NETWORKING AND WORKSTATIONS MUST BE SPECIFIED BY CUSTOMER'S COMPUTER SUPPLIER. IF HENRY SCHEIN WILL BE SUPPLYING THE COMPUTERS & NETWORKING COMPONENTS, SEE SHEET SE.2 FOR THE OFFICE TECHNOLOGY PLAN.

8. CONTRACTOR TO PROVIDE AND INSTALL ALL EXIT SIGNS, EMERGENCY LIGHTING AND FIRE SUPPRESSION & DETECTION SYSTEMS AS PER ARCHITECT'S DRAWINGS AND LOCAL CODE.

9. REFER TO ARCHITECT'S DRAWINGS FOR ELECTRICAL REQUIREMENTS IN ALL AREAS NOT INDICATED ON THIS PLAN.

ALL DIMENSIONS NOTED ON PLAN ARE TO THE CENTERLINE OF RECEPTACLE OR UTILITY CENTER (UNLESS SHOWN OTHERWISE)

*SPECIFICATIONS MAY INCLUDE DATA, SEE ELECTRICAL SCHEDULE THIS SHEET

SEE SHEETS SED.1 - SED.4 FOR DENTAL EQUIPMENT DETAILS

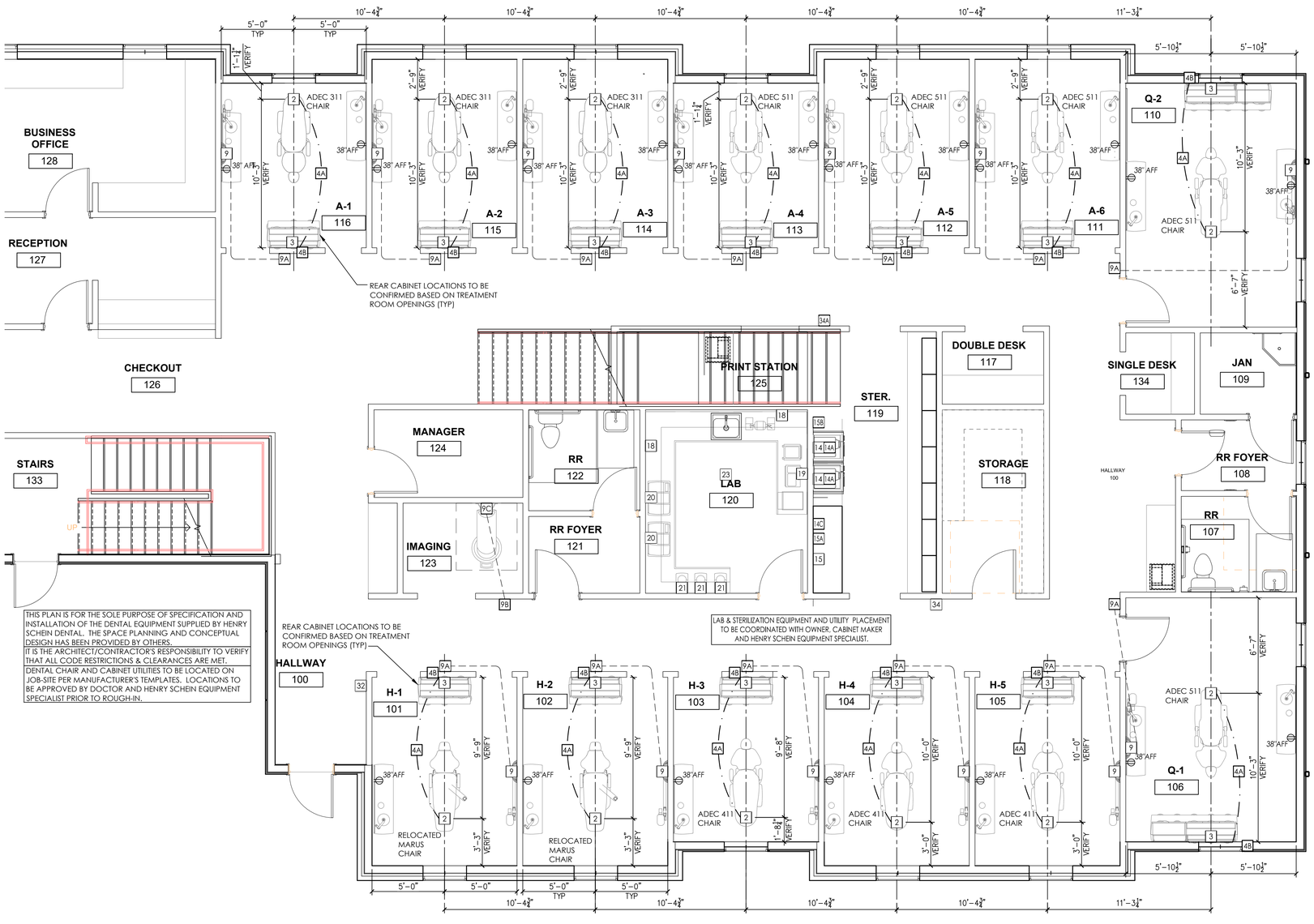

THIS PLAN IS FOR THE SOLE PURPOSE OF SPECIFICATION AND INSTALLATION OF THE DENTAL EQUIPMENT SUPPLIED BY HENRY SCHEIN DENTAL. THE SPACE PLANNING AND CONCEPTUAL DESIGN HAS BEEN PROVIDED BY OTHERS.

IT IS THE ARCHITECT/CONTRACTOR'S RESPONSIBILITY TO VERIFY THAT ALL CODE RESTRICTIONS & CLEARANCES ARE MET.

DENTAL CHAIR AND CABINET UTILITIES TO BE LOCATED ON JOB-SITE PER MANUFACTURER'S TEMPLATES. LOCATIONS TO BE APPROVED BY DOCTOR AND HENRY SCHEIN EQUIPMENT SPECIALIST PRIOR TO ROUGH-IN.

PROPOSED 1ST FLOOR ELECTRICAL PLAN

1/4"=1'-0"

ELECTRICAL SPECIFICATIONS

PLEASE NOTE: A LICENSED ELECTRICAL CONTRACTOR IS RESPONSIBLE FOR PROVIDING ALL REQUIRED UTILITIES. ALL REQUIREMENTS TO BE VERIFIED BY MANUFACTURER'S SPEC SHEETS PROVIDED BY HENRY SCHEIN DENTAL EQUIPMENT SPECIALIST. MANUFACTURER'S SPECS SUPERSEDE ANY AND ALL INFORMATION CONTAINED HEREIN.

QUANTITY	SPEC. NUMBER	DESCRIPTION	UTILITIES: POWER	UTILITIES: DEDICATED CIRCUIT	UTILITIES: LOW VOLTAGE CONTROL	UTILITIES: DATA DROP	DETAIL
5	2	ADEC 511 CHAIR UTILITY CENTER – SEE DETAIL(S). ALL UTILITIES MUST CONFORM TO PREVAILING LOCAL CODES.	115V				2
2	2	MARUS CHAIR UTILITY CENTER – SEE DETAIL(S). ALL UTILITIES MUST CONFORM TO PREVAILING LOCAL CODES.	115V				2
3	2	ADEC 411 CHAIR UTILITY CENTER – SEE DETAIL(S). ALL UTILITIES MUST CONFORM TO PREVAILING LOCAL CODES.	115V				2
3	2	ADEC 311 CHAIR UTILITY CENTER – SEE DETAIL(S). ALL UTILITIES MUST CONFORM TO PREVAILING LOCAL CODES.	115V				2
13	3	CABINET UTILITY CENTER – SEE DETAIL(S). ALL UTILITIES MUST CONFORM TO PREVAILING LOCAL CODES.	115V				3
13	4A	2" SUB-FLOOR CONDUIT - SUB-FLOOR PIPE CHASE WITH PULL-STRING SUPPLIED & INSTALLED BY ELECTRICIAN. SWEEPING 90 DEGREE BENDS ONLY. STUB-UP FLUSH WITH SUB-FLOOR AT EACH END, MARK LOCATION AT FINISH.					4A
13	4B	2" VERTICAL CONDUIT - VERTICAL PIPE CHASE WITH PULL-STRING SUPPLIED AND INSTALLED BY ELECTRICIAN. RUN FROM ABOVE CEILING DOWN TO SINGLE-GANG MUD RING OR BOX AT SILL PLATE.					4B
13	9	WALL MOUNTED INTRAORAL X-RAY HEAD, ARM, AND WALL BRACKET - SUPPLIED AND INSTALLED BY HENRY SCHEIN DENTAL. BLOCKING & ELECTRICAL BY CONTRACTOR(S).	115V	20A	•		9
13	9A	X-RAY MASTER CONTROL – SUPPLIED AND INSTALLED BY HENRY SCHEIN DENTAL. ELECTRICIAN TO SUPPLY AND INSTALL PIPE CHASE WITH PULL-STRING TO (9) LOCATION WHEN (9A) IS REMOTE. VERIFY SUPPLIER OF WIRING WITH HENRY SCHEIN DENTAL EQUIPMENT SPECIALIST.			•		9A
1	9B	X-RAY REMOTE EXPOSURE BUTTON – SUPPLIED AND INSTALLED BY HENRY SCHEIN DENTAL. ELECTRICIAN TO SUPPLY AND INSTALL PIPE CHASE WITH PULL-STRING TO (9A) OR (9C) LOCATION. VERIFY SUPPLIER OF EXPOSURE BUTTON AND WIRING WITH HENRY SCHEIN DENTAL EQUIPMENT SPECIALIST.			•		9B
1	9C	PANORAMIC IMAGING UNIT (2D OR 3D) - SUPPLIED AND INSTALLED BY HENRY SCHEIN DENTAL. BLOCKING & ELECTRICAL BY CONTRACTOR(S). CONFIRM POWER REQUIREMENTS WITH HENRY SCHEIN DENTAL EQUIPMENT SPECIALIST.	115V & 230V	20A (X2)		•	9C
2	14	STERILIZER (SINGLE CASSETTE) - FOR EQUIPMENT LOCATION ONLY. CONTRACTOR TO PROVIDE REQ'D UTILITIES FOR STERILIZATION CENTER AT 14C LOCATION. STERILIZER SUPPLIED AND INSTALLED BY HENRY SCHEIN DENTAL.	115V	20A			14C
2	14A	STERILIZER (AUTOCLAVE) - FOR EQUIPMENT LOCATION ONLY. CONTRACTOR TO PROVIDE REQ'D UTILITIES FOR STERILIZATION CENTER AT 14C LOCATION. STERILIZER SUPPLIED AND INSTALLED BY HENRY SCHEIN DENTAL.	115V	20A			14C
1	14C	MODULAR STERILZATION CENTER - STERI-CENTER SUPPLIED AND INSTALLED BY HENRY SCHEIN DENTAL. CONTRACTOR TO PROVIDE UTILITIES PER MANUFACTURER'S SPECIFICATIONS. EXACT LOCATIONS TO BE CONFIRMED ON-SITE BY HENRY SCHEIN DENTAL EQUIPMENT SPECIALIST. FINAL CONNECTIONS BY CONTRACTOR(S).	SEE MFR. SPECS	•			14C
1	15	ULTRASONIC CLEANER - FOR EQUIPMENT LOCATION ONLY. CONTRACTOR TO PROVIDE REQ'D UTILITIES FOR STERILIZATION CENTER AT 14C LOCATION. CLEANER SUPPLIED AND INSTALLED BY HENRY SCHEIN DENTAL. CONNECTS TO SINK DRAIN.	115V				14C
1	15A	WASHER DISINFECTOR - FOR EQUIPMENT LOCATION ONLY. CONTRACTOR TO PROVIDE REQ'D UTILITIES FOR STERILIZATION CENTER AT 14C LOCATION . WASHER SUPPLIED AND INSTALLED BY HENRY SCHEIN DENTAL.	230V	15A			15A
1	15B	HANDPIECE MAINTENANCE SYSTEM - FOR EQUIPMENT LOCATION ONLY. CONTRACTOR TO PROVIDE REQ'D UTILITIES FOR STERILIZATION CENTER AT 14C LOCATION. SYSTEM SUPPLIED AND INSTALLED BY HENRY SCHEIN DENTAL.	115V				14C
2	18	LAB DUST COLLECTOR - SUPPLIED AND INSTALLED BY HENRY SCHEIN DENTAL. ELECTRICIAN TO PROVIDE OUTLET AT 18" A.F.F. (UNLESS NOTED OTHERWISE).	115V				
1	19	3D PRINTING SYSTEM – PRINTER, WASH/DRY AND CURING UNITS SUPPLIED AND INSTALLED BY HENRY SCHEIN DENTAL. 5'-0" OF CLEAR COUNTER SPACE RECOMMENDED. 2'-4" CLEARANCE REQUIRED BETWEEN COUNTERTOP AND UPPER CABINETS. POWER BY ELECTRICIAN. SEE DETAIL.	115V			•	19
2	20	CAD/CAM MILL – SUPPLIED AND INSTALLED BY HENRY SCHEIN DENTAL. 2'-6" CLEARANCE REQUIRED BETWEEN COUNTERTOP AND UPPER CABINETS. UTILITIES BY CONTRACTOR(S). SEE DETAIL.	115V				20
3	21	SINTERING FURNACE - SUPPLIED AND INSTALLED BY HENRY SCHEIN DENTAL. POWER BY ELECTRICIAN.	115V	20A		•	21
1	23	EXHAUST FAN - SUPPLIED AND INSTALLED BY CONTRACTOR. MAY REQUIRE A SWITCH DEPENDING ON APPLICATION. VENT TO OUTSIDE.	115V	•			
1	32	MECHANICAL ROOM CONTROL PANEL - SUPPLIED BY HENRY SCHEIN DENTAL, INSTALLED BY ELECTRICIAN 60" A.F.F. ELECTRICIAN TO SUPPLY AND INSTALL 24V CONTROL WIRING FROM PANEL TO EACH COMPRESSOR, VACUUM AND/OR SOLENOID PER MFR SPECS.			•		32
1	34	NITROUS OXIDE & OXYGEN SYSTEM ALARM – ALARM SUPPLIED & INSTALLED BY HENRY SCHEIN DENTAL. ELECTRICIAN TO RUN L/V CABLING BETWEEN ALARM AND MANIFOLD (33). CABLING MAY BE PROVIDED BY MANUFACTURER, SEE HENRY SCHEIN REP.	24V		•		34
1	34A	NITROUS OXIDE & OXYGEN EMERGENCY SHUT-OFF VALVE - SUPPLIED BY HENRY SCHEIN DENTAL, INSTALLED BY ASSE 6010 CERTIFIED PLUMBER ON BRANCH LINES BETWEEN MANIFOLD & TREATMENT ROOMS. SILVER SOLDERED TYPE K OR L COPPER LINES ONLY. FOLLOW NFPA 99 CODES.	24V		•		34A

ELECTRICAL LEGEND

ALL HEIGHTS TO BE SPECIFIED ON-SITE UNLESS NOTED OTHERWISE

⊖ DUPLEX RECEPTACLE

HENRY SCHEIN®
INTEGRATED DESIGN STUDIO
10920 W LINCOLN AVE, WEST ALLIS, WI 53227
henryscheinintegratedesign.com

PROJECT: **DR. ALAN ARRINGTON**

LOCATION: 222 CHAMBLESS LN, HAMILTON, GA. 31811

HENRY SCHEIN REP: GEORGE HUMMERT

REGION: GA - GEORGIA

PHONE #: (678)-644-7519

-IMPORTANT NOTE-
THIS DOCUMENT HAS BEEN PREPARED AS AN INSTRUMENT OF PROFESSIONAL SERVICE AND **IS NOT AN ARCHITECTURAL PLAN.** THE IDEAS/ DESIGN INCLUDED HEREIN ARE THE SOLE PROPERTY OF HENRY SCHEIN, INC. AND ARE PROTECTED UNDER COPYRIGHT. THESE PLANS MAY NOT BE USED OR REPRODUCED WITHOUT EXPRESSED WRITTEN CONSENT OF HENRY SCHEIN, INC. AND FULL PAYMENT OF ANY ASSOCIATED DESIGN FEES. **ALL DIMENSIONS ARE SUBJECT TO JOB-SITE VERIFICATION.**

PROJECT NUMBER: 23-0142

PROJECT START DATE: 1/20/2023

FINALS START DATE: 1/20/2023

DRAWN BY: ARCH
FINALS BY: TJK
CHECKED BY: ANT

REVISIONS:

1/30/23	TJK
2/7/23	TJK
2/14/23	TJK
2/27/23	TJK
3/3/23	TJK
3/14/23	TJK
5/25/23	ARCH
--/--/--	---
--/--/--	---

INT.SQ.FT.= PER ARCH

SCALE: 1/4"=1'-0" | SHT. SIZE: 24 x 36

DENTAL ELECTRICAL PLAN

SE.1

© 2023 by HENRY SCHEIN, INC.

C:\Users\tom.king\OneDrive - Henry Schein, Inc\Shared Documents - Servert, ALL REGIONS\GA Georgia\ARRINGTON, 2023 Space\ARRINGTON-1\ARCH.F5

ELECTRICAL SPECIFICATIONS

PLEASE NOTE: A LICENSED ELECTRICAL CONTRACTOR IS RESPONSIBLE FOR PROVIDING ALL REQUIRED UTILITIES. ALL REQUIREMENTS TO BE VERIFIED BY MANUFACTURER'S SPEC SHEETS PROVIDED BY HENRY SCHEIN DENTAL EQUIPMENT SPECIALIST. MANUFACTURER'S SPECS SUPERSEDE ANY AND ALL INFORMATION CONTAINED HEREIN.

QUANTITY	SPEC. NUMBER	DESCRIPTION	UTILITIES: POWER	DEDICATED CIRCUIT	LOW VOLTAGE CONTROL	DATA DROP	DETAIL
1	16	MODEL TRIMMER - SUPPLIED AND INSTALLED BY HENRY SCHEIN DENTAL. DO NOT TIE INTO COLD WATER LINE FOR SINK. SEE DETAIL.	115V				16
1	18	LAB DUST COLLECTOR - SUPPLIED AND INSTALLED BY HENRY SCHEIN DENTAL. ELECTRICIAN TO PROVIDE OUTLET AT 18" A.F.F. (UNLESS NOTED OTHERWISE).	115V				
1	19	3D PRINTING SYSTEM – PRINTER, WASH/DRY AND CURING UNITS SUPPLIED AND INSTALLED BY HENRY SCHEIN DENTAL. 5'-0" OF CLEAR COUNTER SPACE RECOMMENDED. 2'-4" CLEARANCE REQUIRED BETWEEN COUNTERTOP AND UPPER CABINETS. POWER BY ELECTRICIAN. SEE DETAIL.	115V			•	19
2	20A	CAD/CAM MILL – SUPPLIED AND INSTALLED BY HENRY SCHEIN DENTAL. 2'-6" CLEARANCE REQUIRED BETWEEN COUNTERTOP AND UPPER CABINETS. UTILITIES BY CONTRACTOR(S). SEE DETAIL.	115V & 220V	•			20A
3	21	SINTERING FURNACE - SUPPLIED AND INSTALLED BY HENRY SCHEIN DENTAL. POWER BY ELECTRICIAN.	115V	20A		•	21
1	23	EXHAUST FAN - SUPPLIED AND INSTALLED BY CONTRACTOR. MAY REQUIRE A SWITCH DEPENDING ON APPLICATION. VENT TO OUTSIDE.	115V	•			

ELECTRICAL NOTES

1. THIS SPECIFICATION SHEET IS INTENDED AS A GUIDE FOR TRADESMEN. THE FLOOR PLANS ENCLOSED HEREIN ARE SUGGESTIONS FOR THE PLACEMENT OF DENTAL EQUIPMENT. THEY ARE NOT INTENDED FOR CONSTRUCTION.

2. EXACT EQUIPMENT LOCATIONS MUST BE JOB SITE VERIFIED BY THE HENRY SCHEIN DENTAL EQUIPMENT SPECIALIST.

3. FOLLOW MANUFACTURER'S TEMPLATES FOR EXACT REQUIREMENTS FOR ANY EQUIPMENT SUPPLIED BY HENRY SCHEIN DENTAL. CONSULT WITH HENRY SCHEIN DENTAL REP FOR ADDITIONAL INFORMATION.

4. GFCI PROTECTION OR REDUNDANT GROUND IN DENTAL CHAIR RECEPTACLES, DENTAL UTILITY CABINETS AND ANY OTHER AREAS REQUIRED BY LOCAL CODE IS THE RESPONSIBILITY OF THE ELECTRICAL CONTRACTOR.

5. ADDITIONAL CONVENIENCE OUTLETS REQUIRED ON JOBSITE ARE THE RESPONSIBILITY OF ELECTRICAL CONTRACTORS. FOLLOW LOCAL CODE RESTRICTIONS.

6. ALL CONDUIT LOCATIONS SHOULD BE VERIFIED WITH OWNER AND HENRY SCHEIN REP PRIOR TO ROUGH-IN.

7. ALL COMPUTER NETWORKING AND WORKSTATIONS MUST BE SPECIFIED BY CUSTOMER'S COMPUTER SUPPLIER. IF HENRY SCHEIN WILL BE SUPPLYING THE COMPUTERS & NETWORKING COMPONENTS, SEE SHEET SE.2 FOR THE OFFICE TECHNOLOGY PLAN.

8. CONTRACTOR TO PROVIDE AND INSTALL ALL EXIT SIGNS, EMERGENCY LIGHTING AND FIRE SUPPRESSION & DETECTION SYSTEMS AS PER ARCHITECT'S DRAWINGS AND LOCAL CODE.

9. REFER TO ARCHITECT'S DRAWINGS FOR ELECTRICAL REQUIREMENTS IN ALL AREAS NOT INDICATED ON THIS PLAN.

ALL DIMENSIONS NOTED ON PLAN ARE TO THE CENTERLINE OF RECEPTACLE OR UTILITY CENTER (UNLESS SHOWN OTHERWISE)

*SPECIFICATIONS MAY INCLUDE DATA, SEE ELECTRICAL SCHEDULE THIS SHEET

SEE SHEETS SED.1 - SED.4 FOR DENTAL EQUIPMENT DETAILS

ELECTRICAL LEGEND

ALL HEIGHTS TO BE SPECIFIED ON-SITE UNLESS NOTED OTHERWISE

⊖ DUPLEX RECEPTACLE

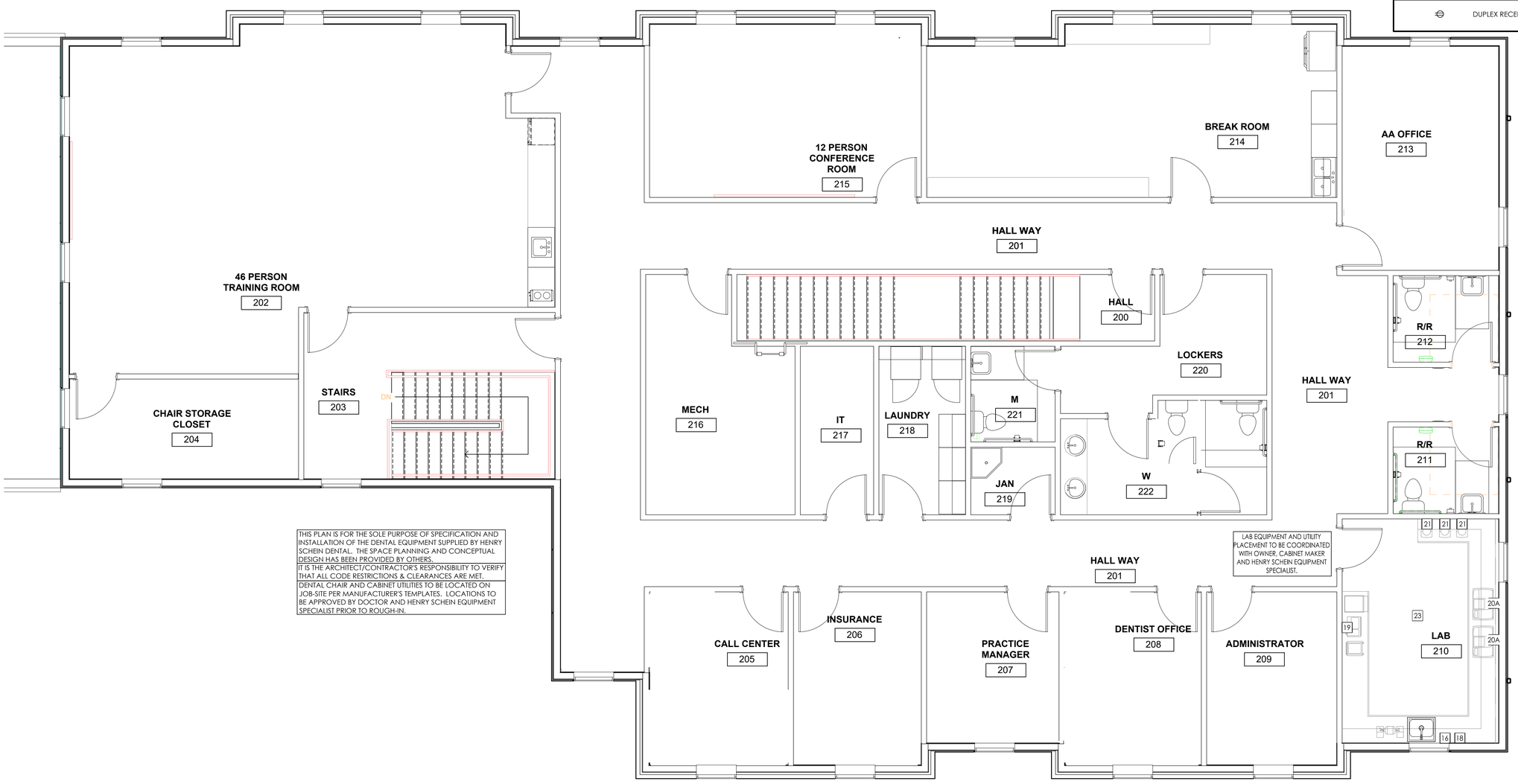

THIS PLAN IS FOR THE SOLE PURPOSE OF SPECIFICATION AND INSTALLATION OF THE DENTAL EQUIPMENT SUPPLIED BY HENRY SCHEIN DENTAL. THE SPACE PLANNING AND CONCEPTUAL DESIGN HAS BEEN PROVIDED BY OTHERS.
IT IS THE ARCHITECT/CONTRACTOR'S RESPONSIBILITY TO VERIFY THAT ALL CODE RESTRICTIONS & CLEARANCES ARE MET.
DENTAL CHAIR AND CABINET UTILITIES TO BE LOCATED ON JOB-SITE PER MANUFACTURER'S TEMPLATES. LOCATIONS TO BE APPROVED BY DOCTOR AND HENRY SCHEIN EQUIPMENT SPECIALIST PRIOR TO ROUGH-IN.

LAB EQUIPMENT AND UTILITY PLACEMENT TO BE COORDINATED WITH OWNER, CABINET MAKER AND HENRY SCHEIN EQUIPMENT SPECIALIST.

PROPOSED 2ND FLOOR ELECTRICAL PLAN

1/4"=1'-0"

HENRY SCHEIN®
INTEGRATED DESIGN STUDIO
10920 W LINCOLN AVE. WEST ALLIS, WI 53227
henryscheinintegratedesign.com

PROJECT: **DR. ALAN ARRINGTON**

LOCATION: 222 CHAMBLESS LN. HAMILTON, GA. 31811

HENRY SCHEIN REP: GEORGE HUMMERT

REGION: GA - GEORGIA

PHONE #: (678)-644-7519

-IMPORTANT NOTE-
THIS DOCUMENT HAS BEEN PREPARED AS AN INSTRUMENT OF PROFESSIONAL SERVICE AND **IS NOT AN ARCHITECTURAL PLAN.** THE IDEAS/ DESIGN INCLUDED HEREIN ARE THE SOLE PROPERTY OF HENRY SCHEIN, INC. AND ARE PROTECTED UNDER COPYRIGHT. THESE PLANS MAY NOT BE USED OR REPRODUCED WITHOUT EXPRESSED WRITTEN CONSENT OF HENRY SCHEIN, INC. AND FULL PAYMENT OF ANY ASSOCIATED DESIGN FEES. **ALL DIMENSIONS ARE SUBJECT TO JOB-SITE VERIFICATION.**

PROJECT NUMBER: 23-0142

PROJECT START DATE: 1/20/2023

FINALS START DATE: 1/20/2023

DRAWN BY: ARCH
FINALS BY: TJK
CHECKED BY: ANT

REVISIONS:

1/30/23	TJK
2/7/23	TJK
2/14/23	TJK
2/27/23	TJK
3/3/23	TJK
3/14/23	TJK
5/25/23	ARCH
--/--/--	---
--/--/--	---

INT.SQ.FT.= PER ARCH

SCALE: 1/4"=1'-0" | SHT. SIZE: 24 x 36

DENTAL ELECTRICAL PLAN

SE.2

© 2023 by HENRY SCHEIN, INC.

C:\Users\tom.king\OneDrive - Henry Schein, Inc\Shared Documents - Server_ALL REGIONS\GA Georgia\ARRINGTON_2023 Space\ARRINGTON_1\ARCH\F5

ELECTRICAL NOTES

1. THIS SPECIFICATION SHEET IS INTENDED AS A GUIDE FOR TRADESMEN. THE FLOOR PLANS ENCLOSED HEREIN ARE SUGGESTIONS FOR THE PLACEMENT OF DENTAL EQUIPMENT. THEY ARE NOT INTENDED FOR CONSTRUCTION.

2. EXACT EQUIPMENT LOCATIONS MUST BE JOB SITE VERIFIED BY THE HENRY SCHEIN DENTAL EQUIPMENT SPECIALIST.

3. FOLLOW MANUFACTURER'S TEMPLATES FOR EXACT REQUIREMENTS FOR ANY EQUIPMENT SUPPLIED BY HENRY SCHEIN DENTAL. CONSULT WITH HENRY SCHEIN DENTAL REP FOR ADDITIONAL INFORMATION.

4. GFCI PROTECTION OR REDUNDANT GROUND IN DENTAL CHAIR RECEPTACLES, DENTAL UTILITY CABINETS AND ANY OTHER AREAS REQUIRED BY LOCAL CODE IS THE RESPONSIBILITY OF THE ELECTRICAL CONTRACTOR.

5. ADDITIONAL CONVENIENCE OUTLETS REQUIRED ON JOBSITE ARE THE RESPONSIBILITY OF ELECTRICAL CONTRACTORS. FOLLOW LOCAL CODE RESTRICTIONS.

6. ALL CONDUIT LOCATIONS SHOULD BE VERIFIED WITH OWNER AND HENRY SCHEIN REP PRIOR TO ROUGH-IN.

7. ALL COMPUTER NETWORKING AND WORKSTATIONS MUST BE SPECIFIED BY CUSTOMER'S COMPUTER SUPPLIER. IF HENRY SCHEIN WILL BE SUPPLYING THE COMPUTERS & NETWORKING COMPONENTS, SEE SHEET SE.2 FOR THE OFFICE TECHNOLOGY PLAN.

8. CONTRACTOR TO PROVIDE AND INSTALL ALL EXIT SIGNS, EMERGENCY LIGHTING AND FIRE SUPPRESSION & DETECTION SYSTEMS AS PER ARCHITECT'S DRAWINGS AND LOCAL CODE.

9. REFER TO ARCHITECT'S DRAWINGS FOR ELECTRICAL REQUIREMENTS IN ALL AREAS NOT INDICATED ON THIS PLAN.

ALL DIMENSIONS NOTED ON PLAN ARE TO THE CENTERLINE OF RECEPTACLE OR UTILITY CENTER (UNLESS SHOWN OTHERWISE)

*SPECIFICATIONS MAY INCLUDE DATA, SEE ELECTRICAL SCHEDULE THIS SHEET

SEE SHEETS SED.1 - SED.4 FOR DENTAL EQUIPMENT DETAILS

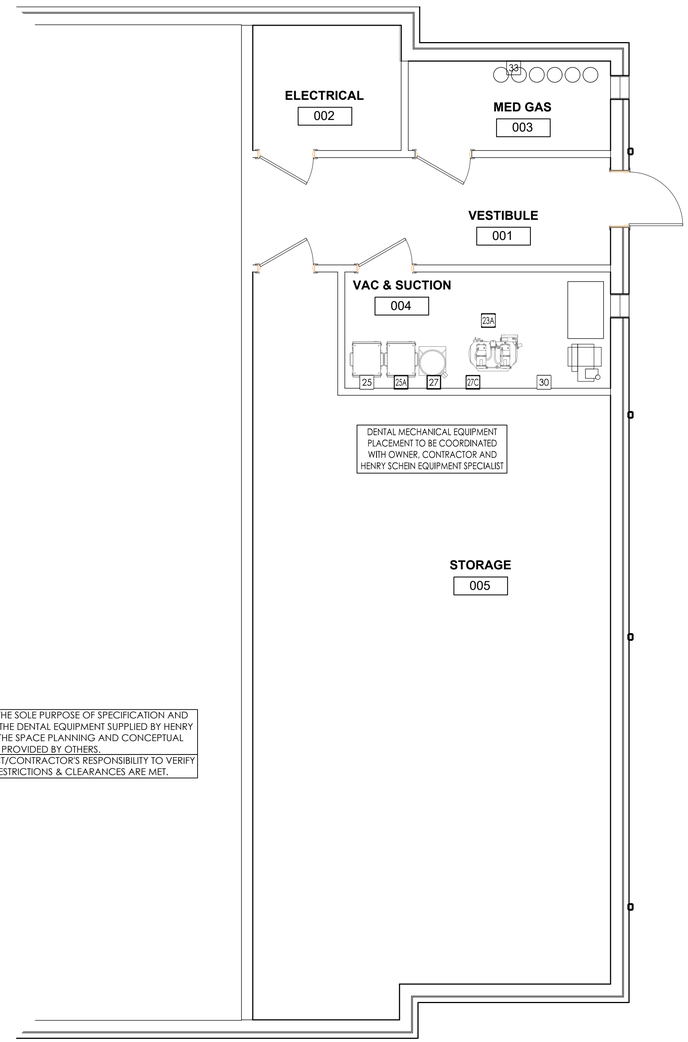

THIS PLAN IS FOR THE SOLE PURPOSE OF SPECIFICATION AND INSTALLATION OF THE DENTAL EQUIPMENT SUPPLIED BY HENRY SCHEIN DENTAL. THE SPACE PLANNING AND CONCEPTUAL DESIGN HAS BEEN PROVIDED BY OTHERS.
IT IS THE ARCHITECT/CONTRACTOR'S RESPONSIBILITY TO VERIFY THAT ALL CODE RESTRICTIONS & CLEARANCES ARE MET.

PROPOSED BASEMENT ELECTRICAL PLAN

1/4"=1'-0"

ELECTRICAL SPECIFICATIONS

PLEASE NOTE: A LICENSED ELECTRICAL CONTRACTOR IS RESPONSIBLE FOR PROVIDING ALL REQUIRED UTILITIES. ALL REQUIREMENTS TO BE VERIFIED BY MANUFACTURER'S SPEC SHEETS PROVIDED BY HENRY SCHEIN DENTAL EQUIPMENT SPECIALIST. MANUFACTURER'S SPECS SUPERSEDE ANY AND ALL INFORMATION CONTAINED HEREIN.

QUANTITY	SPEC. NUMBER	DESCRIPTION	UTILITIES: POWER	DEDICATED CIRCUIT	LOW VOLTAGE CONTROL	DATA DROP	DETAIL
1	23A	EXHAUST FAN FOR DENTAL MECHANICAL CLOSET - SUPPLIED AND INSTALLED BY CONTRACTOR. A THERMOSTAT CONTROLLED FAN IS REQUIRED TO KEEP ROOM TEMPERATURE WITHIN THE EQUIPMENT MANUFACTURER'S RECOMMENDED OPERATING TEMPERATURE RANGE. FAN OUTPUT (CFM) TO BE DETERMINED BY ARCHITECT/ENGINEER. VENT TO OUTSIDE.	115V	•			
1	25	DENTAL AIR COMPRESSOR - SUPPLIED BY HENRY SCHEIN DENTAL, INSTALLED BY CONTRACTOR(S). FOR DENTAL AIR DRIVEN DEVICES. PLUMBER TO PROVIDE 1/2" I.D. COPPER TYPE K OR L SUPPLY LINES TO LOCATIONS THAT REQUIRE AIR. BUCK BOOST TRANSFORMER SUPPLIED AND INSTALLED BY ELECTRICIAN (IF REQ'D). FINAL CONNECTIONS BY CONTRACTOR(S).	230V	20A	•		25
1	25	DENTAL AIR COMPRESSOR - SUPPLIED BY HENRY SCHEIN DENTAL, INSTALLED BY CONTRACTOR(S). FOR DENTAL AIR DRIVEN DEVICES. PLUMBER TO PROVIDE 1/2" I.D. COPPER TYPE K OR L SUPPLY LINES TO LOCATIONS THAT REQUIRE AIR. BUCK BOOST TRANSFORMER SUPPLIED AND INSTALLED BY ELECTRICIAN (IF REQ'D). FINAL CONNECTIONS BY CONTRACTOR(S).	230V	VARY	•		25
1	27	VACUUM PUMP (DRY) - SUPPLIED BY HENRY SCHEIN DENTAL, INSTALLED BY CONTRACTOR(S). VERIFY TRUNK & BRANCH LINE SIZES WITH MFR RECOMMENDATIONS. USE SCH 40 PVC WHERE PERMITTED BY CODE. PLUMBER TO EXHAUST PUMP TO OUTSIDE. BUCK BOOST TRANSFORMER SUPPLIED AND INSTALLED BY ELECTRICIAN (IF REQ'D). DRAIN BY PLUMBER. FINAL CONNECTIONS BY CONTRACTOR(S). PLUMBER TO PROVIDE WATER LINE WITH HOSE BIB NEAR UNIT. SEE DETAIL.	230V	30A	•		27
1	27C	SURGICAL VACUUM PUMP - SUPPLIED BY HENRY SCHEIN DENTAL, INSTALLED BY CONTRACTOR(S). RUN TYPE K OR L COPPER LINES TO TREATMENT ROOM VACUUM OUTLET STATION(S) (28A). ALL LINE SIZED PER MFGR SPECS. EXHAUST PUMP TO OUTSIDE (OPTIONAL). BUCK BOOST TRANSFORMER SUPPLIED AND INSTALLED BY ELECTRICIAN IF REQUIRED. FINAL CONNECTIONS BY CONTRACTOR(S).	230V	20A	•		27C
1	30	REMOTE WATER CONTROL VALVE - SUPPLIED BY HENRY SCHEIN DENTAL, INSTALLED BY PLUMBER ON COLD WATER SUPPLY LINE.	115V		•		30
1	33	NITROUS OXIDE & OXYGEN MANIFOLD/SYSTEM – MANIFOLD SUPPLIED BY HENRY SCHEIN DENTAL, INSTALLED BY ASSE 6010 CERTIFIED PLUMBER. SILVER SOLDERED TYPE K OR L COPPER GAS LINES TO ALL (7) AND/OR (7C) LOCATIONS ON SHEET SP.1. BY ASSE 6010 CERTIFIED PLUMBER. WHERE EMERGENCY SHUT-OFF VALVE IS REQUIRED BY CODE (34A), GAS LINES MUST RUN THERE FIRST. ALL ASPECTS OF SYSTEM & CYLINDER CLOSET MUST FOLLOW CODES FOR LOCATIONS PERFORMING MINIMAL TO MODERATE SEDATION AS DEFINED BY NFPA 99.	115V		•		33

HENRY SCHEIN®
INTEGRATED DESIGN STUDIO
10920 W LINCOLN AVE, WEST ALLIS, WI 53227
henryscheinintegratedadesign.com

PROJECT: **DR. ALAN ARRINGTON**

LOCATION: 222 CHAMBLESS LN, HAMILTON, GA. 31811

HENRY SCHEIN REP: GEORGE HUMMERT

REGION: GA - GEORGIA

PHONE #: (678)-644-7519

-IMPORTANT NOTE-
THIS DOCUMENT HAS BEEN PREPARED AS AN INSTRUMENT OF PROFESSIONAL SERVICE AND **IS NOT AN ARCHITECTURAL PLAN.** THE IDEAS/ DESIGN INCLUDED HEREIN ARE THE SOLE PROPERTY OF HENRY SCHEIN, INC. AND ARE PROTECTED UNDER COPYRIGHT. THESE PLANS MAY NOT BE USED OR REPRODUCED WITHOUT EXPRESSED WRITTEN CONSENT OF HENRY SCHEIN, INC. AND FULL PAYMENT OF ANY ASSOCIATED DESIGN FEES. **ALL DIMENSIONS ARE SUBJECT TO JOB-SITE VERIFICATION.**

PROJECT NUMBER: 23-0142

PROJECT START DATE: 1/20/2023

FINALS START DATE: 1/20/2023

DRAWN BY: ARCH
FINALS BY: TJK
CHECKED BY: ANT

REVISIONS:

1/30/23	TJK
2/7/23	TJK
2/14/23	TJK
2/27/23	TJK
3/3/23	TJK
3/14/23	TJK
5/25/23	ARCH
--/--/--	---
--/--/--	---

INT.SQ.FT.= PER ARCH

SCALE: 1/4"=1'-0" | SHT. SIZE: 24 x 36

DENTAL ELECTRICAL PLAN

SE.3

© 2023 by HENRY SCHEIN, INC.

C:\Users\tom.king\OneDrive - Henry Schein, Inc\Shared Documents - Server_ALL REGIONS\GA Georgia\ARRINGTON, 2023 Space\ARRINGTON 1\ARCH\-FS

(A) COMPRESSED AIR: 1/2" SUPPLY LINE FROM COMPRESSOR BY PLUMBER. STUB-UP FROM FLOOR 1"-2". TERMINATE WITH 3/8" ANGLE VALVE. PRESSURE 100 PSI MAX.

(W) WATER: 1/2" COLD WATER SUPPLY LINE BY PLUMBER. STUB-UP FROM FLOOR 1"-2". TERMINATE WITH 3/8" ANGLE VALVE. PRESSURE 40 PSI MAX.

(E) ELECTRICAL: TWO GANG BOX & 115V DUPLEX OUTLET BY ELECTRICIAN. CHAIR MAX DRAW: 10A

(C) CHASE: GRAY ELECTRICAL PVC PIPE CHASE WITH PULL-STRING BY ELECTRICIAN (SEE SHEET SE.1 FOR SIZE & LOCATIONS). 6" MIN. RADIUS FOR ALL BENDS. STUB-UP FLUSH WITH SUB-FLOOR, MARK LOCATION AT FINISH.

NOTES:
1. DETAIL PROVIDED FOR UTILITY REQUIREMENTS. REFER TO MANUFACTURER'S INSTALLATION GUIDE FOR ADDITIONAL INFORMATION. HENRY SCHEIN DENTAL EQUIPMENT SPECIALIST WILL PROVIDE INSTALLATION TEMPLATE UPON REQUEST.
2. INSTALLATION MUST CONFORM TO ALL LOCAL ELECTRICAL AND PLUMBING CODES.
3. ALL UTILITIES HEREIN TO BE SUPPLIED & INSTALLED BY LICENSED CONTRACTORS. FINAL CONNECTIONS TO EQUIPMENT BY HENRY SCHEIN DENTAL.
4. ALL UTILITIES MUST BE NO HIGHER THAN 4¼" A.F.F. AT FINISH.
5. ALL PLUMBED SYSTEMS MUST BE FLUSHED CLEAN OF ANY DEBRIS PRIOR TO EQUIPMENT INSTALLATION.

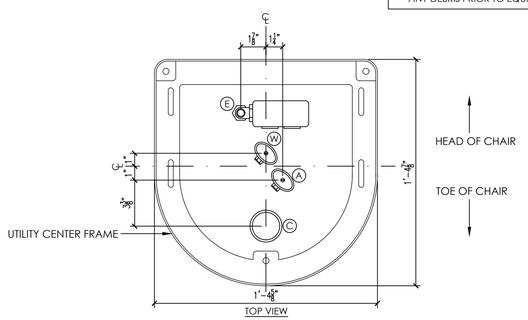

TOP VIEW

2 A-DEC 311,411 CHAIR UTILITIES
NOT TO SCALE

(A) COMPRESSED AIR: 1/2" SUPPLY LINE FROM COMPRESSOR BY PLUMBER. STUB-UP FROM FLOOR 1"-2". TERMINATE WITH 3/8" ANGLE VALVE. PRESSURE 100 PSI MAX.

(W) WATER: 1/2" COLD WATER SUPPLY LINE BY PLUMBER. STUB-UP FROM FLOOR 1"-2". TERMINATE WITH 3/8" ANGLE VALVE. PRESSURE 40 PSI MAX.

(E) ELECTRICAL: TWO GANG BOX & 115V QUAD OUTLET BY ELECTRICIAN. CHAIR MAX DRAW: 10A

(C) CHASE: GRAY ELECTRICAL PVC PIPE CHASE WITH PULL-STRING BY ELECTRICIAN (SEE SHEET SE.1 FOR SIZE & LOCATIONS). 6" MIN. RADIUS FOR ALL BENDS. STUB-UP FLUSH WITH SUB-FLOOR, MARK LOCATION AT FINISH.

NOTES:
1. DETAIL PROVIDED FOR UTILITY REQUIREMENTS. REFER TO MANUFACTURER'S INSTALLATION GUIDE FOR ADDITIONAL INFORMATION. HENRY SCHEIN DENTAL EQUIPMENT SPECIALIST WILL PROVIDE INSTALLATION TEMPLATE UPON REQUEST.
2. INSTALLATION MUST CONFORM TO ALL LOCAL ELECTRICAL AND PLUMBING CODES.
3. ALL UTILITIES HEREIN TO BE SUPPLIED & INSTALLED BY LICENSED CONTRACTORS. FINAL CONNECTIONS TO EQUIPMENT BY HENRY SCHEIN DENTAL.
4. ALL UTILITIES MUST BE NO HIGHER THAN 4¼" A.F.F. AT FINISH.
5. ALL PLUMBED SYSTEMS MUST BE FLUSHED CLEAN OF ANY DEBRIS PRIOR TO EQUIPMENT INSTALLATION.

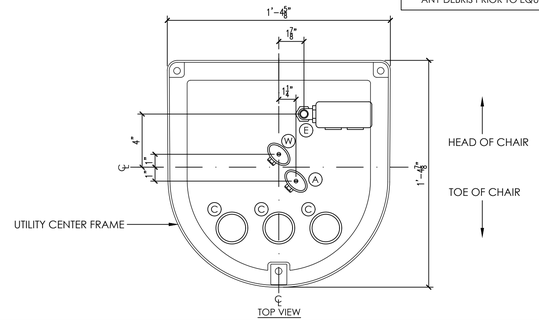

TOP VIEW

2 A-DEC 511B CHAIR UTILITIES
NOT TO SCALE

(A) COMPRESSED AIR: 1/2" SUPPLY LINE FROM COMPRESSOR BY PLUMBER. STUB-UP FROM FLOOR 1"-2". TERMINATE WITH 3/8" ANGLE VALVE. PRESSURE 100 PSI MAX.

(W) WATER: 1/2" COLD WATER SUPPLY LINE BY PLUMBER. STUB-UP FROM FLOOR 1"-2". TERMINATE WITH 3/8" ANGLE VALVE. PRESSURE 40 PSI MAX.

(E) ELECTRICAL: TWO GANG BOX & 115V QUAD OUTLET BY ELECTRICIAN.

(C) CHASE: GRAY ELECTRICAL PVC PIPE CHASE WITH PULL-STRING BY ELECTRICIAN (SEE SHEET SE.1 FOR SIZE & LOCATIONS). 6" MIN. RADIUS FOR ALL BENDS. STUB-UP FLUSH WITH SUB-FLOOR, MARK LOCATION AT FINISH.

NOTES:
1. DETAIL PROVIDED FOR UTILITY REQUIREMENTS. REFER TO MANUFACTURER'S INSTALLATION GUIDE FOR ADDITIONAL INFORMATION. HENRY SCHEIN DENTAL EQUIPMENT SPECIALIST WILL PROVIDE INSTALLATION TEMPLATE UPON REQUEST.
2. INSTALLATION MUST CONFORM TO ALL LOCAL ELECTRICAL AND PLUMBING CODES.
3. ALL UTILITIES HEREIN TO BE SUPPLIED & INSTALLED BY LICENSED CONTRACTORS. FINAL CONNECTIONS TO EQUIPMENT BY HENRY SCHEIN DENTAL.
4. ALL UTILITIES MUST BE NO HIGHER THAN 4½" A.F.F. AT FINISH.
5. ALL PLUMBED SYSTEMS MUST BE FLUSHED CLEAN OF ANY DEBRIS PRIOR TO EQUIPMENT INSTALLATION.

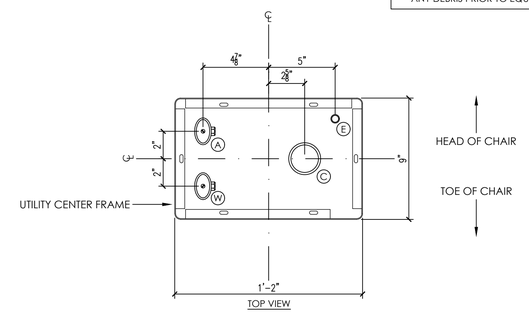

TOP VIEW

2 MARUS CHAIR UTILITIES
NOT TO SCALE

(A) COMPRESSED AIR: 1/2" SUPPLY LINE FROM COMPRESSOR BY PLUMBER. STUB-UP FROM FLOOR 1"-2". TERMINATE WITH 3/8" ANGLE VALVE. PRESSURE 100 PSI MAX.

(W) WATER: 1/2" COLD WATER SUPPLY LINE BY PLUMBER. STUB-UP FROM FLOOR 1"-2". TERMINATE WITH 3/8" ANGLE VALVE. PRESSURE 40 PSI MAX.

(V) CENTRAL VACUUM: 5/8" RISER BY PLUMBER (SCH 40 PVC OR TYPE M COPPER). TERMINATE 1-2' A.F.F.

(E) ELECTRICAL: 16" ELECTRICAL WHIP TERMINATED PER CODE FOR CONNECTION TO MANUFACTURER PROVIDED JUNCTION BOX.

(C) CHASE: GRAY ELECTRICAL PVC PIPE CHASE WITH PULL-STRING BY ELECTRICIAN (SEE SHEET SE.1 FOR SIZE & LOCATIONS). 6" MIN. RADIUS FOR ALL BENDS. STUB-UP FLUSH WITH SUB-FLOOR, MARK LOCATION AT FINISH.

(N) N_2O, O_2 SYSTEM CHECK VALVES: SEE DETAIL 7C FOR MORE INFORMATION. REQUEST VALVES FROM
(O) DENTAL DEALER EQUIPMENT REP FOR INSTALLATION DURING ROUGH-IN. ALL WORK BY ASSE 6010 CERTIFIED PLUMBER.

NOTES:
1. DETAIL PROVIDED FOR UTILITY REQUIREMENTS. REFER TO MANUFACTURER'S INSTALLATION GUIDE FOR ADDITIONAL INFORMATION. HENRY SCHEIN DENTAL REP WILL PROVIDE INSTALLATION TEMPLATE UPON REQUEST.
2. INSTALLATION MUST CONFORM TO ALL LOCAL ELECTRICAL AND PLUMBING CODES.
3. ALL UTILITIES HEREIN TO BE SUPPLIED & INSTALLED BY LICENSED CONTRACTORS. FINAL CONNECTIONS TO EQUIPMENT BY HENRY SCHEIN DENTAL.
4. ALL VALVES, BOXES AND PIPES FROM FLOOR MUST BE NO HIGHER THAN 5" A.F.F.
5. ALL PLUMBED SYSTEMS MUST BE FLUSHED CLEAN OF ANY DEBRIS PRIOR TO EQUIPMENT INSTALLATION.

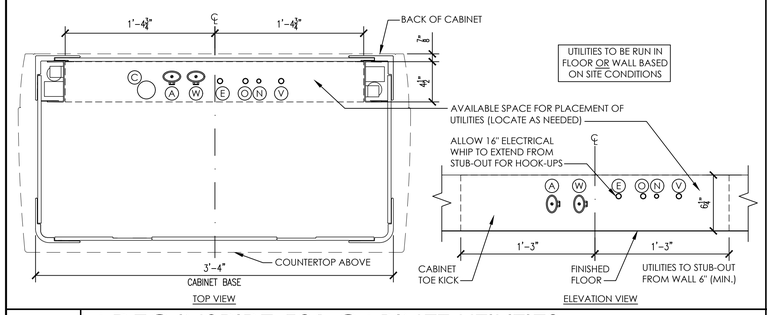

TOP VIEW ELEVATION VIEW

3 ADEC INSPIRE 591 CABINET UTILITIES
NOT TO SCALE

FOLLOW LOCAL CODES FOR ALL WORK.

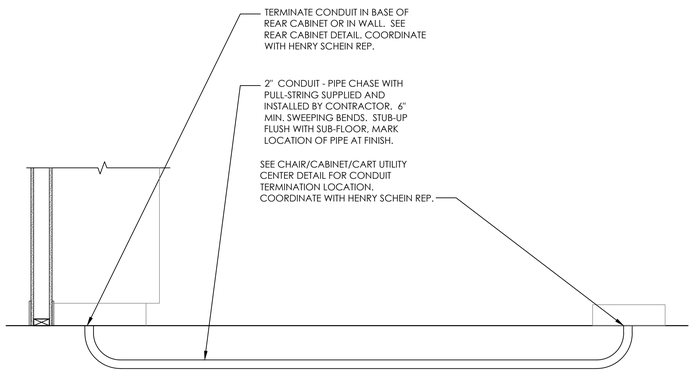

4A SUB-FLOOR CHASE
NOT TO SCALE

FOLLOW LOCAL CODES FOR ALL WORK.

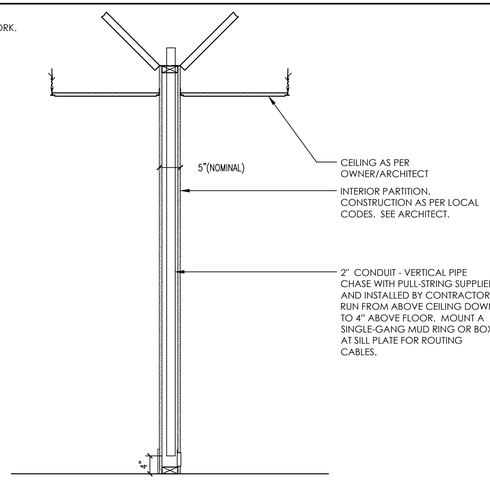

4B VERTICAL CHASE
NOT TO SCALE

FOLLOW LOCAL CODES FOR ALL WORK.

DETAIL PROVIDED FOR UTILITY REQUIREMENTS. REFER TO MANUFACTURER'S INSTALLATION GUIDE FOR ADDITIONAL INFORMATION.

TREATMENT ROOM WALL

ASSE 6010 CERTIFIED PLUMBER TO PROVIDE 3/8" N2O, 1/2" O2 LINES FROM MANIFOLD (33), OR EMERGENCY SHUT-OFF (34A) DEPENDING ON APPLICATION. SEE SHEET SP.1. SEE CABINET UTILITY DETAIL FOR HEIGHTS AND LOCATIONS (WHERE APPLICABLE).

CHECK-VALVES SUPPLIED BY HENRY SCHEIN DENTAL, INSTALLED BY ASSE 6010 CERTIFIED PLUMBER. TERMINATE LINES IN CABINET BASE OR LOCATION SPECIFIED IN CABINET UTILITY DETAIL (WHERE APPLICABLE).

VACUUM LINE RISER BY PLUMBER. TERMINATE IN CABINET BASE. SEE UTILITY CENTER DETAIL FOR HEIGHT & LOCATION (WHERE APPLICABLE). FINAL CONNECTIONS TO EQUIPMENT BY HENRY SCHEIN DENTAL.

NOTES REGARDING DENTAL NITROUS OXIDE & OXYGEN GAS SYSTEMS:

THIS OUTLET STATION IS DESIGNED FOR USE IN LOCATIONS WHERE MINIMAL TO MODERATE SEDATION MAY BE PERFORMED AS DEFINED IN NFPA 99.

ALL ASPECTS OF THIS SYSTEM MUST COMPLY WITH THE CURRENTLY ACCEPTED VERSION OF NFPA 99 IN YOUR STATE/MUNICIPALITY. THESE INCLUDE BUT ARE NOT LIMITED TO:
-MATERIALS/INSTALLATION METHODS
-INSTALLER CERTIFICATIONS (ASSE 6010)
-CYLINDER STORAGE CLOSET REQUIREMENTS
-SYSTEM VERIFICATION & CERTIFICATIONS (ASSE 6030)
-SYSTEM COMPONENT LABELING STANDARDS

IT IS THE ARCHITECT'S RESPONSIBILITY TO ENSURE THAT ALL APPLICABLE CODES ARE MET WITHIN THE CONSTRUCTION DOCUMENTS RELATING TO THE DENTAL NITROUS OXIDE & OXYGEN SYSTEM.

COPIES OF NFPA 99 OR PORTIONS THEREOF MAY BE OBTAINED BY VISITING http://www.nfpa.org, OR CALLING: 1-800-344-3555

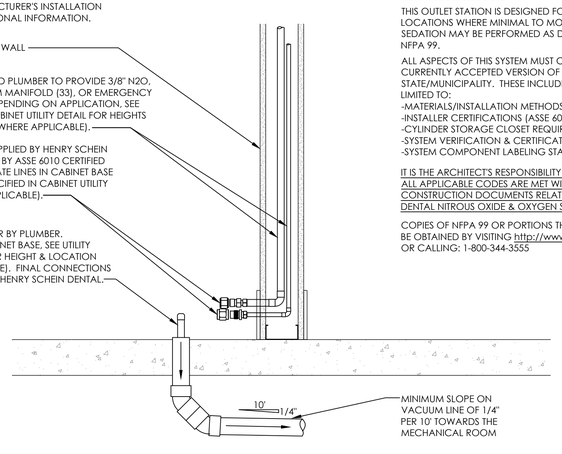

7C N_2O, O_2 SYSTEM TREATMENT ROOM TERMINATIONS
NOT TO SCALE

FOLLOW LOCAL CODES FOR ALL WORK.

DETAIL PROVIDED FOR BLOCKING & UTILITY REQUIREMENTS. REFER TO MANUFACTURER'S INSTALLATION GUIDE FOR ADDITIONAL INFORMATION.

THE WALL FABRICATION AND ATTACHMENTS TO THE BUILDING STRUCTURE MUST BE CAPABLE OF WITHSTANDING A LOAD MOMENT OF 850 FT. LBS., 45 LB. SHEAR LOAD AND 250 LB. WITHDRAWAL FORCE AT EACH OF THE MOUNTING BOLTS. FRAMING SHOULD ALLOW ALL FOUR MOUNTING BOLTS TO ENTER SOLID WOOD. MOUNTING MATERIALS SUPPLIED AND INSTALLED BY CONTRACTOR.

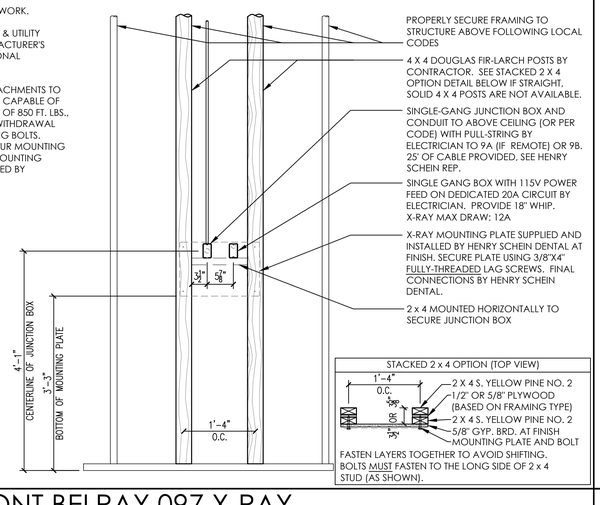

9 BELMONT BELRAY 097 X-RAY
NOT TO SCALE

FOLLOW LOCAL CODES FOR ALL WORK.

DETAIL PROVIDED FOR UTILITY REQUIREMENTS. REFER TO MANUFACTURER'S INSTALLATION GUIDE FOR ADDITIONAL INFORMATION.

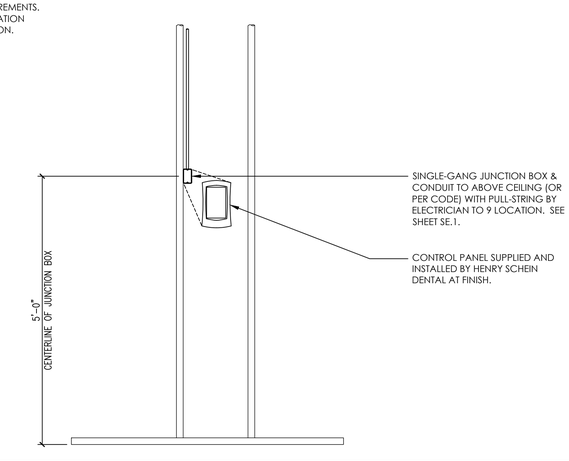

9A X-RAY CONTROL PANEL
NOT TO SCALE

HENRY SCHEIN®
INTEGRATED DESIGN STUDIO
10920 W LINCOLN AVE. WEST ALLIS, WI 53227
henryscheinintegratedesign.com

PROJECT: **DR. ALAN ARRINGTON**

LOCATION: 222 CHAMBLESS LN., HAMILTON, GA. 31811

HENRY SCHEIN REP: GEORGE HUMMERT

REGION: GA - GEORGIA

PHONE #: (678)-644-7519

-IMPORTANT NOTE-
THIS DOCUMENT HAS BEEN PREPARED AS AN INSTRUMENT OF PROFESSIONAL SERVICE AND **IS NOT AN ARCHITECTURAL PLAN.** THE IDEAS/ DESIGN INCLUDED HEREIN ARE THE SOLE PROPERTY OF HENRY SCHEIN, INC. AND ARE PROTECTED UNDER COPYRIGHT. THESE PLANS MAY NOT BE USED OR REPRODUCED WITHOUT EXPRESSED WRITTEN CONSENT OF HENRY SCHEIN, INC. AND FULL PAYMENT OF ANY ASSOCIATED DESIGN FEES. **ALL DIMENSIONS ARE SUBJECT TO JOB-SITE VERIFICATION.**

PROJECT NUMBER: 23-0142

PROJECT START DATE: 1/20/2023

FINALS START DATE: 1/20/2023

DRAWN BY: ARCH
FINALS BY: TJK
CHECKED BY: ANT

REVISIONS:

1/30/23	TJK
2/7/23	TJK
2/14/23	TJK
2/27/23	TJK
3/3/23	TJK
3/14/23	TJK
5/25/23	ARCH
--/--/--	---
--/--/--	---

INT.SQ.FT.= PER ARCH

SCALE: SEE DETAIL | SHT. SIZE: 24 x 36

DENTAL EQUIP. DETAILS

SED.1

© 2023 by HENRY SCHEIN, INC.

C:\Users\tom.kroy\OneDrive - Henry Schein, Inc\Shared Documents - Sierra_ALL REGIONS\GA Georgia\ARRINGTON, 2023 Space\ARRINGTON-1\ARCH.DS

FOLLOW LOCAL CODES FOR ALL WORK.

DETAIL PROVIDED FOR UTILITY REQUIREMENTS. REFER TO MANUFACTURER'S INSTALLATION GUIDE FOR ADDITIONAL INFORMATION.

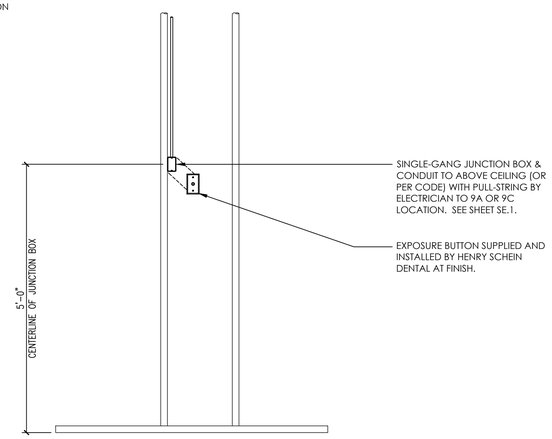

9B X-RAY EXPOSURE BUTTON

NOT TO SCALE

FOLLOW LOCAL CODES FOR ALL WORK.

DETAIL PROVIDED FOR BLOCKING & UTILITY REQUIREMENTS. REFER TO MANUFACTURER'S INSTALLATION GUIDE FOR ADDITIONAL INFORMATION.

MOUNTING MATERIALS SUPPLIED AND INSTALLED BY CONTRACTOR.

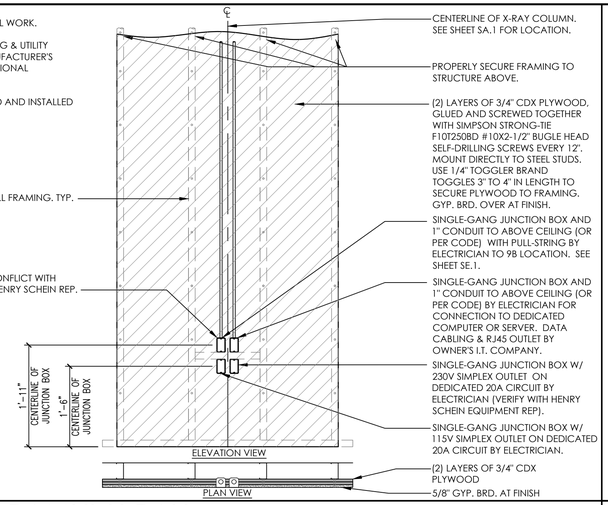

9C PANORAMIC X-RAY

NOT TO SCALE

FOLLOW LOCAL CODES FOR ALL WORK.

DETAIL PROVIDED FOR UTILITY REQUIREMENTS.

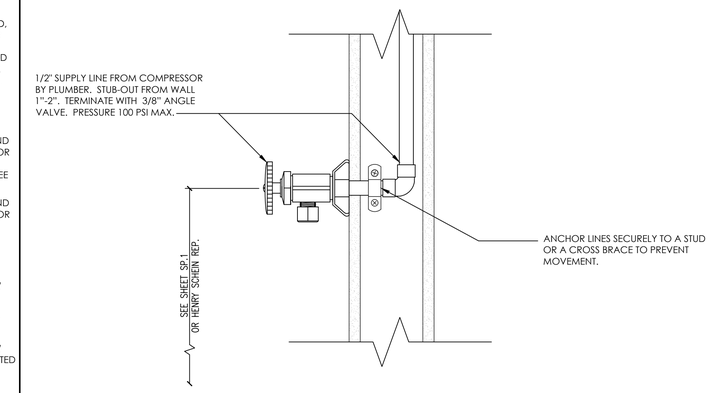

13 DENTAL AIR LINE

NOT TO SCALE

(A) COMPRESSED AIR: 1/2" SUPPLY LINE FROM COMPRESSOR BY PLUMBER. STUB-OUT FROM WALL 1"-2". TERMINATE WITH 3/8" ANGLE VALVE. PRESSURE 100 PSI MAX.

(W) WATER: 1/2" COLD WATER SUPPLY LINE BY PLUMBER. STUB-OUT FROM WALL 1"-2". TERMINATE WITH 3/8" ANGLE VALVE. PRESSURE 40 PSI MAX.

(V) CENTRAL VACUUM: 3/4" VACUUM LINE RISER FROM MAIN TRUNK LINE BY CONTRACTOR. SECURE TO FRAMING TO PREVENT MOVEMENT. TERMINATE 1-2' FROM FINISHED WALL WITH A 3/4" FNPT FITTING. CAP FOR FUTURE.

(E) ELECTRICAL: SEE NOTES PROVIDED ON ELEVATIONS BELOW. COORDINATE WITH CABINET DRAWINGS PROVIDED BY HENRY SCHEIN REP.

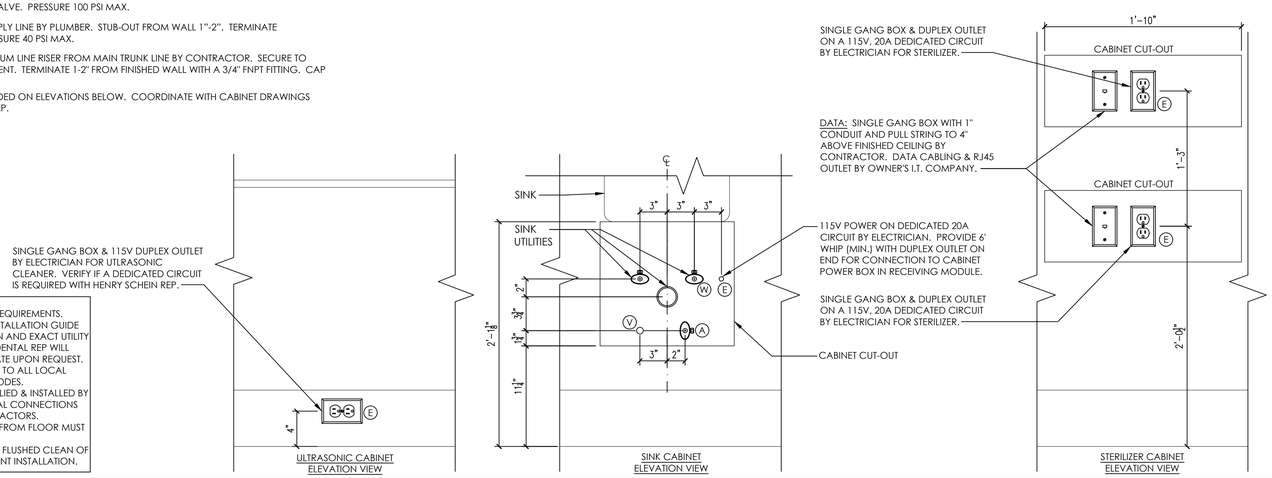

NOTES:
1. DETAIL PROVIDED FOR UTILITY REQUIREMENTS. REFER TO MANUFACTURER'S INSTALLATION GUIDE FOR ADDITIONAL INFORMATION AND EXACT UTILITY PLACEMENTS. HENRY SCHEIN DENTAL REP WILL PROVIDE INSTALLATION TEMPLATE UPON REQUEST.
2. INSTALLATION MUST CONFORM TO ALL LOCAL ELECTRICAL AND PLUMBING CODES.
3. ALL UTILITIES HEREIN TO BE SUPPLIED & INSTALLED BY LICENSED CONTRACTORS. FINAL CONNECTIONS OF CABINET UTILITIES BY CONTRACTORS.
4. ALL VALVES, BOXES AND PIPES FROM FLOOR MUST BE NO HIGHER THAN 6" A.F.F.
5. ALL PLUMBED SYSTEMS MUST BE FLUSHED CLEAN OF ANY DEBRIS PRIOR TO EQUIPMENT INSTALLATION.

14C A-DEC 594 INSPIRE STERILIZATION CENTER UTILITIES

NOT TO SCALE

PRODUCT SPECIFICATIONS	
MODEL	V7502
TANK SIZE (W/O FITTINGS) W X L X H	14" X 13" X 14"
TANK VOLUME	3 GALLONS
WEIGHT	28 LBS

NOTE:
ALL DRAIN AND FEED LINES PROVIDED WITH UNIT

FOLLOW LOCAL CODES FOR ALL WORK.

DETAIL PROVIDED FOR UTILITY REQUIREMENTS. REFER TO MANUFACTURER'S INSTALLATION GUIDE FOR ADDITIONAL INFORMATION.

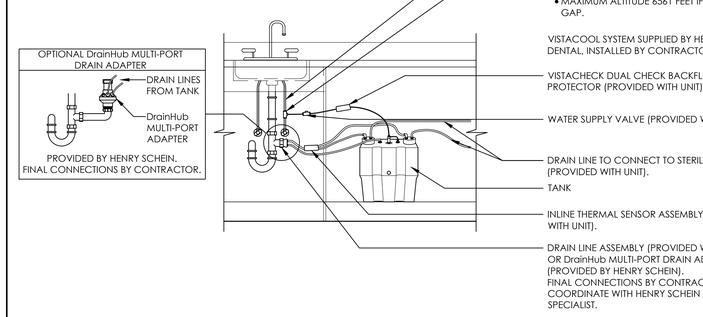

14D VISTACOOL V7502 DIRECT-TO-DRAIN SYSTEM

NOT TO SCALE

FOLLOW LOCAL CODES FOR ALL WORK.

DETAIL PROVIDED FOR UTILITY REQUIREMENTS. REFER TO MANUFACTURER'S INSTALLATION GUIDE FOR ADDITIONAL INFORMATION.

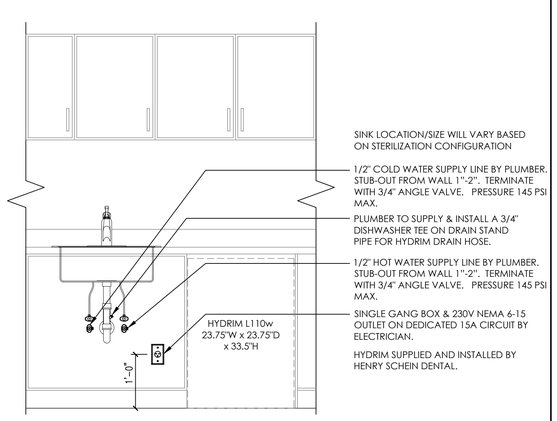

15A SCICAN HYDRIM L110w WASHER DISINFECTOR

NOT TO SCALE

FOLLOW LOCAL CODES FOR ALL WORK.

DETAIL PROVIDED FOR UTILITY REQUIREMENTS. REFER TO MANUFACTURER'S INSTALLATION GUIDE FOR ADDITIONAL INFORMATION.

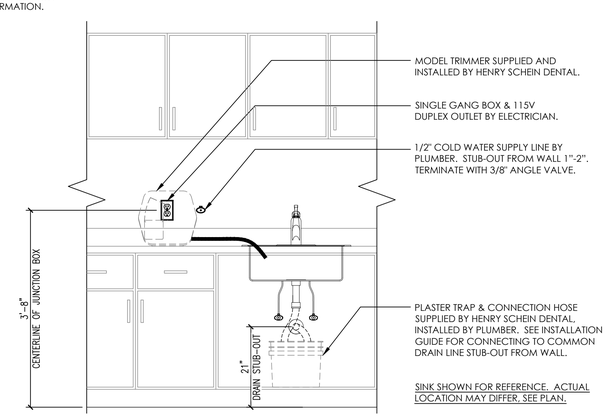

16 MODEL TRIMMER & DISPOSABLE PLASTER TRAP

NOT TO SCALE

FOLLOW LOCAL CODES FOR ALL WORK.

DETAIL PROVIDED FOR UTILITY REQUIREMENTS. REFER TO MANUFACTURER'S INSTALLATION GUIDE FOR ADDITIONAL INFORMATION.

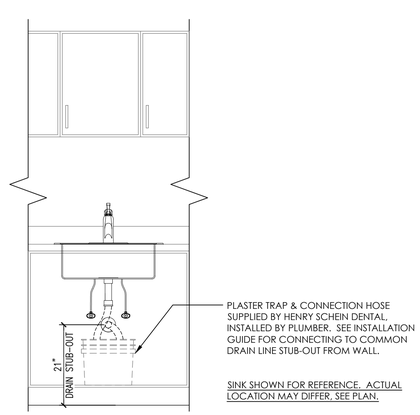

17 DISPOSABLE PLASTER TRAP

NOT TO SCALE

HENRY SCHEIN®
INTEGRATED DESIGN STUDIO
10920 W LINCOLN AVE, WEST ALLIS, WI 53227
henryscheinintegratedesign.com

PROJECT: **DR. ALAN ARRINGTON**

LOCATION: 222 CHAMBLESS LN, HAMILTON, GA. 31811

HENRY SCHEIN REP: GEORGE HUMMERT

REGION: GA - GEORGIA

PHONE #: (678)-644-7519

-IMPORTANT NOTE-
THIS DOCUMENT HAS BEEN PREPARED AS AN INSTRUMENT OF PROFESSIONAL SERVICE AND **IS NOT AN ARCHITECTURAL PLAN.** THE IDEAS/ DESIGN INCLUDED HEREIN ARE THE SOLE PROPERTY OF HENRY SCHEIN, INC. AND ARE PROTECTED UNDER COPYRIGHT. THESE PLANS MAY NOT BE USED OR REPRODUCED WITHOUT EXPRESSED WRITTEN CONSENT OF HENRY SCHEIN, INC. AND FULL PAYMENT OF ANY ASSOCIATED DESIGN FEES. **ALL DIMENSIONS ARE SUBJECT TO JOB-SITE VERIFICATION.**

PROJECT NUMBER: 23-0142

PROJECT START DATE: 1/20/2023

FINALS START DATE: 1/20/2023

DRAWN BY: ARCH
FINALS BY: TJK
CHECKED BY: ANT

REVISIONS:

1/30/23	TJK
2/7/23	TJK
2/14/23	TJK
2/27/23	TJK
3/3/23	TJK
3/14/23	TJK
5/25/23	ARCH
--/--/--	---
--/--/--	---

INT.SQ.FT.= PER ARCH

SCALE: SEE DETAIL | SHT. SIZE: 24 x 36

DENTAL EQUIP. DETAILS

SED.2

© 2023 by HENRY SCHEIN, INC.

C:\Users\tom.kong\OneDrive - Henry Schein, Inc\Shared Documents - Server_ALL REGIONS\GA Georgia\ARRINGTON, 2023 Space\ARRINGTON.1\ARCH.rvt

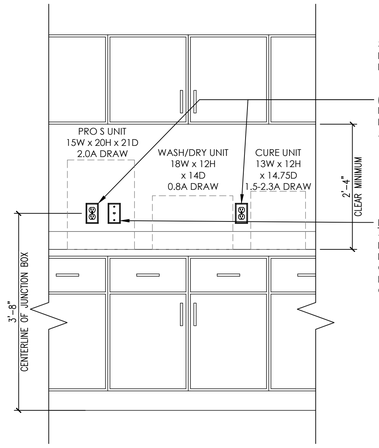

3D PRINTER UNITS SUPPLIED AND INSTALLED BY HENRY SCHEIN DENTAL.

(2)SINGLE GANG BOXES & 115V DUPLEX OUTLETS BY ELECTRICIAN. COMBINED MAX. AMP DRAW: 5.1A

DATA: SINGLE GANG BOX AT 44" A.F.F. WITH 1" CONDUIT AND PULL STRING TO 4" ABOVE FINISHED CEILING BY CONTRACTOR. DATA DROP & RJ45 OUTLET BY OWNER'S I.T. COMPANY.

19 SPRINTRAY PRO S 3D PRINTER SYSTEM

NOT TO SCALE

FOLLOW LOCAL CODES FOR ALL WORK.

DETAIL PROVIDED FOR UTILITY REQUIREMENTS. REFER TO MANUFACTURER'S INSTALLATION GUIDE FOR ADDITIONAL INFORMATION.

UNIT HAS THE ABILITY TO CONNECT TO THE OFFICE NETWORK. CONSULT WITH OWNER AND HENRY SCHEIN REP. DATA CABLING AND JACK PROVIDED BY OWNER'S I.T. COMPANY.

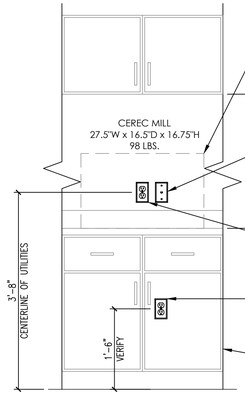

DENTAL MILL SUPPLIED AND INSTALLED BY HENRY SCHEIN DENTAL.

DATA (OPTIONAL): SINGLE GANG BOX AT 44" A.F.F. WITH 1" CONDUIT AND PULL STRING TO 4" ABOVE FINISHED CEILING BY CONTRACTOR. DATA CABLING & RJ45 OUTLET BY OWNER'S I.T. COMPANY. SEE HENRY SCHEIN REP.

SINGLE GANG BOX & 115V DUPLEX OUTLET BY ELECTRICIAN. MAX DRAW 3.5A.

SINGLE GANG BOX & 115V DUPLEX OUTLET BY ELECTRICIAN FOR SUCTION UNIT. MAX DRAW 6.4A.

CABINETRY MUST BE BUILT TO CARRY A 100 LB LOAD.

20 CEREC MILLING UNIT

NOT TO SCALE

FOLLOW LOCAL CODES FOR ALL WORK.

DETAIL PROVIDED FOR UTILITY REQUIREMENTS. REFER TO MANUFACTURER'S INSTALLATION GUIDE FOR ADDITIONAL INFORMATION.

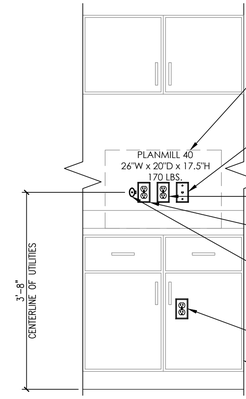

DENTAL MILL SUPPLIED AND INSTALLED BY HENRY SCHEIN DENTAL.

DATA (OPTIONAL): SINGLE GANG BOX AT 44" A.F.F. WITH 1" CONDUIT AND PULL STRING TO 4" ABOVE FINISHED CEILING BY CONTRACTOR. DATA CABLING & RJ45 OUTLET BY OWNER'S I.T. COMPANY. SEE HENRY SCHEIN REP.

SINGLE GANG BOX & 115V DUPLEX OUTLET ON DEDICATED 20A CIRCUIT BY ELECTRICIAN. MAX DRAW 8.3A.

SINGLE GANG BOX & 220V DUPLEX OUTLET ON DEDICATED 20A CIRCUIT BY ELECTRICIAN. MAX DRAW 8.3A.

1/2" AIR SUPPLY LINE FROM COMPRESSOR BY PLUMBER. STUB-OUT FROM WALL 1"-2". TERMINATE WITH 3/8" ANGLE VALVE.

SINGLE GANG BOX & 115V DUPLEX OUTLET BY ELECTRICIAN FOR SUCTION UNIT. MAX DRAW 6.4A.

CABINETRY MUST BE BUILT TO CARRY A 200 LB LOAD.

20A PLANMECA PLANMILL 40 UNIT

NOT TO SCALE

FOLLOW LOCAL CODES FOR ALL WORK.

DETAIL PROVIDED FOR UTILITY REQUIREMENTS. REFER TO MANUFACTURER'S INSTALLATION GUIDE FOR ADDITIONAL INFORMATION.

UNIT HAS THE ABILITY TO CONNECT TO THE OFFICE NETWORK. CONSULT WITH OWNER AND HENRY SCHEIN REP. DATA CABLING AND JACK PROVIDED BY OWNER'S I.T. COMPANY.

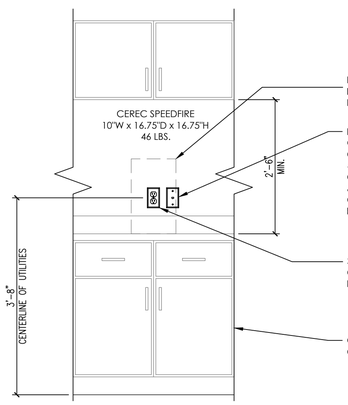

DENTAL FURNACE SUPPLIED AND INSTALLED BY HENRY SCHEIN DENTAL.

DATA (OPTIONAL): SINGLE GANG BOX AT 44" A.F.F. WITH 1" CONDUIT AND PULL STRING TO 4" ABOVE FINISHED CEILING BY CONTRACTOR. DATA CABLING & RJ45 OUTLET BY OWNER'S I.T. COMPANY. SEE HENRY SCHEIN REP.

SINGLE GANG BOX & 115V DUPLEX OUTLET ON DEDICATED 20A CIRCUIT BY ELECTRICIAN. MAX DRAW 12A.

CABINETRY MUST BE BUILT TO CARRY A 50 LB LOAD.

21 CEREC SPEEDFIRE FURNACE

NOT TO SCALE

THIS COMPRESSOR IS DESIGNED AS A SUPPORT GAS SYSTEM TO DRIVE DENTAL TOOLS AND SUPPLY AIR-DRIVEN EQUIPMENT AS DESCRIBED WITHIN NFPA 99. DENTAL AIR IS NOT A MEDICAL GAS.

RIGID CONDUIT TO 6" ABOVE CEILING (OR PER CODE) & 18/4 LOW VOLTAGE WIRE TO REMOTE SHUT-OFF BY ELECTRICIAN.

2" REMOTE AIR INTAKE BY PLUMBER. RUN TO EXTERIOR. PROTECT EXTERIOR PIPING FROM OUTDOOR ELEMENTS AS NEEDED.

TWO GANG BOX & 230V, 20A DEDICATED CIRCUIT BY ELECTRICIAN. POWER IS HARDWIRED. ELECTRICIAN TO SUPPLY DISCONNECT BOX IF ELECTRICAL PANEL IS NOT IN MECHANICAL ROOM.

NOTES:
1. DETAIL PROVIDED FOR UTILITY REQUIREMENTS. REFER TO MANUFACTURER'S INSTALLATION GUIDE FOR ADDITIONAL INFORMATION.
2. INSTALLATION MUST CONFORM TO ALL LOCAL ELECTRICAL AND PLUMBING CODES.
3. FINAL CONNECTIONS TO BE MADE BY LICENSED CONTRACTORS.
4. MECHANICAL ROOM MUST BE KEPT BETWEEN 40°-104° F. A THERMOSTAT CONTROLLED EXHAUST FAN IS RECOMMENDED. SPECIFICATIONS PER MECHANICAL ENGINEER.
5. PROVIDE A BUCK-BOOST TRANSFORMER IF FACILITY SERVICE DOES NOT FALL WITHIN THE RECOMMENDED SUPPLY VOLTAGE FLUCTUATION OF ± 10% OF NOMINAL VOLTAGE RATINGS LISTED. VERIFY SUPPLIER OF BUCK-BOOST TRANSFORMER WITH HENRY SCHEIN EQUIPMENT SPECIALIST.

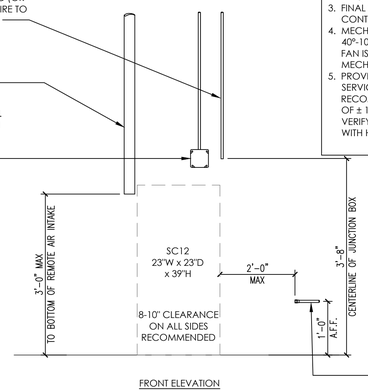

1/2" TYPE "K" OR "L" COPPER AIR LINE TO TREATMENT ROOMS AND 1/2" FNPT END FITTING BY PLUMBER.

PRODUCT SPECIFICATIONS

NOMINAL VAC RATING	230
VOLTAGE MIN/MAX	208/250
FULL LOAD AMPS	16.5
MIN. CIRCUIT BREAKER RATING (AMPS)	20
BTU PER HOUR	7,650

25 A-DEC SC12 COMPRESSOR

NOT TO SCALE

THIS COMPRESSOR IS DESIGNED AS A SUPPORT GAS SYSTEM TO DRIVE DENTAL TOOLS AND SUPPLY AIR-DRIVEN EQUIPMENT AS DESCRIBED WITHIN NFPA 99. DENTAL AIR IS NOT A MEDICAL GAS.

RIGID CONDUIT TO 6" ABOVE CEILING (OR PER CODE) & 18/4 LOW VOLTAGE WIRE TO REMOTE SHUT-OFF BY ELECTRICIAN.

2" REMOTE AIR INTAKE BY PLUMBER. RUN TO EXTERIOR. PROTECT EXTERIOR PIPING FROM OUTDOOR ELEMENTS AS NEEDED.

TWO GANG BOX & 230V, 20A DEDICATED CIRCUIT BY ELECTRICIAN. POWER IS HARDWIRED. ELECTRICIAN TO SUPPLY DISCONNECT BOX IF ELECTRICAL PANEL IS NOT IN MECHANICAL ROOM.

NOTES:
1. DETAIL PROVIDED FOR UTILITY REQUIREMENTS. REFER TO MANUFACTURER'S INSTALLATION GUIDE FOR ADDITIONAL INFORMATION.
2. INSTALLATION MUST CONFORM TO ALL LOCAL ELECTRICAL AND PLUMBING CODES.
3. FINAL CONNECTIONS TO BE MADE BY LICENSED CONTRACTORS.
4. MECHANICAL ROOM MUST BE KEPT BETWEEN 40°-104° F. A THERMOSTAT CONTROLLED EXHAUST FAN IS RECOMMENDED. SPECIFICATIONS PER MECHANICAL ENGINEER.
5. PROVIDE A BUCK-BOOST TRANSFORMER IF FACILITY SERVICE DOES NOT FALL WITHIN THE RECOMMENDED SUPPLY VOLTAGE FLUCTUATION OF ± 10% OF NOMINAL VOLTAGE RATINGS LISTED. VERIFY SUPPLIER OF BUCK-BOOST TRANSFORMER WITH HENRY SCHEIN EQUIPMENT SPECIALIST.

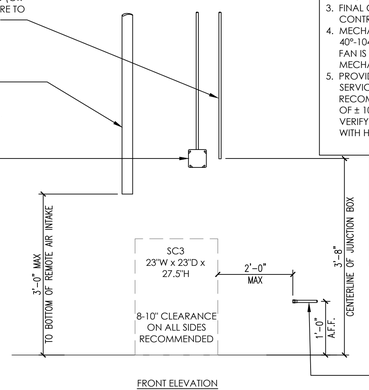

1/2" TYPE "K" OR "L" COPPER AIR LINE TO TREATMENT ROOMS AND 1/2" FNPT END FITTING BY PLUMBER.

PRODUCT SPECIFICATIONS

NOMINAL VAC RATING	230
VOLTAGE MIN/MAX	215/240
FULL LOAD AMPS	6
MIN. CIRCUIT BREAKER RATING (AMPS)	15
BTU PER HOUR	2,600

25A A-DEC SC3 COMPRESSOR

NOT TO SCALE

RIGID CONDUIT TO 6" ABOVE CEILING (OR PER CODE) & 18/4 LOW VOLTAGE WIRE TO REMOTE SHUT-OFF BY ELECTRICIAN.

2" EXHAUST VENT BY PLUMBER. RUN TO EXTERIOR. PROTECT EXTERIOR PIPING FROM OUTDOOR ELEMENTS AS NEEDED.

TWO GANG BOX & 230V, 30A DEDICATED CIRCUIT BY ELECTRICIAN. POWER IS HARDWIRED. ELECTRICIAN TO SUPPLY DISCONNECT BOX IF ELECTRICAL PANEL IS NOT IN MECHANICAL ROOM.

1/2" WATER SUPPLY LINE BY CONTRACTOR. TERMINATE WITH 1/4" ANGLE VALVE WITHIN 10' OF TANK.

1½" CLOSED VENTED DRAIN LINE FROM WALL OR FLOOR BY PLUMBER. NO TRAP BEFORE VENT. OR DRAIN LINE WITH P-TRAP AND AIR GAP. OR FLOOR SINK. FOLLOW LOCAL CODES.

NOTES:
1. DETAIL PROVIDED FOR UTILITY REQUIREMENTS. REFER TO MANUFACTURER'S INSTALLATION GUIDE FOR ADDITIONAL INFORMATION.
2. INSTALLATION MUST CONFORM TO ALL LOCAL ELECTRICAL AND PLUMBING CODES.
3. FINAL CONNECTIONS TO BE MADE BY LICENSED CONTRACTOR(S).
4. MECHANICAL ROOM MUST BE KEPT BETWEEN 40°-104° F. A THERMOSTAT CONTROLLED EXHAUST FAN IS RECOMMENDED. SPECIFICATIONS PER MECHANICAL ENGINEER.
5. PROVIDE A BUCK-BOOST TRANSFORMER IF FACILITY SERVICE DOES NOT FALL WITHIN THE RECOMMENDED SUPPLY VOLTAGE FLUCTUATION OF ± 10% OF NOMINAL VOLTAGE RATINGS LISTED. VERIFY SUPPLIER OF BUCK-BOOST TRANSFORMER WITH HENRY SCHEIN EQUIPMENT SPECIALIST.

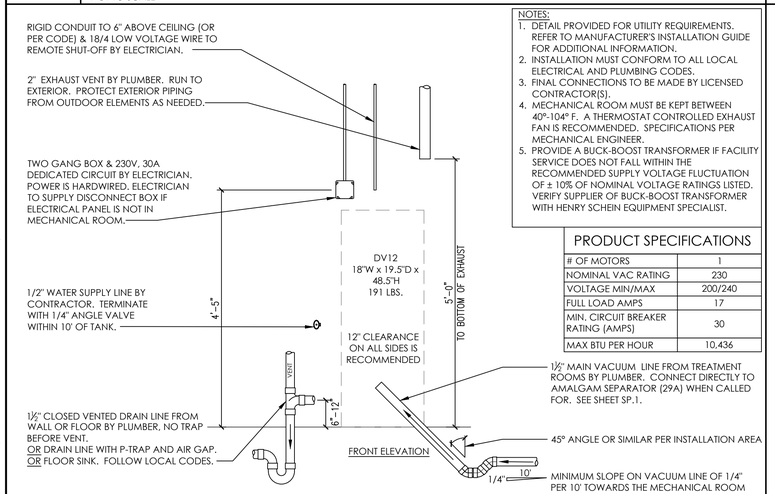

1½" MAIN VACUUM LINE FROM TREATMENT ROOMS BY PLUMBER. CONNECT DIRECTLY TO AMALGAM SEPARATOR (29A) WHEN CALLED FOR. SEE SHEET SP.1.

45° ANGLE OR SIMILAR PER INSTALLATION AREA

MINIMUM SLOPE ON VACUUM LINE OF 1/4" PER 10' TOWARDS THE MECHANICAL ROOM

PRODUCT SPECIFICATIONS

# OF MOTORS	1
NOMINAL VAC RATING	230
VOLTAGE MIN/MAX	200/240
FULL LOAD AMPS	17
MIN. CIRCUIT BREAKER RATING (AMPS)	30
MAX BTU PER HOUR	10,436

27 A-DEC DV12 VACUUM

NOT TO SCALE

1½" TYPE "K" OR "L" COPPER VACUUM LINE FROM 28A LOCATION IN TREATMENT ROOMS BY CONTRACTOR. TERMINATE IN MECH. ROOM 36" A.F.F.

RIGID CONDUIT TO 6" ABOVE CEILING (OR PER CODE) & 18/4 LOW VOLTAGE WIRE TO REMOTE SHUT-OFF BY ELECTRICIAN.

3/4" EXHAUST VENT BY PLUMBER. RUN TO EXTERIOR. PROTECT EXTERIOR PIPING FROM OUTDOOR ELEMENTS AS NEEDED.

TWO GANG BOX & 230V, 20A DEDICATED CIRCUIT BY ELECTRICIAN. POWER IS HARDWIRED. ELECTRICIAN TO SUPPLY DISCONNECT BOX IF ELECTRICAL PANEL IS NOT IN MECHANICAL ROOM.

NOTES:
1. DETAIL PROVIDED FOR UTILITY REQUIREMENTS. REFER TO MANUFACTURER'S INSTALLATION GUIDE FOR ADDITIONAL INFORMATION.
2. INSTALLATION MUST CONFORM TO ALL LOCAL ELECTRICAL AND PLUMBING CODES.
3. FINAL CONNECTIONS TO BE MADE BY LICENSED CONTRACTOR(S).
4. MECHANICAL ROOM MUST BE KEPT BETWEEN 40°-104° F. A THERMOSTAT CONTROLLED EXHAUST FAN IS RECOMMENDED. SPECIFICATIONS PER MECHANICAL ENGINEER.
5. PROVIDE A BUCK-BOOST TRANSFORMER IF FACILITY SERVICE DOES NOT FALL WITHIN THE RECOMMENDED SUPPLY VOLTAGE FLUCTUATION OF ± 10% OF NOMINAL VOLTAGE RATINGS LISTED. VERIFY SUPPLIER OF BUCK-BOOST TRANSFORMER WITH HENRY SCHEIN EQUIPMENT SPECIALIST.

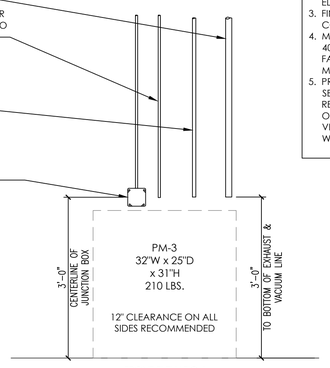

PRODUCT SPECIFICATIONS

NOMINAL VAC RATING	230
VOLTAGE MIN/MAX	208/230
FULL LOAD AMPS	9.7
MIN. CIRCUIT BREAKER RATING (AMPS)	20

27C MIDMARK POWERMAX PM-3 VACUUM

NOT TO SCALE

FOLLOW LOCAL CODES FOR ALL WORK.

DETAIL PROVIDED FOR UTILITY REQUIREMENTS. REFER TO MANUFACTURER'S INSTALLATION GUIDE FOR ADDITIONAL INFORMATION.

3/4" PLYWOOD BLOCKING MAY BE REQUIRED IF A COLLECTION CANISTER WILL BE USED. SEE HENRY SCHEIN REP.

RECESSED D.I.S.S. VACUUM OUTLET STATION SUPPLIED BY HENRY SCHEIN DENTAL. INSTALLED BY PLUMBER. SECURE TO FRAMING DURING PLUMBING ROUGH-IN. INSTALL FACEPLATE AT FINISH. SEE SHEET SP.1 OR HENRY SCHEIN REP FOR HEIGHTS.

1/2" O.D. VACUUM LINE FROM MAIN TRUNK LINE BY PLUMBER.

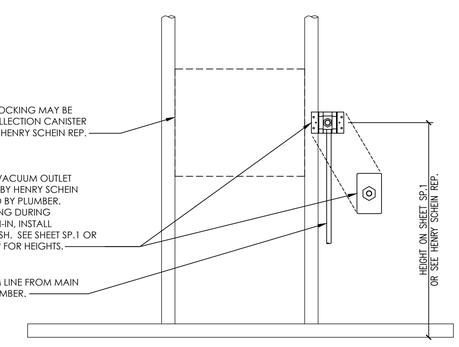

28A RECESSED VACUUM OUTLET STATION

NOT TO SCALE

HENRY SCHEIN®
INTEGRATED DESIGN STUDIO
10920 W LINCOLN AVE. WEST ALLIS, WI 53227
henryscheinintegratedadesign.com

PROJECT: **DR. ALAN ARRINGTON**

LOCATION: 222 CHAMBLESS LN. HAMILTON, GA. 31811

HENRY SCHEIN REP: GEORGE HUMMERT

REGION: GA - GEORGIA

PHONE #: (678)-644-7519

-IMPORTANT NOTE-
THIS DOCUMENT HAS BEEN PREPARED AS AN INSTRUMENT OF PROFESSIONAL SERVICE AND **IS NOT AN ARCHITECTURAL PLAN.** THE IDEAS/ DESIGN INCLUDED HEREIN ARE THE SOLE PROPERTY OF HENRY SCHEIN, INC. AND ARE PROTECTED UNDER COPYRIGHT. THESE PLANS MAY NOT BE USED OR REPRODUCED WITHOUT EXPRESSED WRITTEN CONSENT OF HENRY SCHEIN, INC. AND FULL PAYMENT OF ANY ASSOCIATED DESIGN FEES. **ALL DIMENSIONS ARE SUBJECT TO JOB-SITE VERIFICATION.**

PROJECT NUMBER: 23-0142

PROJECT START DATE: 1/20/2023

FINALS START DATE: 1/20/2023

DRAWN BY: ARCH
FINALS BY: TJK
CHECKED BY: ANT

REVISIONS:

1/30/23	TJK
2/7/23	TJK
2/14/23	TJK
2/27/23	TJK
3/3/23	TJK
3/14/23	TJK
5/25/23	ARCH
--/--/--	---
--/--/--	---

INT.SQ.FT.= PER ARCH

SCALE: SEE DETAIL | SHT. SIZE: 24 x 36

DENTAL EQUIP. DETAILS

SED.3

© 2023 by HENRY SCHEIN, INC.

C:\Users\tonyk\OneDrive - Henry Schein, Inc\Shared Documents - Servert_ALL REGIONS\GA Georgia\ARRINGTON, 2023 Space\ARRINGTON.1\ARCH.D5

FOLLOW LOCAL CODES FOR ALL WORK.

DETAIL PROVIDED FOR UTILITY REQUIREMENTS. REFER TO MANUFACTURER'S INSTALLATION GUIDE FOR ADDITIONAL INFORMATION.

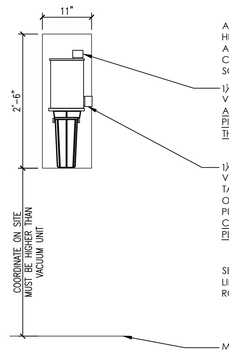

AMALGAM SEPARATOR SUPPLIED BY HENRY SCHEIN DENTAL. INSTALLATION AND FINAL CONNECTIONS BY PLUMBER. COORDINATE LOCATION WITH HENRY SCHEIN TECHNICIAN.

1½" INLET FOR CONNECTION TO MAIN VACUUM LINE. USE PROVIDED INLET AND OUTLET COUPLINGS WITH FLEX PIPING, DO NOT GLUE PLUMBING TO THE NXT HG5 INLET OR OUTLET.

1½" OUTLET FOR CONNECTION TO WET RING VACUUM INLET OR DRY VACUUM COLLECTION TANK. MOUNT SEPARATOR SO THAT THIS OUTLET IS HIGHER THAN THE VACUUM TANK OR PUMP INLET. USE PROVIDED INLET AND OUTLET COUPLINGS WITH FLEX PIPING, DO NOT GLUE PLUMBING TO THE NXT HG5 INLET OR OUTLET.

SEE VACUUM PUMP DETAIL FOR VACUUM LINE TERMINATION FROM TREATMENT ROOMS.

MECHANICAL ROOM FLOOR

FRONT ELEVATION

29A SOLMETEX NXT Hg5 AMALGAM SEPARATOR

NOT TO SCALE

FOLLOW LOCAL CODES FOR ALL WORK.

DETAIL PROVIDED FOR UTILITY REQUIREMENTS. REFER TO MANUFACTURER'S INSTALLATION GUIDE FOR ADDITIONAL INFORMATION.

RIGID CONDUIT (AS NEEDED OR PER CODE) & 18/4 LOW VOLTAGE WIRE TO REMOTE SHUT-OFF BY ELECTRICIAN.

(2) 3/4" MNPT X 3/4" SWEAT ADAPTERS SUPPLIED BY HENRY SCHEIN DENTAL, INSTALLED BY PLUMBER ON BUILDING SUPPLY LINE.

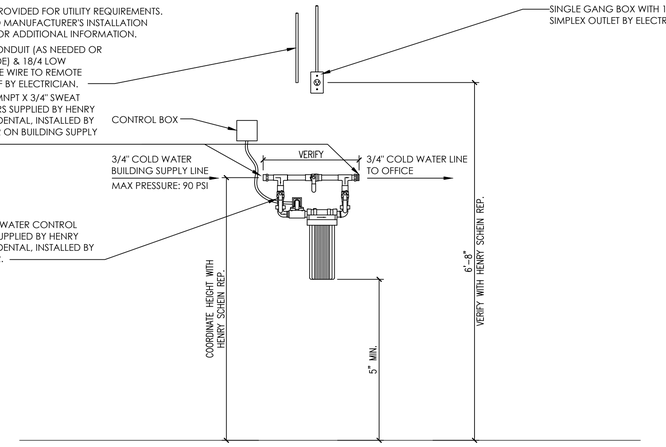

30 A-DEC REMOTE WATER CONTROL VALVE

NOT TO SCALE

FOLLOW LOCAL CODES FOR ALL WORK.

DETAIL PROVIDED FOR UTILITY REQUIREMENTS. REFER TO MANUFACTURER'S INSTALLATION GUIDE FOR ADDITIONAL INFORMATION.

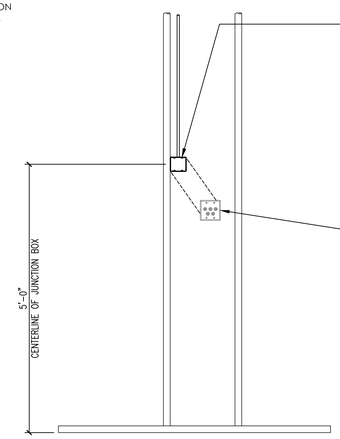

TWO GANG BOX & CONDUIT TO ABOVE CEILING (OR PER CODE) BY ELECTRICIAN.
(5) SETS OF 18/4 LOW VOLTAGE WIRE TO MECHANICAL CLOSET BY ELECTRICIAN FOR (2) VACUUM MOTORS, (2) COMPRESSORS AND WATER VALVE CONTROL. PROVIDE SLACK WITHIN BOX FOR FINAL CONNECTIONS.

NOTE: WHEN DISTANCE TO MECHANICAL CLOSET EXCEEDS 150', USE 16/4 LOW VOLTAGE WIRE.

(2)AIR, (2) VACUUM AND WATER REMOTE SHUT-OFF KIT SUPPLIED BY HENRY SCHEIN DENTAL. FINAL CONNECTIONS BY HENRY SCHEIN DENTAL (OR PER LOCAL CODE). REFER TO MANUFACTURER'S INSTALLATION GUIDE FOR WIRING DIAGRAM.

NOTE: WHEN USING WET-RING VACUUM PUMPS, THE VACUUM SWITCH MUST BE LOCKED OUT BY THE WATER SWITCH TO INSURE THAT WATER IS AVAILABLE BEFORE THE VACUUM STARTS.

32 MECHANICAL REMOTE SHUT-OFF (5 SWITCH)

NOT TO SCALE

FOLLOW LOCAL CODES FOR ALL WORK.

DETAIL PROVIDED FOR UTILITY REQUIREMENTS. REFER TO MANUFACTURER'S INSTALLATION GUIDE FOR ADDITIONAL INFORMATION.

ELECTRICIAN TO RUN CAT6 CABLING BETWEEN N2O/O2 SYSTEM MANIFOLD AND ALARM PANEL. 100' IS PROVIDED, SEE HENRY SCHEIN REP. LEAVE 12' OF CABLE ON EACH END FOR FINAL CONNECTIONS. PROVIDE 3/4" RIGID CONDUIT BETWEEN LOCATIONS IF PLENUM SPACE IS INACCESSIBLE OR WHERE REQUIRED BY CODE.

115V SIMPLEX OUTLET BY ELECTRICIAN

MANIFOLD SUPPLIED BY HENRY SCHEIN DENTAL, INSTALLED BY ASSE 6010 CERTIFIED PLUMBER.

CYLINDER RESTRAINTS SUPPLIED AND INSTALLED BY HENRY SCHEIN DENTAL.

CONTRACTOR TO PROVIDE 2x10 BLOCKING IN WALL FOR CYLINDER RESTRAINTS

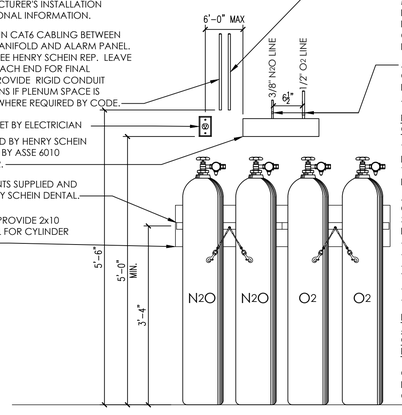

WHERE AN EMERGENCY SHUT-OFF IS REQUIRED BY CODE: ELECTRICIAN TO RUN CAT6 CABLING BETWEEN EMERGENCY SHUT-OFF AND N2O/O2 SYSTEM MANIFOLD. 100' IS PROVIDED BY MANUFACTURER, SEE HENRY SCHEIN REP. LEAVE 12' OF CABLE ON EACH END FOR FINAL CONNECTIONS. PROVIDE 3/4" RIGID CONDUIT BETWEEN LOCATIONS IF PLENUM SPACE IS INACCESSIBLE OR WHERE REQUIRED BY CODE.

ASSE 6010 CERTIFIED PLUMBER TO RUN LINES TO OUTLET STATIONS (7), D.I.S.S. VALVES (7C), OR EMERGENCY SHUT-OFF (34A) DEPENDING ON APPLICATION. SEE SHEET SP.1.

NOTES REGARDING DENTAL NITROUS OXIDE & OXYGEN GAS SYSTEMS:

THIS NITROUS OXIDE AND OXYGEN SYSTEM IS DESIGNED FOR USE IN LOCATIONS WHERE MINIMAL TO MODERATE SEDATION MAY BE PERFORMED AS DEFINED IN NFPA 99.

ALL ASPECTS OF THIS SYSTEM MUST COMPLY WITH THE CURRENTLY ACCEPTED VERSION OF NFPA 99 IN YOUR STATE/MUNICIPALITY. THESE INCLUDE BUT ARE NOT LIMITED TO:
-MATERIALS/INSTALLATION METHODS
-INSTALLER CERTIFICATIONS (ASSE 6010)
-CYLINDER STORAGE CLOSET CONSTRUCTION & VENTILATION REQUIREMENTS
-SYSTEM VERIFICATION CERTIFICATIONS (ASSE 6030)
-SYSTEM COMPONENT LABELING STANDARDS

IT IS THE ARCHITECT'S RESPONSIBILITY TO ENSURE THAT ALL APPLICABLE CODES ARE MET WITHIN THE CONSTRUCTION DOCUMENTS RELATING TO THE NITROUS OXIDE & OXYGEN GAS SYSTEM.

COPIES OF NFPA 99 OR PORTIONS THEREOF MAY BE OBTAINED BY VISITING http://www.nfpa.org, OR CALLING: 1-800-344-3555

33 ACCUTRON DIGI-FLOW N_2O,O_2 SYSTEM MANIFOLD

NOT TO SCALE

FOLLOW LOCAL CODES FOR ALL WORK.

DETAIL PROVIDED FOR UTILITY REQUIREMENTS. REFER TO MANUFACTURER'S INSTALLATION GUIDE FOR ADDITIONAL INFORMATION.

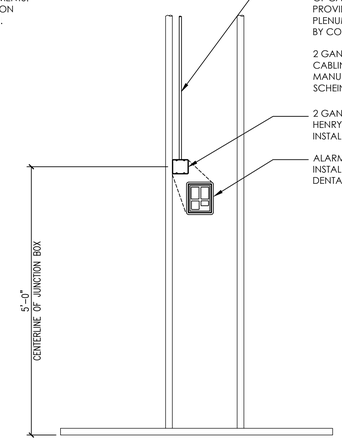

ELECTRICIAN TO RUN CAT6 CABLING BETWEEN ALARM PANEL AND N2O/O2 SYSTEM MANIFOLD. LEAVE 12' OF CABLE ON EACH END FOR FINAL CONNECTIONS. PROVIDE RIGID CONDUIT BETWEEN LOCATIONS IF PLENUM SPACE IS INACCESSIBLE OR WHERE REQUIRED BY CODE.

2 GANG BOX AND 100' OF CAT6 CABLING IS PROVIDED BY MANUFACTURER, SEE HENRY SCHEIN EQUIPMENT SPECIALIST.

2 GANG BOX SUPPLIED BY HENRY SCHEIN DENTAL, INSTALLED BY CONTRACTOR.

ALARM PANEL SUPPLIED AND INSTALLED BY HENRY SCHEIN DENTAL.

34 ACCUTRON N2O, O2 SYSTEM ALARM PANEL

NOT TO SCALE

FOLLOW LOCAL CODES FOR ALL WORK.

DETAIL PROVIDED FOR UTILITY REQUIREMENTS. REFER TO MANUFACTURER'S INSTALLATION GUIDE FOR ADDITIONAL INFORMATION.

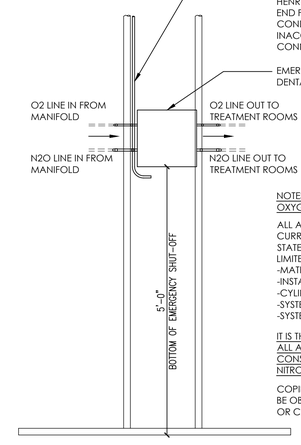

ELECTRICIAN TO RUN CAT6 CABLING BETWEEN EMERGENCY SHUT OFF AND N2O/O2 SYSTEM MANIFOLD. 100' IS PROVIDED BY MANUFACTURER, SEE HENRY SCHEIN REP. LEAVE 12' OF CABLE ON EACH END FOR FINAL CONNECTIONS. PROVIDE 3/4" RIGID CONDUIT BETWEEN LOCATIONS IF PLENUM SPACE IS INACCESSIBLE OR WHERE REQUIRED BY CODE. CONNECTION POINT IS UNDER EMERGENCY SHUT-OFF.

EMERGENCY SHUT-OFF SUPPLIED BY HENRY SCHEIN DENTAL, INSTALLED BY CONTRACTOR.

NOTES REGARDING DENTAL NITROUS OXIDE & OXYGEN GAS SYSTEMS:

ALL ASPECTS OF THIS SYSTEM MUST COMPLY WITH THE CURRENTLY ACCEPTED VERSION OF NFPA 99 IN YOUR STATE/MUNICIPALITY. THESE INCLUDE BUT ARE NOT LIMITED TO:
-MATERIALS/INSTALLATION METHODS
-INSTALLER REQUIREMENTS (ASSE 6010 CERTIFICAITON)
-CYLINDER STORAGE CLOSET REQUIREMENTS
-SYSTEM VERIFICATION (ASSE 6030 CERTIFICATION)
-SYSTEM COMPONENT LABELING STANDARDS

IT IS THE ARCHITECT'S RESPONSIBILITY TO ENSURE THAT ALL APPLICABLE CODES ARE MET WITHIN THE CONSTRUCTION DOCUMENTS RELATING TO THE NITROUS OXIDE CONSCIOUS SEDATION SYSTEM.

COPIES OF NFPA 99 OR PORTIONS THEREOF MAY BE OBTAINED BY VISITING http://www.nfpa.org, OR CALLING: 1-800-344-3555

34A ACCUTRON N2O, O2 EMERGENCY SHUT-OFF

NOT TO SCALE

FOLLOW LOCAL CODES FOR ALL WORK.

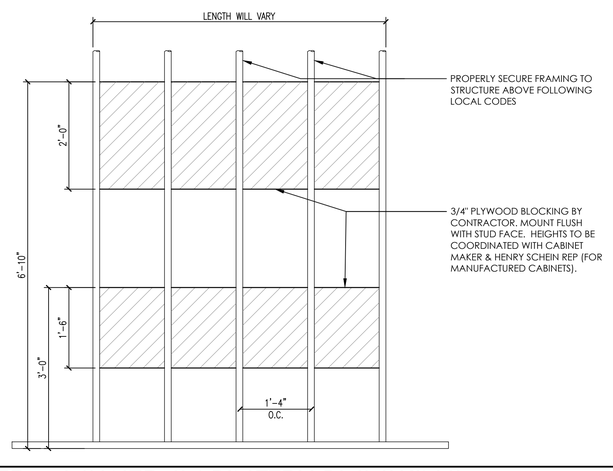

PROPERLY SECURE FRAMING TO STRUCTURE ABOVE FOLLOWING LOCAL CODES

3/4" PLYWOOD BLOCKING BY CONTRACTOR. MOUNT FLUSH WITH STUD FACE. HEIGHTS TO BE COORDINATED WITH CABINET MAKER & HENRY SCHEIN REP (FOR MANUFACTURED CABINETS).

35 UPPER & LOWER CABINETRY BLOCKING

NOT TO SCALE

FOLLOW LOCAL CODES FOR ALL WORK.

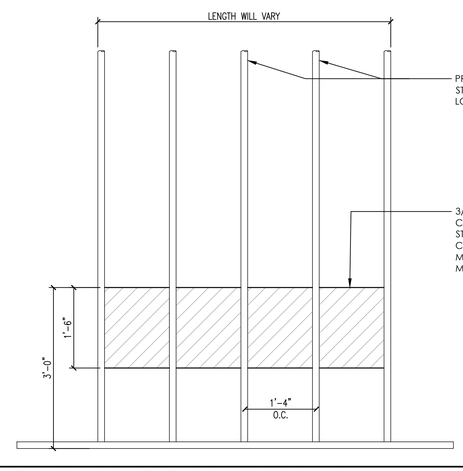

PROPERLY SECURE FRAMING TO STRUCTURE ABOVE FOLLOWING LOCAL CODES

3/4" PLYWOOD BLOCKING BY CONTRACTOR. MOUNT FLUSH WITH STUD FACE. HEIGHTS TO BE COORDINATED WITH CABINET MAKER & HENRY SCHEIN REP (FOR MANUFACTURED CABINETS).

35A LOWER CABINETRY BLOCKING

NOT TO SCALE

HENRY SCHEIN®
INTEGRATED DESIGN STUDIO
10920 W LINCOLN AVE, WEST ALLIS, WI 53227
henryscheinintegratedesign.com

PROJECT: **DR. ALAN ARRINGTON**

LOCATION: 222 CHAMBLESS LN, HAMILTON, GA. 31811

HENRY SCHEIN REP: GEORGE HUMMERT

REGION: GA - GEORGIA

PHONE #: (678)-644-7519

-IMPORTANT NOTE-
THIS DOCUMENT HAS BEEN PREPARED AS AN INSTRUMENT OF PROFESSIONAL SERVICE AND **IS NOT AN ARCHITECTURAL PLAN.** THE IDEAS/ DESIGN INCLUDED HEREIN ARE THE SOLE PROPERTY OF HENRY SCHEIN, INC. AND ARE PROTECTED UNDER COPYRIGHT. THESE PLANS MAY NOT BE USED OR REPRODUCED WITHOUT EXPRESSED WRITTEN CONSENT OF HENRY SCHEIN, INC. AND FULL PAYMENT OF ANY ASSOCIATED DESIGN FEES. **ALL DIMENSIONS ARE SUBJECT TO JOB-SITE VERIFICATION.**

PROJECT NUMBER: 23-0142

PROJECT START DATE: 1/20/2023

FINALS START DATE: 1/20/2023

DRAWN BY: ARCH
FINALS BY: TJK
CHECKED BY: ANT

REVISIONS:

1/30/23	TJK
2/7/23	TJK
2/14/23	TJK
2/27/23	TJK
3/3/23	TJK
3/14/23	TJK
5/25/23	ARCH
--/--/--	---
--/--/--	---

INT.SQ.FT.= PER ARCH

SCALE: SEE DETAIL | SHT. SIZE: 24 x 36

DENTAL EQUIP. DETAILS

SED.4

© 2023 by HENRY SCHEIN, INC.

C:\Users\tom.kirp\OneDrive - Henry Schein, Inc\Shared Documents - Server_ALL REGIONS\GA Georgia\ARRINGTON, 2023 Space\ARRINGTON.1\ARCH\D5