NATIONWIDE CONSTRUCTION GROUP - RENOVATION

201 Griswoldville Industrial Blvd
Macon, GA 31217

Project No. 25022

JULY 11, 2025

ISSUED FOR CONSTRUCTION

VICINITY MAP

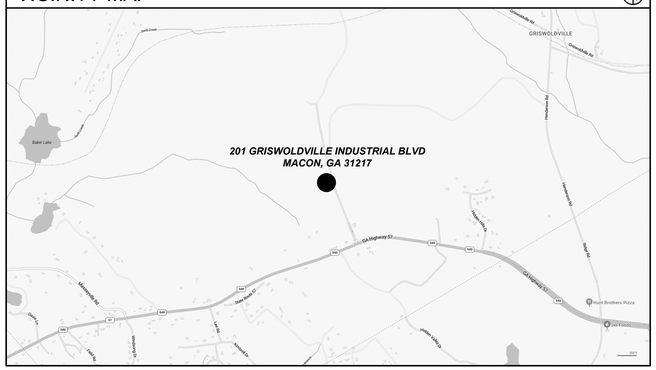

PROJECT DIRECTORY

ARCHITECT

ALL ARCHITECTURE, LLC
2052 CHRYSLER DRIVE NE
ATLANTA, GA 30345

CONTACT: JUAN C. ARCHILA, AIA, NCARB, LEED AP
PHONE: 404-316-2896
E-MAIL: JUAN@ALLARCHLLC.COM

MECHANICAL, PLUMBING & ELECTRICAL ENGINEER

PROFICIENT ENGINEERING
3150 HOLCOMB BRIDGE ROAD
NORCROSS, GA 30071

CONTACT: HEYOUNG LEE
PHONE: 404-330-9798
E-MAIL: HLEE@PROFICIENTENGINEERING.COM

CONTRACTOR

STROUD AND COMPANY
427 8TH ST
MACON, GA 31201

CONTACT: BEN HOLT
PHONE: 478-743-5097
E-MAIL: BHOLT@STROUDANDCOMPANY.COM

OWNER

NATIONWIDE CONSTRUCTION GROUP
201 GRISWOLDVILLE INDUSTRIAL BLVD
MACON, GA 312010

PHONE: 1-800-793-3623

SYMBOL LEGEND

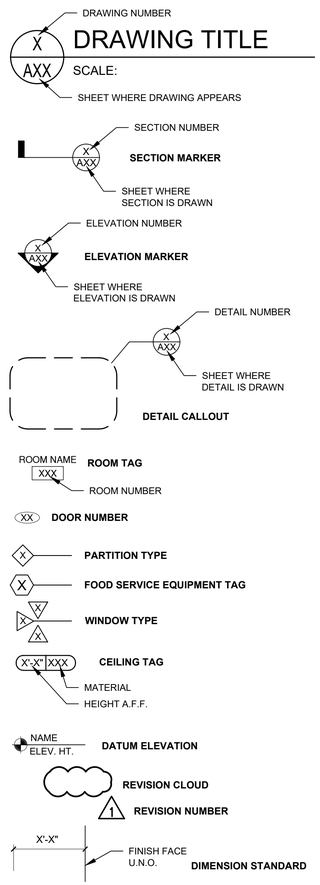

PROJECT SUMMARY

THIS PROJECT IS AN INTERIOR RENOVATION OF AN EXISTING BUILDING, WHICH IS A STORAGE OCUPANCY (S-1, MODERATE HAZARD).

THE SCOPE OF WORK INCLUDES BUT IS NOT LIMITED TO THE FOLLOWING:

- NEW PARTITIONS AND INTERIOR FINISHES
- NEW HVAC
- NEW PLUMBING
- NEW LIGHTING AND POWER

NO EXTERIOR WORK IS PROPOSED IN THIS PHASE

CODE & ZONING SUMMARY

JURISDICTION

JONES COUNTY, GEORGIA

APPLICABLE CODES (MANDATORY U.N.O.)

BUILDING:	INTERNATIONAL BUILDING CODE, 2018 EDITION WITH GA AMENDMENTS (2020)(2022)(2024)(2025)
EXIST. BUILDING: (PERMISSIVE)	INTERNATIONAL EXISTING BUILDING CODE, 2018 EDITION WITH GA AMENDMENTS (2021)
LIFE SAFETY:	NFPA 101 LIFE SAFETY CODE (LSC), 2024 EDITION WITH 2025 GEORGIA STATE FIRE COMMISSIONER MODIFICATIONS 120-3-3.04(72)
FIRE:	INTERNATIONAL FIRE CODE, 2018 EDITION WITH 2020 GEORGIA STATE FIRE COMMISSIONER MODIFICATIONS 120-3-3-.04(3)
MECHANICAL:	INTERNATIONAL MECHANICAL CODE, 2018 EDITION WITH GA AMENDMENTS (2020)(2024)
PLUMBING:	INTERNATIONAL PLUMBING CODE, 2018 EDITION WITH GA AMENDMENTS (2020)(2022)(2023)(2024)
FUEL GAS:	INTERNATIONAL FUEL GAS CODE, 2018 EDITION WITH GA AMENDMENTS (2020)(2022)
ELECTRICAL:	NATIONAL ELECTRIC CODE, 2023 EDITION (NO GA AMENDMENTS)
ENERGY:	INTERNATIONAL ENERGY CONSERVATION CODE, 2015 EDITION WITH GA AMENDMENTS (2020)(2022)(2023)
ACCESSIBILITY:	GEORGIA ACCESSIBILITY CODE 120-3-20 (.01-.08) WITH 2020 GEORGIA STATE FIRE COMMISSIONER AMENDMENTS 120-3-3-.08 THROUGH 11 / 2010 DEPARTMENT OF JUSTICE ADA STANDARDS FOR ACCESSIBLE DESIGN ("2010 ADA")
OTHER:	CURRENT EDITION OF NFPA CODES AND STANDARDS AS ADOPTED AND MODIFIED BY THE STATE FIRE MARSHAL

BUILDING DATA

OCCUPANCY CLASSIFICATION
NFPA 101 LSC CHAPTER 42, STORAGE OCCUPANCIES
SUPPLEMENTARY (PER IBC CHAPTER 3):
S-1 STORAGE (MODERATE HAZARD)

DESCRIPTION: RENOVATION OF EXISTING BUILDING

ZONING CLASSIFICATION
INDUSTRIAL

EXISTING BUILDING INFORMATION

YEAR BUILT:	2011
SPRINKLERS	NO
STANDPIPES (IBC 905, LSC 9.7.4.2)	NO
HIGH RISE (IBC 403)	NO
MEZZANINE (IBC 505)	YES
FIRE ALARM (IBC 907, LSC 9.6)	NO, NOT REQ'D PER LSC 42.3.4.1.2

CONSTRUCTION TYPE:
II-B, (IBC TABLE 602.2)
TYPE II (0,0,0) (LSC TABLE A.8.2.1)

BUILDING HEIGHT:
ALLOWED: 55' (IBC TABLE 504.3)
EXISTING: 24'-0"±

NUMBER OF STORIES:
ALLOWED: 2 (IBC TABLE 504.4)
EXISTING: 1

TOTAL SQUARE FOOTAGE:
ALLOWABLE: 14,000 SF (IBC TABLE 506.2)
EXISTING: 8,400 SF ±

CLIMATE ZONE
3A

CONSTRUCTION SQUARE FOOTAGE
8,400 SF ±

TOTAL OCCUPANCY LOAD (NFPA 101 LSC TABLE 7.3.1.2)
43

REFER TO CALCULATIONS ON LIFE SAFETY PLAN, SHEET A010

OF EXITS REQUIRED: 2
OF EXITS PROVIDED: 7

DEFERRED SUBMITTALS

THE FOLLOWING ITEMS WILL BE SUBMITTED AS DEFERRED SUBMITTALS BY THE APPROPRIATE INSTALLING SUBCONTRACTOR OR VENDOR. SUBCONTRACTOR OR VENDOR SHALL BE RESPONSIBLE FOR DETERMINING SUBMITTAL REQUIREMENTS AND PAYMENT OF ALL FEES FOR SUBMITTALS.

NONE

DRAWING LIST

ARCHITECTURAL

A000	COVER SHEET
A010	LIFE SAFETY PLAN
A020	PARTITION TYPES & ADA DETAILS
A200	AS-BUILT FLOOR PLAN
A210	DEMOLITION FLOOR PLAN
A220	REFERENCE FLOOR PLAN
A221	DIMENSION FLOOR PLAN
A320	REFLECTED CEILING PLAN
A400	INTERIOR DETAILS
A800	DOOR SCHEDULE & DETAILS

MECHANICAL

M001	GENERAL
M002	DETAILS
M003	SCHEDULES
M100	PHASE 1 FLOOR PLAN

PLUMBING

P001	GENERAL
P002	SCHEDULES & DETAILS
P100	PHASE 1 FLOOR PLANS

ELECTRICAL

E001	GENERAL
E002	SCHEDULES
E003	COMCHECK
E100	PHASE 1 FLOOR PLAN - POWER
E110	PHASE 1 FLOOR PLAN - LIGHTING

ABBREVIATIONS

ACT	ACOUSTICAL CEILING TILE
A.F.F.	ABOVE FINISH FLOOR
B.O.J.	BOTTOM OF JOIST
B/W	BETWEEN
CLG	CEILING
CONC.	CONCRETE
DIA.	DIAMETER
DWG(S)	DRAWING, DRAWINGS
E	EXISTING
EA.	EACH
EGSB	EXTERIOR GYPSUM SOFFIT BOARD, PAINTED
ELEC.	ELECTRICAL
E.P.	ELECTRICAL PANEL
EX, EXIST.	EXISTING
FAC	FACTORY
FE	WALL-MOUNTED FIRE EXTINGUISHER
F.O.	FACE OF
GA.	GAUGE
GL	GLASS / GLAZING
GWB	GYPSUM WALL BOARD
HCWD	HOLLOW CORE WOOD DOOR
HT.	HEIGHT
IAW	IN ACCORDANCE WITH
JT.	JOINT
MANUF.	MANUFACTURER
MAT'L	MATERIAL
MECH.	MECHANICAL
MTL	METAL
N	NEW
N.I.C.	NOT IN CONTRACT
O.C.	ON CENTER
OCC	OCCUPANT(S)
O.H.	OPPOSITE HAND
OFCI	OWNER-FURNISHED, CONTRACTOR-INSTALLED
O.T.S.	OPEN TO STRUCTURE
P.T.	PRESSURE-TREATED
PTD	PAINTED
QTY.	QUANTITY
R	RISER
RCP	REFLECTED CEILING PLAN
REQ'D	REQUIRED
SCWD	SOLID CORE WOOD DOOR
SF	SQUARE FEET
SHT.	SHEET
SIM.	SIMILAR
STD	STAINED
STL	STEEL
T	TREAD
U.N.O.	UNLESS NOTED OTHERWISE
V.I.F.	VERIFY IN FIELD
W/	WITH
WD	WOOD

GENERAL NOTES

A. CONTRACTOR SHALL REVIEW ALL CONTRACT DOCUMENTS AND SHALL BE FAMILIAR WITH THE SCOPE AND REQUIREMENTS OF THIS PROJECT. ANY DISCREPANCIES OR LACK OF CLARITY IN THE DOCUMENTS SHALL BE IDENTIFIED TO THE ARCHITECT PRIOR TO THE SUBMISSION OF PRICING BIDS. WITH A SUBMITTED BID, CONTRACTOR IS ACCEPTING THESE DOCUMENTS AS SUFFICIENT DEFINITION OF THE SCOPE OF WORK, AND ANY ADDITIONAL COSTS BASED ON LACK OF CLARITY OF CONTRACT DOCUMENTS WILL NOT BE CONSIDERED.

B.CONTRACTOR SHALL PROVIDE COMPLETE SYSTEMS AND ASSEMBLIES THAT INCLUDE ALL COMPONENTS NECESSARY FOR A FULLY FUNCTIONAL ASSEMBLY SATISFYING THE DESIGN INTENT, COMPLY WITH THE REQUIREMENTS INDICATED IN THE CONTRACT DOCUMENTS AND READY FOR THE INTENDED USE.

C. FIELD VERIFY ALL DIMENSIONS. DO NOT SCALE FROM DRAWINGS.

D. DIMENSIONS ARE INDICATED TO THE CENTERLINE OF STRUCTURAL GRID, FACE OF CAST-IN-PLACE CONCRETE WALL, FACE OF UNIT MASONRY WALL, AND/OR TO THE FINISH FACE OF INTERIOR WALLS AND PARTITIONS AS SCHEDULED, UNLESS NOTED OTHERWISE.

E. ALL PENETRATIONS THROUGH PERIMETER FIRE AND SMOKE BARRIERS SHALL BE SEALED AND PROTECTED PER NFPA 101-8.3.6.

F. CONTRACTOR SHALL COMPLY WITH NFPA 241 & IFC 2018 CHAPTER 14.

G. PROTECT EXISTING FLOOR AND WALL FINISHES TO REMAIN AND PATCH/REPAIR ANY DAMAGE AFTER DEMOLITION

H. SUITE NUMBER SHALL BE DISPLAYED ON ALL EXTERIOR DOORS, INCLUDING REAR DOORS, OF THE TENANT SPACE. THE NUMBERS SHALL BE A MINIMUM OF 4" IN HEIGHT ON A CONTRASTING COLOR IN BACKGROUND.

I. EMERGENCY LIGHTING SHALL COMPLY WITH THE REQUIREMENTS OF NFPA 101 LSC 2024 CHAP. 7 SECT. 7.9.

J. EXIT LIGHTING SHALL COMPLY WITH THE REQUIREMENTS OF NFPA NFPA 101 LSC 2024 CHAP. 7 SECT. 7.10.

K. EXIT LIGHTING AND EMERGENCY LIGHTING WILL BE EVALUATED FOR LOCATION AND REQUIRED LIGHTING INTENSITY AT FINAL INSPECTION BY AUTHORITY HAVING JURISDICTION.

L. PENETRATIONS INTO OR THROUGH EITHER VERTICAL OR HORIZONTAL FIRE RATED BARRIERS SHALL BE PROTECTED BY A SYSTEM LISTED BY A RECOGNIZED TESTING AGENCY. NO PENETRATIONS THROUGH FIRE RATED BARRIERS SHOULD BE PART OF THIS PROJECT, HOWEVER, ALERT ARCHITECT IF IT IS NECESSARY AND AWAIT UL-LISTED DETAIL.

M. CIRCUITS FOR EXIT AND/OR EMERGENCY LIGHTING SHALL BE CONNECTED TO THE LIGHTING CIRCUIT FOR THE AREA THEY SERVE. DEDICATED CIRCUITS ARE NOT PERMITTED. THEY SHALL COMPLY WITH THE REQUIREMENTS OF NFPA 101 LSC 2024 CHAP. 7 SECTION 7/9.2.2 AND SECT. 7.10.4 AND NFPA 70 NEC 2017 CHAP. 700 SECT. 700.17,

N. FIRE EXTINGUISHERS SHALL BE PROVIDED PER THE REQUIREMENTS OF THE OCCUPANCY CHAPTER FOR THIS PROJECT. NFPA 101 LSC 2024 AS AMENDED BY OCGA TITLE 25 120-3-3 FIRE EXTINGUISHERS SHALL BE INSTALLED PER THE REQUIREMENTS OF THE GEORGIA ACCESSIBILITY CODE 2010 120-3-20A CHAP. 3 SECT. 308. FIRE EXTINGUISHERS WILL BE EVALUATED FOR LOCATION AND SIZE AT FINAL INSPECTION.

O. FIRE EXTINGUISHERS SHALL DISPLAY A SERVICE TAG INSTALLED BY A TECHNICIAN CERTIFIED BY THE STATE OF GEORGIA, OCGA TITLE 25. FIRE MARSHALS RULES AND REGULATIONS.

P. INTERIOR WALL AND CEILING FINISHES SHALL BE CLASSIFIED AS FOLLOWS AND SHALL BE RESTRICTED FOR USE BY THE FOLLOWING TABLE AS DEFINED IN NFPA 101 LSC 2024 10.2.3.3:

CLASS	FLAME SPREAD	SMOKE DEVELOPMENT
A	0 - 25	0 - 450
B	26 - 75	0 - 450
C	76 - 200	0 - 450

REQUIRED WALL AND CEILING FINISHES PER PROJECT USE GROUPS ARE AS FOLLOWS (REFERENCE NFPA 101 LSC 10.2). CONTRACTOR TO VERIFY EXISTING AND UPGRADE TO THE FOLLOWING IF NECESSARY:

	FINISH CLASSIFICATION		
USE GROUP	EXIT ENCLOSURES	CORRIDORS	ROOMS
STORAGE	B	C	C

STROUD AND COMPANY
427 8th Street : Macon, Ga 31201
478-743-5097

ALL Architecture, LLC
2052 CHRYSLER DRIVE NE, ATLANTA, GA 30345
TELEPHONE: (404) 316-2896
E-MAIL: INFO@ALLARCHLLC.COM

REVISIONS

NO.	DATE

COPYRIGHT
THIS DRAWING AND ALL REPRODUCTIONS ARE COPYRIGHTED AND THE PROPERTY OF ALL ARCHITECTURE, LLC AND MAY NOT BE REPRODUCED WITHOUT THEIR PERMISSION.

PROJECT TITLE:
NATIONWIDE CONSTRUCTION GROUP - RENOVATION
201 GRISWOLDVILLE INDUSTRIAL BLVD
MACON, GEORGIA 31217

SEAL:
STATE OF GEORGIA
JUAN CAMILO ARCHILA
CERTIFICATE NO. 0419
REGISTERED ARCHITECT
7-11-25

DRAWN: JCA	CHECKED: JCA
APPROVED: JCA	ISSUE DATE: 07/11/25

CAD FILE NAME: 25022.dwg

SHEET TITLE: COVER SHEET

PROJECT NUMBER: 25022.1

SHEET NO: A000

ISSUED FOR CONSTRUCTION

PLOT DATE: 7/13/2025 12:24:04 PM

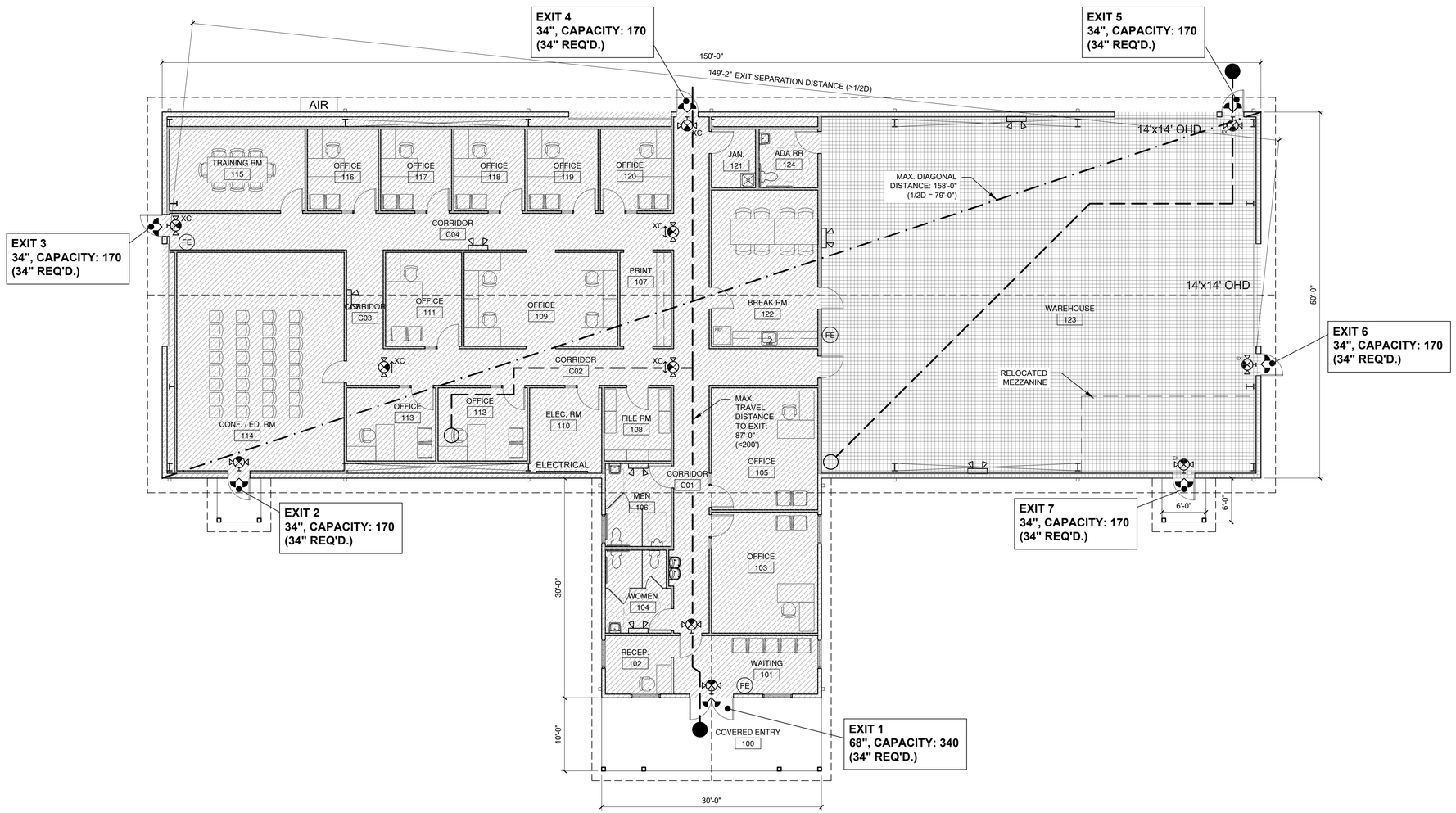

1 A010 LIFE SAFETY PLAN

SCALE: 1/8" = 1'-0"

0 4 8 16

OCCUPANT LOAD (LSC TABLE 7.3.1.2)

LEGEND	AREA (SF)	SF / OCC	OCC. LOAD
OCCUPANCY: BUSINESS	5,388	150	36
OCCUPANCY: STORAGE	3,012	500	7
TOTAL OCCUPANTS			**43**

EGRESS WIDTH
REQUIRED: 34" MIN., PROVIDED: 34" x 8 = 272"

MEANS OF EGRESS NOTES

MEANS OF EGRESS
STORAGE OCCUPANCY, NON-SPRINKLERED BUILDING

# OF EXITS REQ'D / PROVIDED:	2 / 7	NFPA 101 7.4.1
EXIT SEPARATION DISTANCE:	1/2 DIAGONAL	NFPA 101 7.5.1.3.2
COMMON PATH OF TRAVEL	50 FT	NFPA 101 42.2.5
DEAD END CORRIDOR	50 FT	NFPA 101 42.2.5
MAX. TRAVEL DIST. TO EXIT:	200 FT	NFPA 101 42.2.6

GENERAL NOTES

1. COORDINATE PLACEMENT OF EXIT SIGNS AND EMERGENCY FIXTURES W/ ELECTRICAL DRAWINGS

SYMBOL LEGEND

- POINT OF ORIGIN
- POINT OF SAFETY
- PATH OF TRAVEL
- (FE) WALL-MOUNTED FIRE EXTINGUISHER, 5 LB CLASS ABC, LOCATED IAW 75' MAX. TRAVEL DIST. RULE, NFPA 10 TABLE 6.2.1.1
- WALL-MOUNTED COMBO EXIT SIGN
- WALL-MOUNTED EMERGENCY LIGHTING UNIT
- LIT CHEVRON IN DIRECTION OF EGRESS TRAVEL
- REMOTE LAMP HEAD

PLUMBING FIXTURE CALCULATIONS

(IPC TABLE 403.1)
BASED ON:
B BUSINESS OCCUPANCY
43 OCCUPANTS (22 M, 21 F)

BUSINESS

WC: MALES & FEMALES: 1 PER 25 FOR FIRST 50
LAV.: MALES & FEMALES 1 PER 40 FOR FIRST 80

WC REQUIRED / PROVIDED:

MALE: 1 / 2
FEMALE: 1 / 2
UNISEX: 0 / 1

LAV REQUIRED / PROVIDED:

MALE: 1 / 1
FEMALE: 1 / 1
UNISEX: 0 / 1

DRINKING FOUNTAIN REQUIRED / PROVIDED:

1 / 1 BI-LEVEL DRINKING FOUNTAIN

STROUD AND COMPANY
427 8th Street : Macon, Ga 31201
478-743-5097

ALL Architecture, LLC
2052 CHRYSLER DRIVE NE, ATLANTA, GA 30345
TELEPHONE: (404) 316-2896
E-MAIL: INFO@ALLARCHLLC.COM

REVISIONS

NO.	DATE

COPYRIGHT
THIS DRAWING AND ALL REPRODUCTIONS ARE COPYRIGHTED AND THE PROPERTY OF ALL ARCHITECTURE, LLC AND MAY NOT BE REPRODUCED WITHOUT THEIR PERMISSION.

PROJECT TITLE:
NATIONWIDE CONSTRUCTION GROUP - RENOVATION
201 GRISWOLDVILLE INDUSTRIAL BLVD
MACON, GEORGIA 31217

SEAL:
STATE OF GEORGIA
JUAN CAMILO ARCHILA
CERTIFICATE NO. 12113
REGISTERED ARCHITECT
7-11-25

DRAWN:	CHECKED:
JCA	JCA
APPROVED: JCA	ISSUE DATE: 07/11/25

CAD FILE NAME: 25022.dwg

SHEET TITLE: LIFE SAFETY PLAN

PROJECT NUMBER: 25022.1

SHEET NO: A010

ISSUED FOR CONSTRUCTION

PLOT DATE: 7/13/2025 12:20:02 PM

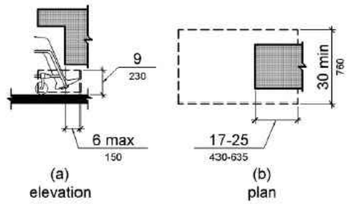

TOE CLEARANCE ADA 2010 FIG. 306.2

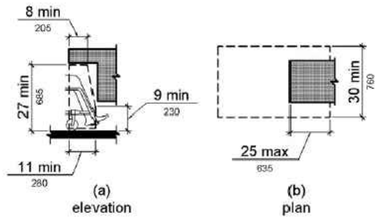

KNEE CLEARANCE ADA 2010 FIG. 306.3

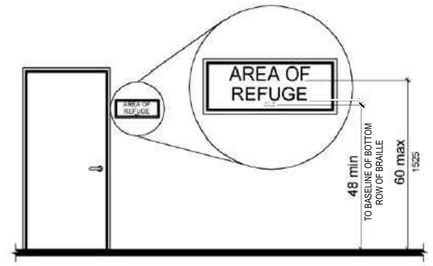

ADA 2010 FIG. 703.4.1
HEIGHT OF TACTILE CHARACTERS ABOVE FINISH FLOOR OR GROUND

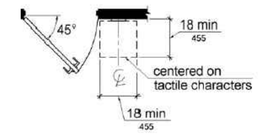

ADA 2010 FIG. 703.4.2
LOCATION OF TACTILE SIGNS AT DOORS

DOOR ACCESSIBILITY REQUIREMENTS ADA 2010 SEC. 404.2

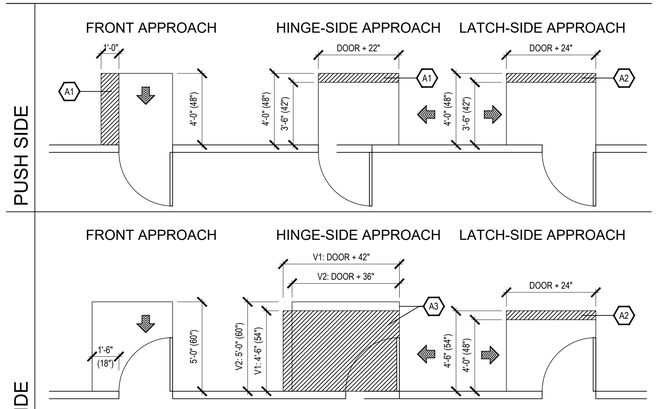

A1 ADDITIONAL CLEAR FLOOR AREA REQUIRED WHEN DOOR HAS BOTH CLOSER AND A LATCH

A2 ADDITIONAL CLEAR FLOOR AREA REQUIRED WHEN DOOR HAS CLOSER

A3 ALTERNATIVE CLEAR FLOOR AREAS BASED ON APPROACH CLEARANCES

CLOSER

EACH DOOR CONTRACTOR(S) (ALUM. STOREFRONT/WOOD/HOLLOW METAL) SHALL BE RESPONSIBLE TO ADJUST ALL INTERIOR DOORS SO THAT THE DOOR'S REQUIRED OPENING FORCE IS 5 lbs OR LESS. ANY DOOR WITH A CLOSER SHALL BE ADJUSTED TO SLOW THE CLOSING TIME TO A MINIMUM OF THREE SECONDS FROM A STARTING POINT OF 70° OPEN TO 3" FROM CLOSING.
REFER TO DIAGRAM:

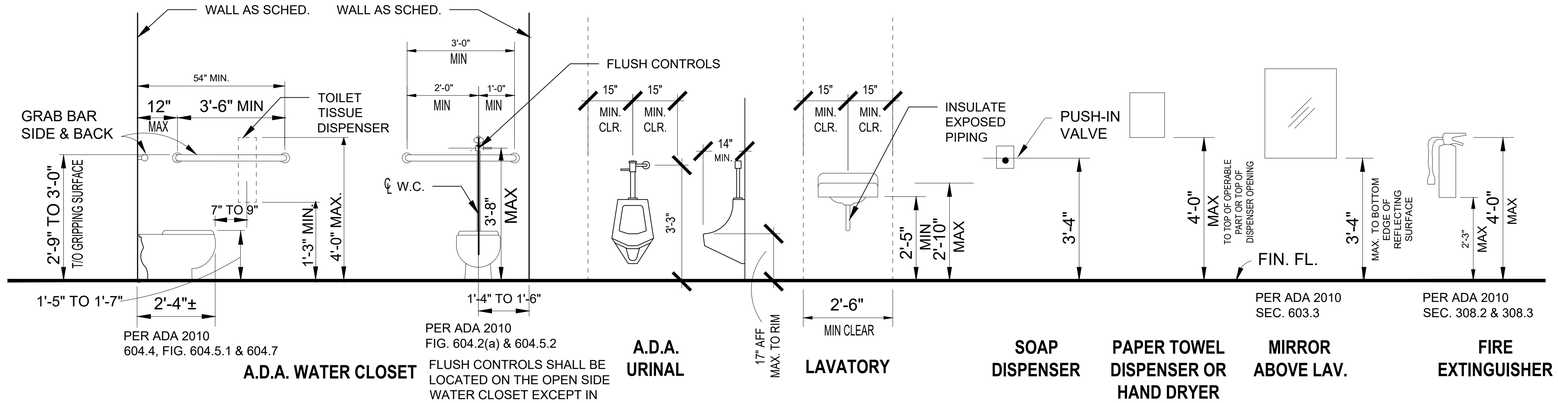

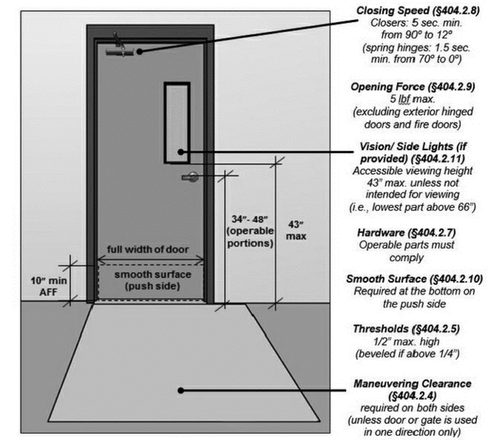

DOOR ACCESSIBILITY DETAIL ELEVATION

NOT TO SCALE

MOUNTING HEIGHTS FOR FIXTURES & ACCESSORIES

SCALE: 1/2" = 1'-0"

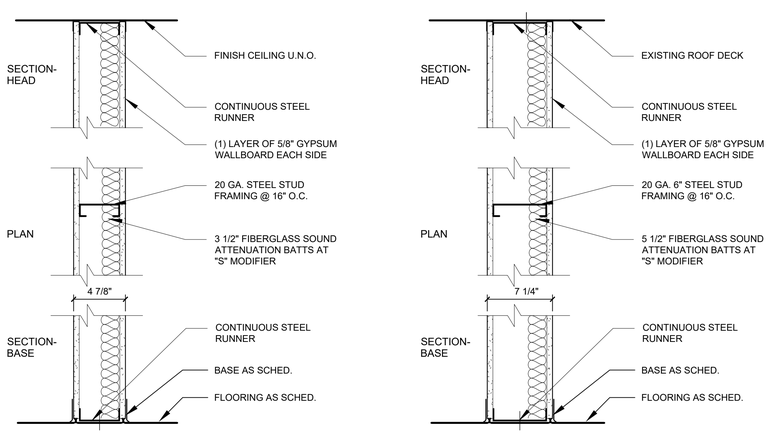

A3 NON-RATED PARTITION
NON-LOAD BEARING, 3 5/8" STEEL STUD

A6 NON-RATED PARTITION
NON-LOAD BEARING, 6" STEEL STUD

B6 NON-RATED PARTITION
NON-LOAD BEARING, 6" STEEL STUD

PARTITION TYPES

SCALE: 1 1/2" = 1'-0"

PARTITION TYPE NOTES

A. EXISTING WALLS MAY NEED REPAIR OR SUPPLEMENTAL FRAMING TO MEET DESIGNATED PARTITION TYPE CRITERIA. CONTRACTOR TO SURVEY EXISTING CONDITIONS PRIOR TO PROCEEDING.

B. PARTITIONS EXTEND UP TO UNDERSIDE OF FLOOR SYSTEM OR STRUCTURE ABOVE U.N.O.

C. ALL STUD CAVITIES ARE TO BE FILLED WITH BATT INSULATION. WRAP ALL OUTLET/SWITCH BOXES AND OTHER WALL PENETRATIONS IN MINERAL WOOL FOR SOUND PURPOSES.

D. NEW PARTITIONS ARE SHOWN HATCHED ON PLANS. COMBINE STUD AND FURRING SIZES TO ATTAIN THICKNESSES OF PARTITION DIMENSIONED ON PLAN.

E. SEE ELEVATIONS, SECTIONS AND OTHER DRAWINGS FOR FEATURES, EXCEPTIONS AND DEVIATIONS FROM PARTITION TYPE DESIGNATIONS.

F. SEAL PARTITIONS TIGHT TO ADJACENT SURFACES TO DISALLOW AIR INFILTRATION TO OR FROM ROOM. PLUG OR SEAL GAPS.

G. FASTENING OF GWB TO COMPLY WITH GYPSUM BOARD MANUFACTURERS INSTALLATION INSTRUCTIONS.

H. PROVIDE MOISTURE RESISTANT GWB IN ALL WET AREAS

J. VERIFY INFILL CONDITIONS & PROVIDE SOLID ATTACHMENT OF NEW PARTITION SEGMENT TO EXISTING.

K. PROVIDE CEMENTITIOUS BACKER BOARD BEHIND TILE.

L. PROVIDE BLOCKING BEHIND WALL FINISH AT ACCESSORIES AND WHERE TRIM AND OTHER FINISHES ARE SHOWN.

STROUD AND COMPANY
427 8th Street : Macon, Ga 31201
478-743-5097

ALL Architecture, LLC
2052 CHRYSLER DRIVE NE, ATLANTA, GA 30345
TELEPHONE: (404) 316-2896
E-MAIL: INFO@ALLARCHLLC.COM

REVISIONS	
NO.	DATE

COPYRIGHT
THIS DRAWING AND ALL REPRODUCTIONS ARE COPYRIGHTED AND THE PROPERTY OF ALL ARCHITECTURE, LLC AND MAY NOT BE REPRODUCED IN ANY WAY WITHOUT THEIR PERMISSION.

PROJECT TITLE:
NATIONWIDE CONSTRUCTION GROUP - RENOVATION
201 GRISWOLDVILLE INDUSTRIAL BLVD
MACON, GEORGIA 31217

SEAL:
STATE OF GEORGIA
JUAN CAMILO ARCHILA
CERTIFICATE NO. 12113
REGISTERED ARCHITECT
7-11-25

DRAWN: JCA	CHECKED: JCA
APPROVED: JCA	ISSUE DATE: 07/11/25

CAD FILE NAME: 25022.dwg

SHEET TITLE: PARTITION TYPES & ADA DETAILS

PROJECT NUMBER: 25022.1

SHEET NO: A020

ISSUED FOR CONSTRUCTION

PLOT DATE: 7/13/2025 12:16:53 PM

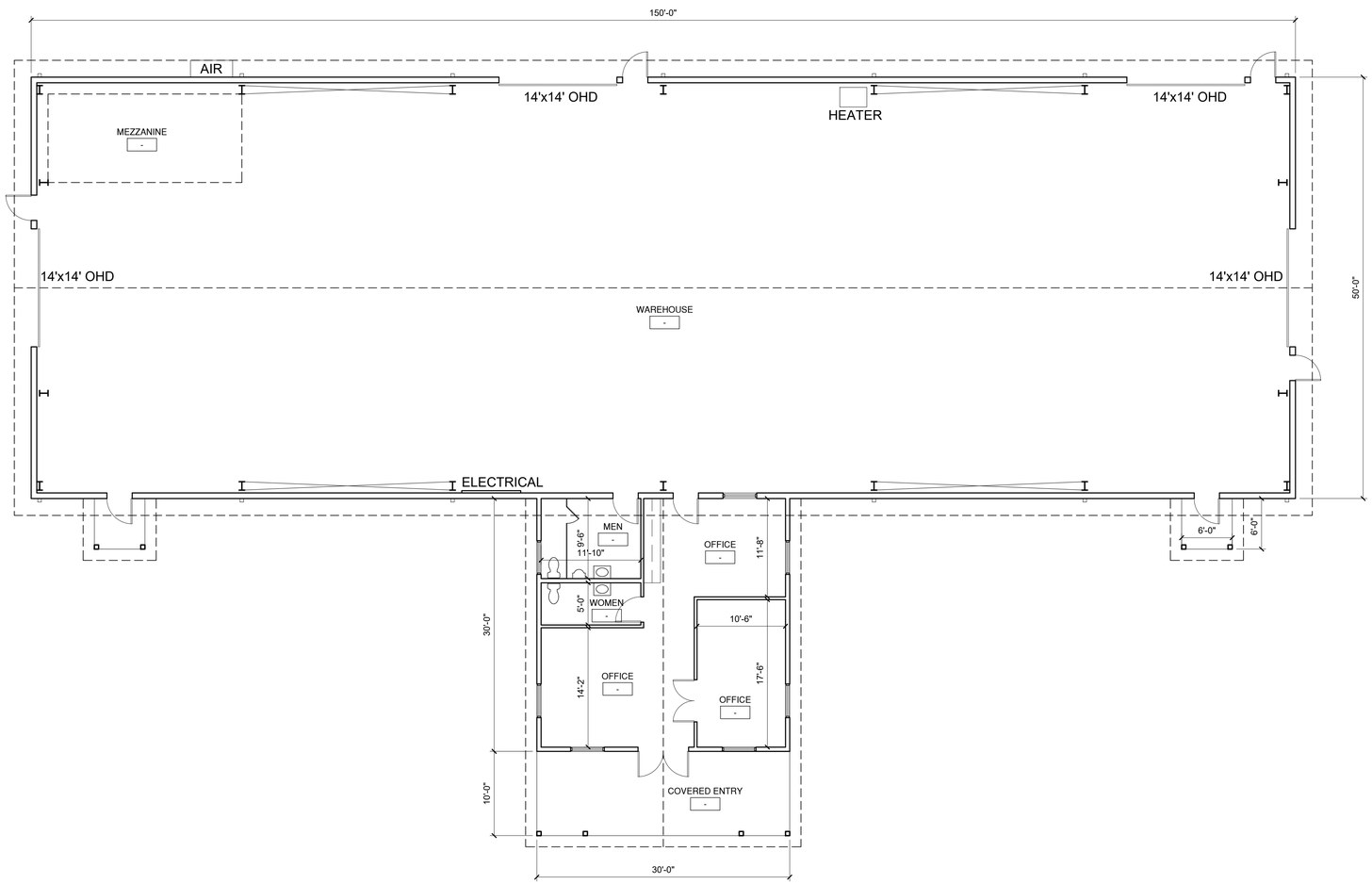

1
A200

FLOOR PLAN - AS-BUILT

SCALE: 1/8" = 1'-0"

0 4 8 16

PLOT DATE: 7/13/2025 12:18:16 PM

STROUD AND COMPANY
427 8th Street : Macon, Ga 31201
478-743-5097

ALL Architecture, LLC
2052 CHRYSLER DRIVE NE, ATLANTA, GA 30345
TELEPHONE: (404) 316-2896
E-MAIL: INFO@ALLARCHLLC.COM

REVISIONS	
NO.	DATE

COPYRIGHT
THIS DRAWING AND ALL REPRODUCTIONS ARE COPYRIGHTED AND THE PROPERTY OF ALL ARCHITECTURE, LLC AND MAY NOT BE USED IN ANY WAY WITHOUT THEIR PERMISSION.

PROJECT TITLE:
NATIONWIDE CONSTRUCTION GROUP - RENOVATION
201 GRISWOLDVILLE INDUSTRIAL BLVD
MACON, GEORGIA 31217

SEAL:
STATE OF GEORGIA
JUAN CAMILO ARCHILA
CERTIFICATE NO. 021113
REGISTERED ARCHITECT
7-11-25

DRAWN: JCA	CHECKED: JCA
APPROVED: JCA	ISSUE DATE: 07/11/25

CAD FILE NAME: 25022.dwg

SHEET TITLE:
AS-BUILT FLOOR PLAN

PROJECT NUMBER: 25022.1

SHEET NO:
A200

ISSUED FOR CONSTRUCTION

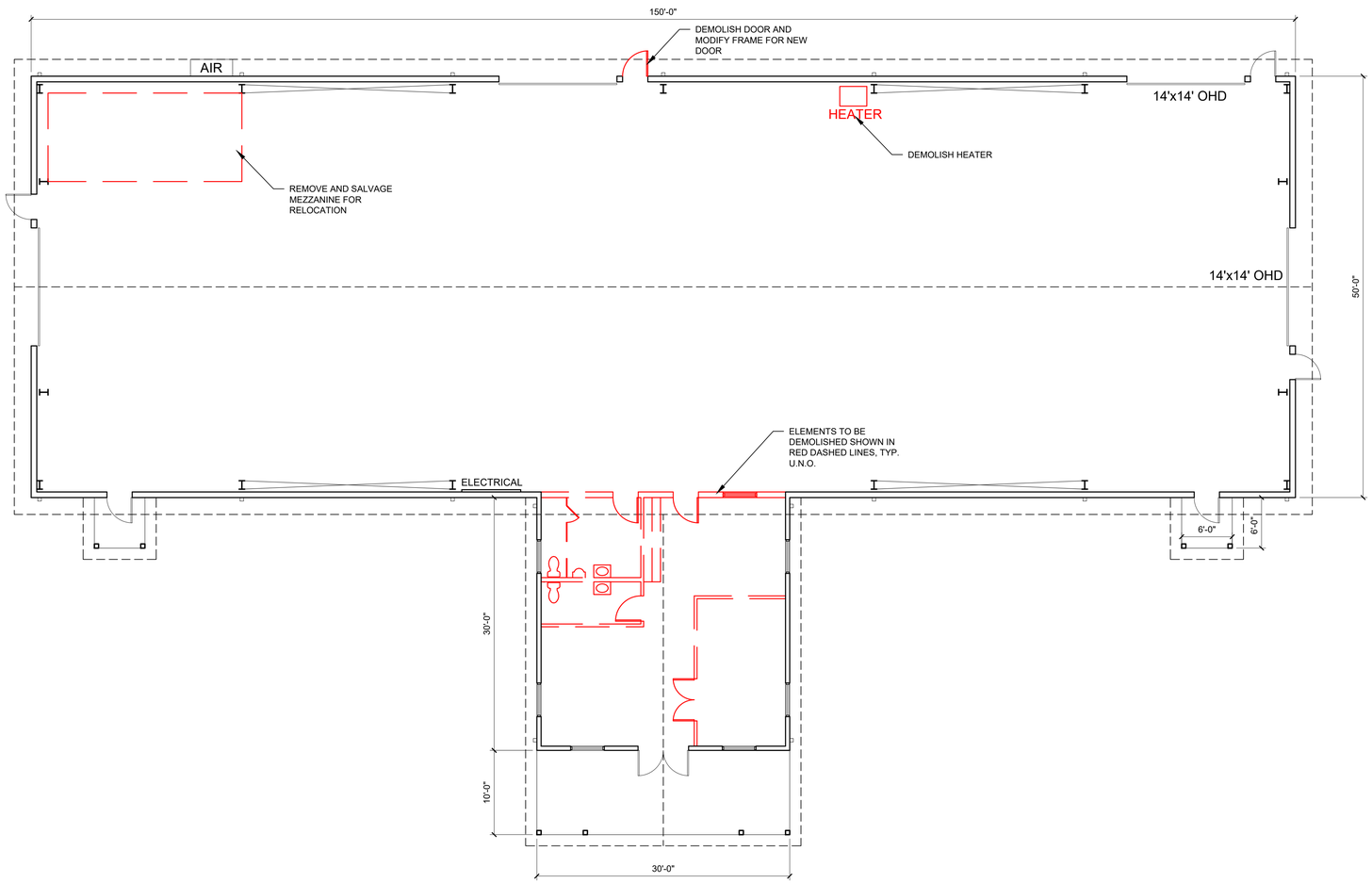

1 / A210 FLOOR PLAN - DEMOLITION

SCALE: 1/8" = 1'-0"

0 4 8 16

PLOT DATE: 7/13/2025 12:18:02 PM

STROUD AND COMPANY
427 8th Street : Macon, Ga 31201
478-743-5097

ALL Architecture, LLC
2052 CHRYSLER DRIVE NE, ATLANTA, GA 30345
TELEPHONE: (404) 316-2896
E-MAIL: INFO@ALLARCHLLC.COM

REVISIONS

NO.	DATE

COPYRIGHT
THIS DRAWING AND ALL REPRODUCTIONS ARE COPYRIGHTED AND THE PROPERTY OF ALL ARCHITECTURE, LLC AND MAY NOT BE REPRODUCED IN ANY WAY WITHOUT THEIR PERMISSION.

PROJECT TITLE:
NATIONWIDE CONSTRUCTION GROUP - RENOVATION
201 GRISWOLDVILLE INDUSTRIAL BLVD
MACON, GEORGIA 31217

SEAL:
STATE OF GEORGIA
JUAN CAMILO ARCHILA
CERTIFICATE NO. 021113
REGISTERED ARCHITECT
7-11-25

DRAWN:	CHECKED:
JCA	JCA
APPROVED:	ISSUE DATE:
JCA	07/11/25

CAD FILE NAME: 25022.dwg

SHEET TITLE: DEMOLITION FLOOR PLAN

PROJECT NUMBER: 25022.1

SHEET NO: A210

ISSUED FOR CONSTRUCTION

GWB FINISH NOTES

1. FINISH ALL INTERIOR WALLS IN HABITABLE SPACES, EXCLUDING STORAGE SPACES, TO A LEVEL 4 FINISH.
2. FINISH ALL CEILINGS TO A LEVEL 4 FINISH, IF SCHEDULED TO RECEIVE MATTE PAINT. VERIFY W/ FINISH SCHEDULE ON THIS SHEET.
3. FINISH ALL WALLS SCHEDULED TO RECEIVE TILE OR OTHER SECONDARY WALL COVERING, EXCLUDING WALLPAPER AND OTHER THIN SUBSTRATES, TO A LEVEL 2 FINISH.
4. FINISH ALL WALLS SCHEDULED TO RECEIVE WALLPAPER OR OTHER THIN SUBSTRATE TO A LEVEL 3 FINISH.
5. COORDINATE FINISH LEVEL W/ ANY SPECIFIED UL DETAILS THAT MAY REQUIRE SPECIFIC JOINT DETAILING AND FINISHING. FINISH WALLS TO UL SPECIFICATION OR THE SPECIFICATIONS OF THIS SCHEDULE, WHICHEVER IS HIGHER

FLOORING NOTES

1. ALL FLOOR COVERING MATERIALS TO BE INSTALLED PER MANUFACTURER'S STANDARD DETAILS AND SPECIFICATIONS. VERIFY W/ MANUFACTURER PRIOR TO INSTALLATION.
2. THE G.C. IS RESPONSIBLE FOR PROVIDING A SMOOTH LEVEL FLOOR SURFACE THAT MEETS THE MANUFACTURERS INSTALLATION SPECIFICATIONS PRIOR TO THE INSTALLATION OF ALL FLOORING MATERIALS. USE LEVELING COMPOUND UNDER TILE AND CARPET AREAS PER SPECIFICATIONS. PATCH/SHIM ALL AREAS AS NECESSARY SO THAT NEW FLOORING MEETS LEVEL WITH ALL OTHER FLOORING SURFACES MAX SLOPE OF 1:20.
3. THE FLOORING SUB-CONTRACTOR IS RESPONSIBLE FOR VERIFYING THAT THE CONDITION OF THE BASE FLOOR MEETS THE INSTALLATION SPECIFICATIONS PRIOR TO THE INSTALLATION OF THE NEW FLOORING MATERIAL.
4. ALL MATERIAL TRANSITIONS AT DOOR THRESHOLDS TO TAKE PLACE AT DOOR CENTERLINE U.O.N.
5. ALL DIMENSIONS ARE TO CENTERLINE OF TRANSITION BETWEEN FLOORING MATERIALS OR FINISH COLOR OF SAME MATERIAL. PLANS DO NOT SHOW ALL TILES OF SAME MATERIALS. CONTRACTOR TO START TILES AT POINT AS INDICATED ON PLANS.

FINISH SCHEDULE

ROOM NO.	BASE	FLOOR	WALL	CEILING
100	EXIST.	EXIST.	EXIST.	EXIST.
101	VB-1	CPT-1	PT-1	WD
102	VB-1	CPT-1	PT-1	WD
103	VB-1	CPT-1	PT-1	ACT
104	TB-1	FT-1	WT-1 / PT-1	ACT
105	VB-1	CPT-1	PT-1	ACT
106	TB-1	FT-1	WT-1 / PT-1	ACT
107	VB-1	LVT-1	PT-1	ACT
108	VB-1	LVT-1	PT-1	ACT
109	VB-1	CPT-1	PT-1	ACT
110	VB-1	LVT-1	PT-1	O.T.S.
111	VB-1	CPT-1	PT-1	ACT
112	VB-1	CPT-1	PT-1	ACT
113	VB-1	CPT-1	PT-1	ACT
114	VB-1	CPT-1	PT-1	ACT / GWB
115	VB-1	CPT-1	PT-1	ACT / GWB
116	VB-1	CPT-1	PT-1	ACT
117	VB-1	CPT-1	PT-1	ACT
118	VB-1	CPT-1	PT-1	ACT
119	VB-1	CPT-1	PT-1	ACT
120	VB-1	CPT-1	PT-1	ACT
121	TB-2	FT-2	WT-2 / PT-1	ACT
122	VB-1	LVT-1	PT-1	ACT
123	VB-1	SC	PT-1	O.T.S.
124	TB-1	FT-1	WT-1 / PT-1	ACT
C01	VB-1	LVT-1	PT-1	ACT / GWB
C02	VB-1	LVT-1	PT-1	ACT / GWB
C03	VB-1	LVT-1	PT-1	ACT / GWB
C04	VB-1	LVT-1	PT-1	ACT / GWB

FINISH LEGEND

BASE

- TB-1 CERAMIC TILE BASE TO MATCH FLOOR TILE FT-1
- TB-2 CERAMIC TILE BASE TO MATCH FLOOR TILE FT-2
- VB-1 TARKETT 4" HIGH VINYL COVE BASE, COLOR: TBD, CONTINUOUS ROLL

FLOOR

- CPT-1 COMMERCIAL CARPET TILE, TBD
- FT-1 RESTROOM FLOOR TILE, PORCELAIN, TBD
- FT-2 JANITOR CLOS. FLOOR TILE, PORCELAIN, TBD
- LVT-1 LUXURY VINYL TILE, TBD
- SC SEALED CONCRETE, EXISTING

WALL

- PT-1 PAINT ON GWB: SHERWIN WILLIAMS EMERALD LINE, INTERIOR ACRYLIC LATEX PAINT OR EQUAL, EGGSHELL FINISH
- WT-1 RESTROOM WALL TILE, PORCELAIN, TBD
  HEIGHT:
  AT WET WALLS: TO CEILING - SEE PLAN
  ALL OTHER WALLS: 4'-0" A.F.F. & PT-1 ABOVE
- WT-2 JANITOR CLOS. WALL TILE, PORCELAIN, TBD
  HEIGHT:
  4'-0" A.F.F. & PT-1 ABOVE

CEILING

- ACT 2x2 FLAT LAY-IN CEILING TILES ON 15/16" GRID
- GWB 5/8" LIGHTWEIGHT GYPSUM WALLBOARD CEILING, PAINTED FLAT WHITE
- O.T.S. OPEN TO STRUCTURE - EXISTING TO REMAIN
- WD EXISTING STAINED WOOD CEILING

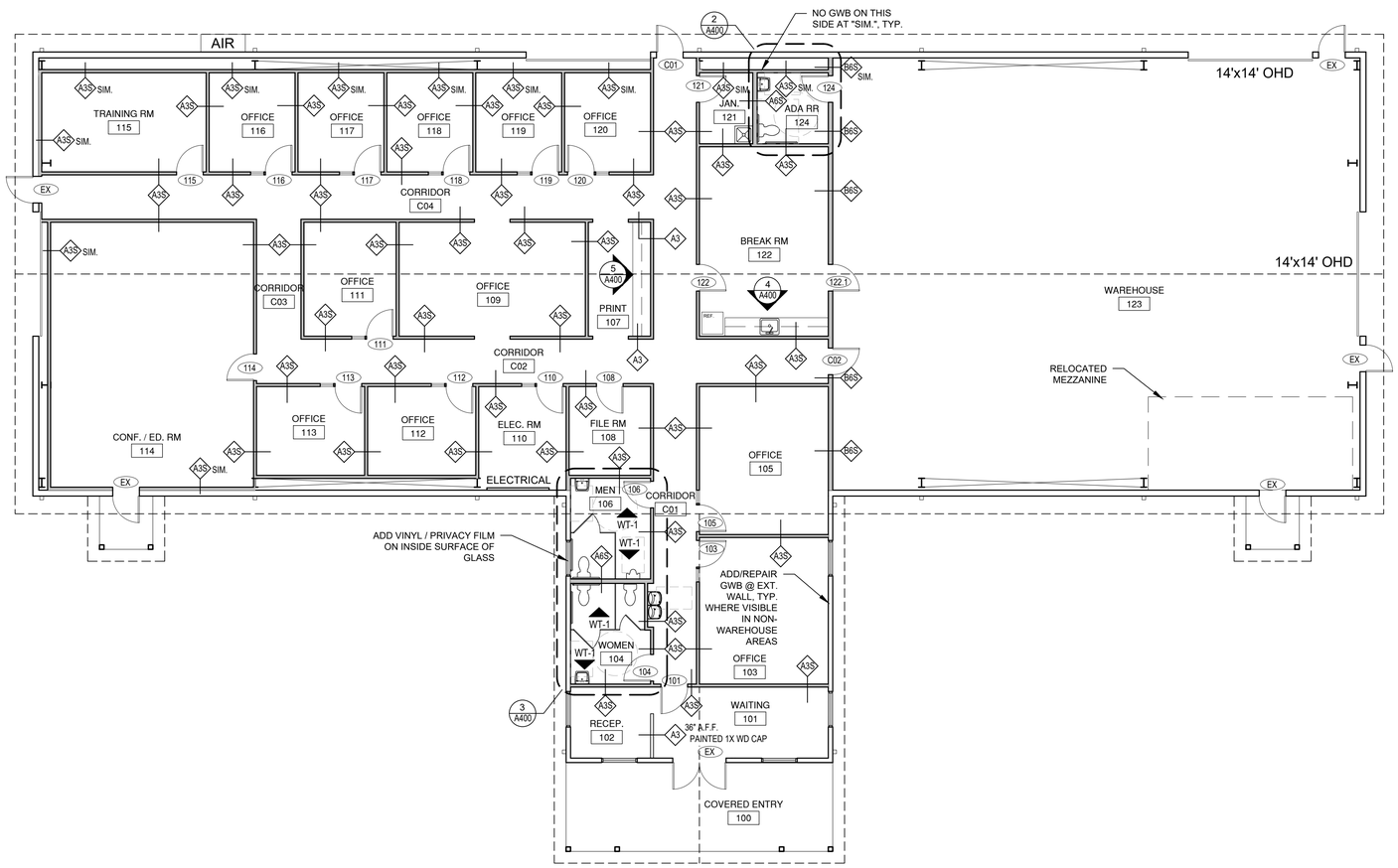

1 / A220 REFERENCE FLOOR PLAN

SCALE: 1/8" = 1'-0"

0 4 8 16

GENERAL FINISH NOTES

1. GENERAL CONTRACTOR SHALL BE RESPONSIBLE FOR PROPER PREPARATION OF ALL NEW AND EXISTING SURFACES IN A SATISFACTORY MANNER TO RECEIVE NEW FINISHES. THIS INCLUDES THE DEMOLITION AND REMOVAL OF NECESSARY ITEMS. TOUCH-UP AND/OR REFINISH OF SURFACES DAMAGED BY SUBSEQUENT WORK SHALL BE THE RESPONSIBILITY OF THE GENERAL CONTRACTOR. ALL WORK SHALL BE PERFORMED IN CONFORMANCE WITH THE MANUFACTURER'S RECOMMENDED INSTALLATION METHODS. THE GENERAL CONTRACTOR SHALL PREPARE THE EXISTING FLOOR PRIOR TO THE APPLICATION OF FINISH FLOORING. THE EXISTING CONCRETE SLAB MUST BE SMOOTH AND LEVEL TO WITHIN A TOLERANCE OF ONE-EIGHTH INCH PER FOOT. LATEX CEMENT PATCHING COMPOUND SHALL BE UTILIZED (NO ASPHALT BASED COMPOUNDS).
2. ALL SURFACES WHICH ARE TO RECEIVE A PAINT FINISH SHALL BE PRIMED AND FINISHED IN ACCORDANCE WITH THE WRITTEN SPECIFICATIONS.
3. ALL JOINTS IN GYPSUM BOARD WALLS SHALL BE FINISHED WITH PAPER TAPE 2" WIDE AND THREE COATS OF VINYL, DRY OR PREMIXED JOINT COMPOUND. ALL OUTSIDE CORNERS SHALL BE FINISHED WITH METAL CORNER BEADS, TAPED AND SPACKLED. ALL AREAS TO BE PAINTED SHALL BE SANDED SMOOTH. JUST PRIOR TO THE APPLICATION OF THE FIRST COAT OF PAINT, WIPE SANDED SURFACES WITH A DAMP CLOTH IN ORDER TO LAY FLAT ANY NAP WHICH MAY HAVE FORMED IN SANDING.
4. THE PAINT CONTRACTOR SHALL REMOVE ALL HARDWARE, SWITCH COVERS, ETC. PRIOR TO PAINTING AND BE RESPONSIBLE FOR THE REINSTALLATION AFTER PAINTING IS COMPLETED.
5. FINISH FLOORING INSTALLATION SHALL BE IN CONFORMANCE WITH THE MANUFACTURER'S RECOMMENDED INSTALLATION GUIDELINES. COORDINATE THE INSTALLATION WITH OTHER TRADES, SUCH AS ELECTRICAL.
6. ALL JOINTS BETWEEN MATERIALS TO BE TIGHT AND CONSTRUCTED IN A NEAT WORKMANLIKE MANNER
7. ALL FINISHES SHALL BE TOUCHED UP TO CORRECT ANY IMPERFECTIONS AFTER INSTALLATION. FIXTURE CONTRACTOR SHALL PROVIDE TO THE GENERAL CONTRACTOR ALL MATERIALS FOR TOUCH UP WORK.
8. THE INTENT OF THE FINISH SPECIFICATION IS TO PROVIDE A SATISFACTORY FINISH TO ALL PARTS OF THE WORK. COVER ALL SURFACES THOROUGHLY. IF THE SPECIFIED NUMBER OF COATS DOES NOT ACCOMPLISH THE INTENT, THE GENERAL CONTRACTOR SHALL BE RESPONSIBLE FOR THE APPLICATION OF ADDITIONAL COATS OF THE SPECIFIED MATERIAL TO GIVE SATISFACTORY COVERAGE, AT NO ADDITIONAL COST TO OWNER.
9. CLEAN ALL GLASS SURFACES WITH LIQUID GLASS CLEANER AT PROJECT COMPLETION.
10. PAINT ALL DOORS AND JAMBS, SEMI GLOSS IN COLOR TO MATCH ADJACENT FINISH, WHERE OCCURS, UNLESS NOTED OTHERWISE.
11. FLAT PAINT FINISH TO BE USED ON CEILINGS U.N.O.
12. EGGSHELL PAINT FINISH TO BE USED ON ALL WALLS U.N.O.
13. SEMI-GLOSS PAINT FINISH TO BE USED ON ALL DOORS AND DOOR FRAMES U.N.O.
14. FIXTURE FABRICATOR AND G.C. TO FOLLOW ALL MANUFACTURER'S RECOMMENDED INSTALLATION AND MAINTENANCE PROCEDURES.

STROUD AND COMPANY
427 8th Street : Macon, Ga 31201
478-743-5097

ALL Architecture, LLC
2052 CHRYSLER DRIVE NE, ATLANTA, GA 30345
TELEPHONE: (404) 316-2896
E-MAIL: INFO@ALLARCHLLC.COM

REVISIONS	
NO.	DATE

COPYRIGHT
THIS DRAWING AND ALL REPRODUCTIONS ARE COPYRIGHTED AND THE PROPERTY OF ALL ARCHITECTURE, LLC AND MAY NOT BE REPRODUCED WITHOUT THEIR PERMISSION.

PROJECT TITLE:
NATIONWIDE CONSTRUCTION GROUP - RENOVATION
201 GRISWOLDVILLE INDUSTRIAL BLVD
MACON, GEORGIA 31217

SEAL:
STATE OF GEORGIA
JUAN CAMILO ARCHILA
CERTIFICATE NO. 12113
REGISTERED ARCHITECT
7-11-25

DRAWN: JCA	CHECKED: JCA
APPROVED: JCA	ISSUE DATE: 07/11/25

CAD FILE NAME: 25022.dwg

SHEET TITLE: REFERENCE FLOOR PLAN

PROJECT NUMBER: 25022.1

SHEET NO: A220

ISSUED FOR CONSTRUCTION

PLOT DATE: 7/13/2025 12:17:30 PM

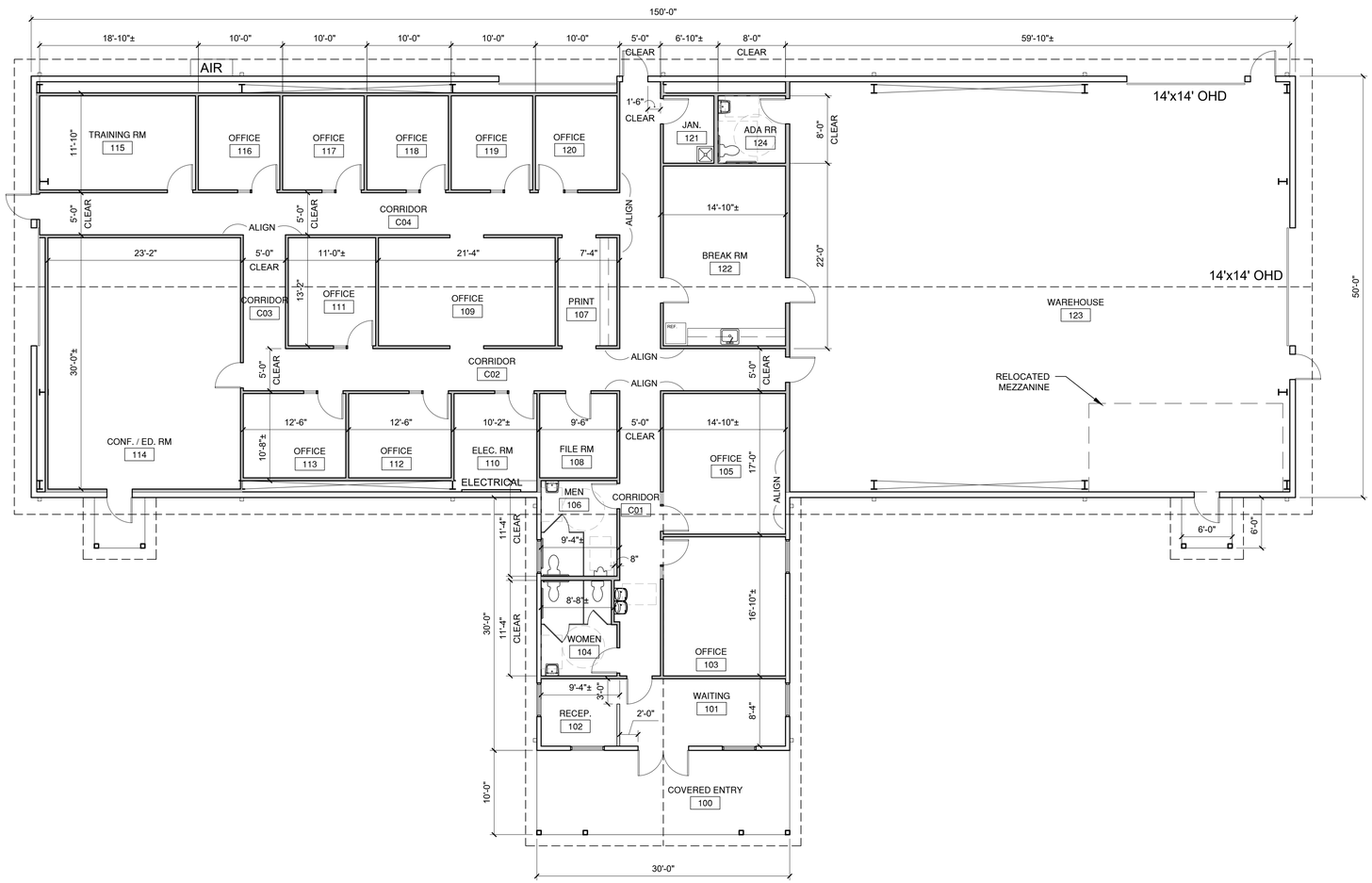

1 A221 DIMENSION FLOOR PLAN

SCALE: 1/8" = 1'-0"

0 4 8 16

DIMENSION NOTES

1. GENERALLY PLAN DIMENSIONS ARE FROM FACE OF STUD WALLS EXCEPT AT CORRIDORS & CRITICAL CLEAR DIMENSIONS WHERE DIMENSION IS FROM FACE OF FINISHED GYPSUM BOARD ON SIDE WHERE CLEAR DIMENSION MUST BE HELD.
2. ALL INTERIOR FRAME WALLS ARE 3-⅝" METAL STUD U.N.O. - SEE PARTITION TYPES
3. WINDOW & DOOR OPENINGS ARE GENERALLY DIMENSIONED TO THE EDGE OF ROUGH OPENINGS FOR EXTERIOR CMU WALLS & TO CENTERLINE OF INTERIOR OPENINGS.
4. EDGE OF DOOR IS LOCATED 4" OFF OF ADJACENT WALL EXCLUSIVE OF FRAME U.N.O. ALL OTHER DOOR OPENINGS ARE LOCATED TO ONE SIDE OF ROUGH OPENING, FRAME EXCLUSIVE.
5. DO NOT SCALE DRAWINGS.

STROUD AND COMPANY
427 8th Street : Macon, Ga 31201
478-743-5097

ALL Architecture, LLC
2052 CHRYSLER DRIVE NE, ATLANTA, GA 30345
TELEPHONE: (404) 316-2896
E-MAIL: INFO@ALLARCHLLC.COM

REVISIONS	
NO.	DATE

COPYRIGHT
THIS DRAWING AND ALL REPRODUCTIONS ARE COPYRIGHTED AND THE PROPERTY OF ALL ARCHITECTURE, LLC AND MAY NOT BE REPRODUCED IN ANY WAY WITHOUT THEIR PERMISSION.

PROJECT TITLE:
NATIONWIDE CONSTRUCTION GROUP - RENOVATION
201 GRISWOLDVILLE INDUSTRIAL BLVD
MACON, GEORGIA 31217

SEAL:
STATE OF GEORGIA
JUAN CAMILO ARCHILA
CERTIFICATE NO. 12113
REGISTERED ARCHITECT
7-11-25

DRAWN: JCA	CHECKED: JCA
APPROVED: JCA	ISSUE DATE: 07/11/25

CAD FILE NAME: 25022.dwg

SHEET TITLE: DIMENSION FLOOR PLAN

PROJECT NUMBER: 25022.1

SHEET NO: A221

ISSUED FOR CONSTRUCTION

PLOT DATE: 7/13/2025 12:17:13 PM

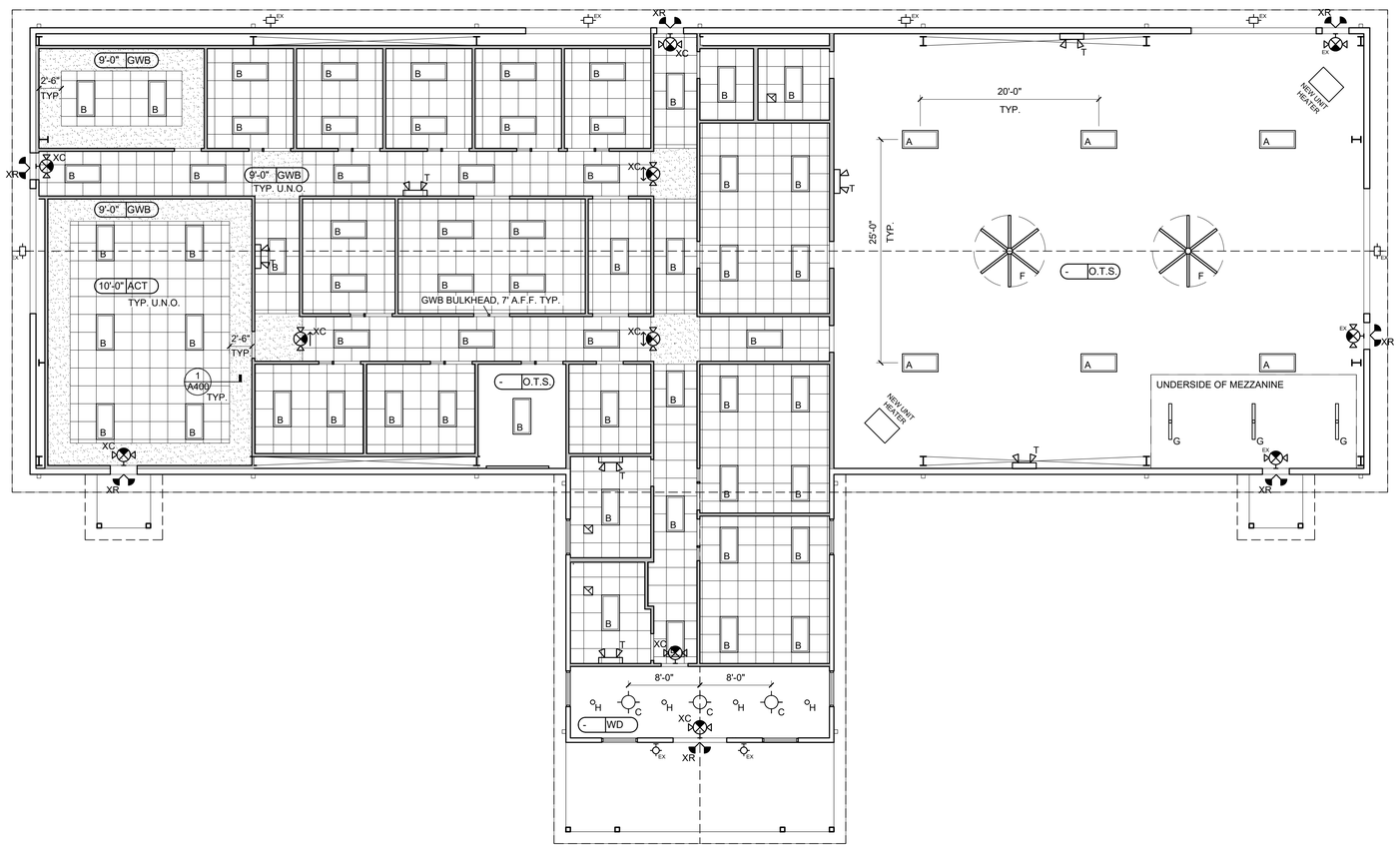

1 A320 REFLECTED CEILING PLAN

SCALE: 1/8" = 1'-0"

0 4 8 16

REFL. CEILING PLAN LEGEND

ALL ELEMENTS ARE NEW UNLESS NOTED OTHERWISE
EX = EXISTING, R = RELOCATED

CEILING

X'-X" XXX **CEILING TAG**
- MATERIAL
- HEIGHT A.F.F.

ACT	2'x2' ACOUSTICAL CEILING TILE ARMSTRONG CORTEGA 2195 W/ SUPRAFINE $\frac{15}{16}$" GRID
O.T.S.	OPEN TO STRUCTURE
WD	VAULTED WOOD CEILING TO MATCH EXTERIOR

ELECTRICAL, SEE ELEC. DWGS. FOR LIGHTING FIXTURE SCHEDULE

- A — HIGH-BAY FIXTURE IN OPEN CEILING
- B — 2X4 LED LAY-IN TROFFER
- C — LED PENDANT FIXTURE IN VAULTED CEILING
- D — LED WALLPACK FIXTURE
- F — HVLS FAN - 8' DIAMETER
- G — 4' LED STRIP FIXTURE
- H — 6" RECESSED DOWNLIGHT
- T — EMERGENCY LIGHTING UNIT
- XC — COMBO EXIT SIGN CEILING-MOUNTED; LIT CHEVRON IN DIRECTION OF EGRESS TRAVEL
- XC — COMBO EXIT SIGN WALL-MOUNTED
- XR — REMOTE LAMP HEAD

MECHANICAL, SEE MECH. DWGS. FOR ADDITIONAL INFORMATION

- BATHROOM EXHAUST FAN

DUCTWORK, DIFFUSERS AND GRILLES NOT SHOWN - SEE MECH DWGS.

STROUD AND COMPANY
427 8th Street : Macon, Ga 31201
478-743-5097

ALL Architecture, LLC
2052 CHRYSLER DRIVE NE, ATLANTA, GA 30345
TELEPHONE: (404) 316-2896
E-MAIL: INFO@ALLARCHLLC.COM

REVISIONS	
NO.	DATE

COPYRIGHT
THIS DRAWING AND ALL REPRODUCTIONS ARE COPYRIGHTED AND THE PROPERTY OF ALL ARCHITECTURE, LLC AND MAY NOT BE REPRODUCED IN ANY WAY WITHOUT THEIR PERMISSION.

PROJECT TITLE:
NATIONWIDE CONSTRUCTION GROUP - RENOVATION
201 GRISWOLDVILLE INDUSTRIAL BLVD
MACON, GEORGIA 31217

SEAL:
STATE OF GEORGIA
JUAN CAMILO ARCHILA
CERTIFICATE NO. 17113
REGISTERED ARCHITECT
7-11-25

DRAWN: JCA	CHECKED: JCA
APPROVED: JCA	ISSUE DATE: 07/11/25

CAD FILE NAME: 25022.dwg

SHEET TITLE: REFLECTED CEILING PLAN

PROJECT NUMBER: 25022.1

SHEET NO: A320

ISSUED FOR CONSTRUCTION

PLOT DATE: 7/13/2025 12:16:52 PM

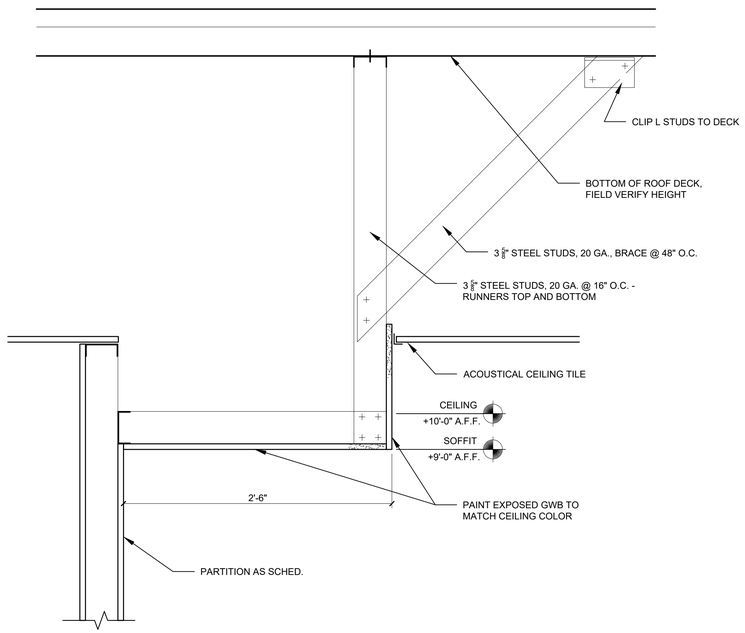

1 A400 SECTION DETAIL - GWB CEILING BORDER

SCALE: 1 1/2" = 1'-0"

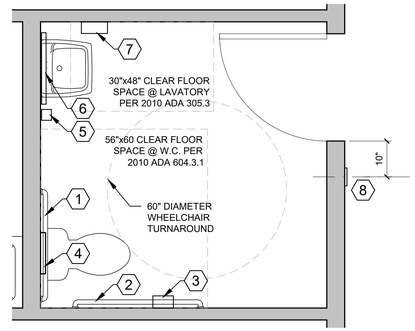

2 A400 ENLARGED TOILET PLAN

SCALE: 1/2" = 1'-0"

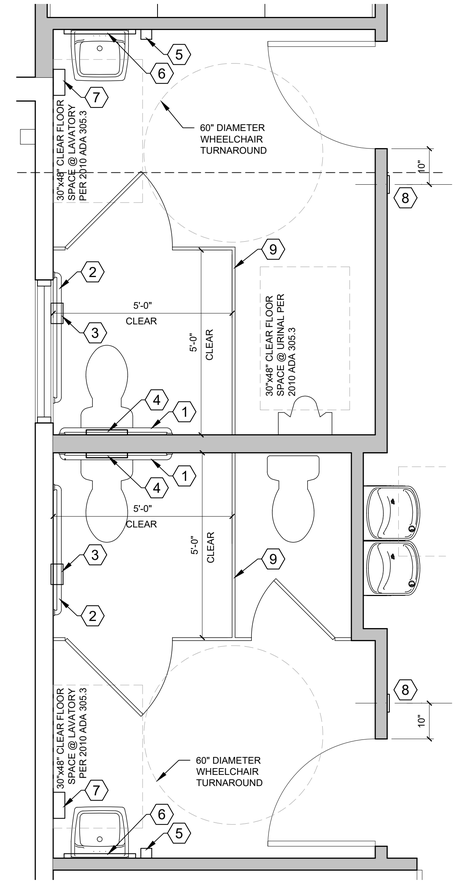

3 A400 ENLARGED TOILET PLAN

SCALE: 1/2" = 1'-0"

TOILET ACCESSORY LEGEND

1. 36" GRAB BAR, 1½" DIA. - BOBRICK B-6806 OR EQUAL
2. 42" GRAB BAR, 1½" DIA. - BOBRICK B-6806 OR EQUAL
3. TOILET PAPER DISPENSER - BOBRICK B-6857 OR EQUAL
4. TOILET SEAT COVER DISPENSER - TOUGH GUY 2VEX8 OR EQ.
5. TOUCHLESS SOAP DISPENSER - ULINE H-7174 OR EQUAL
6. 24" X 30" MIRROR - BOBRICK B-165 2430
7. PAPER TOWEL DISPENSER - GEORGIA PACIFIC 59462A
8. RAISED BRAILLE AND PICTORIAL SYMBOL RESTROOM SIGN PER ADAAG 2010 703.4.1, "MEN" OR "WOMEN" AT LOCATIONS SHOWN ON PLAN. MOUNT TOP OF SIGN AT 60" A.F.F.

   MEN: ULINE S-15597BL OR EQUAL
   WOMEN: ULINE S-15598BL OR EQUAL
   UNISEX: S-15599BL OR EQUAL
9. TOILET PARTITIONS - HADRIAN - STANDARD SOLID PLASTIC. COLOR: BLACK. PROVIDE CONTINUOUS LENGTH U-CHANNELS, TYP. - ALL DOORS SHALL HAVE 3 HINGES

NOTES:
1. FLUSH CONTROLS SHALL NOT REQUIRE TIGHT GRASPING, PINCHING OR TWISTING OF THE WRIST. CONTROLS FOR FLUSH VALVES SHALL BE MOUNTED ON THE WIDE SIDE OF THE TOILET AREAS
2. REFER TO SHEET A020 FOR TYPICAL MOUNTING HEIGHTS
3. PROVIDE BLOCKING IN WALLS FOR GRAB BARS, & ACCESSORIES, TYP.

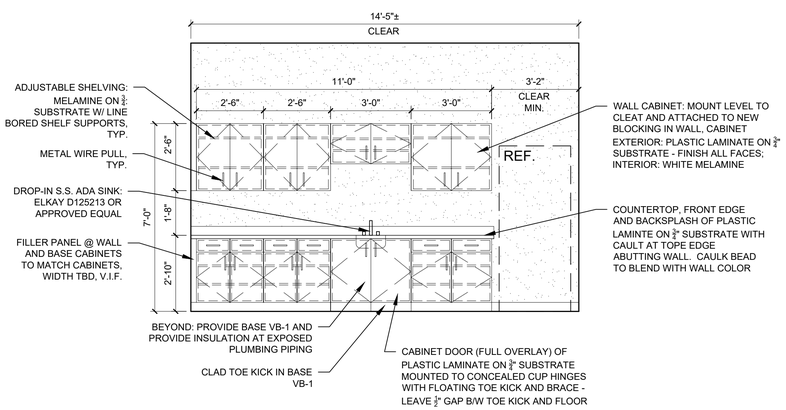

4 A400 INTERIOR ELEVATION - BREAK ROOM

SCALE: 3/8" = 1'-0"

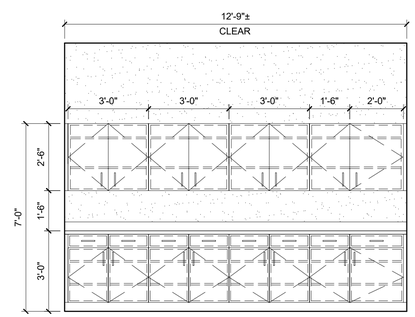

SEE TYPICAL CABINET NOTES ON ELEVATION 4/A400

5 A400 INTERIOR ELEVATION - BREAK ROOM

SCALE: 3/8" = 1'-0"

STROUD AND COMPANY
427 8th Street : Macon, Ga 31201
478-743-5097

ALL Architecture, LLC
2052 CHRYSLER DRIVE NE, ATLANTA, GA 30345
TELEPHONE: (404) 316-2896
E-MAIL: INFO@ALLARCHLLC.COM

REVISIONS	
NO.	DATE

COPYRIGHT
THIS DRAWING AND ALL REPRODUCTIONS ARE COPYRIGHTED AND THE PROPERTY OF ALL ARCHITECTURE, LLC AND MAY NOT BE REPRODUCED IN ANY WAY WITHOUT THEIR PERMISSION.

PROJECT TITLE:
NATIONWIDE CONSTRUCTION GROUP - RENOVATION
201 GRISWOLDVILLE INDUSTRIAL BLVD
MACON, GEORGIA 31217

SEAL:
STATE OF GEORGIA
JUAN CAMILO ARCHILA
CERTIFICATE NO. 12413
REGISTERED ARCHITECT
7-11-25

DRAWN: JCA	CHECKED: JCA
APPROVED: JCA	ISSUE DATE: 07/11/25

CAD FILE NAME: 25022.dwg

SHEET TITLE: INTERIOR DETAILS

PROJECT NUMBER: 25022.1

SHEET NO: A400

ISSUED FOR CONSTRUCTION

PLOT DATE: 7/13/2025 12:16:02 PM

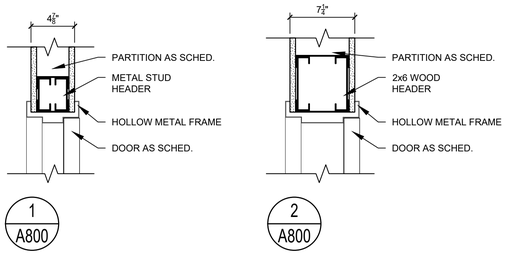

HEAD DETAILS

SCALE: 1 $\frac{1}{2}$" = 1'-0"

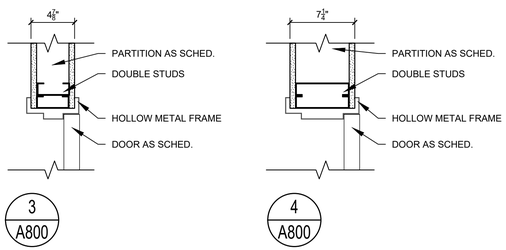

JAMB DETAILS

SCALE: 1 $\frac{1}{2}$" = 1'-0"

DOOR SCHEDULE

	DOOR								FRAME ASSEMBLY									
					SIZE							DETAILS						
DOOR NUMBER	DOOR TYPE	DOOR MATERIAL	DOOR FINISH	INTERIOR / EXTERIOR	WIDTH	HEIGHT	THICKNESS	GLASS THICKNESS	FRAME TYPE	FRAME MATERIAL	FRAME FINISH	HEAD	JAMB	SILL	RATING	HW SET	DOOR NUMBER	REMARKS
101	D1	SCWD	STD	INT	3'-0"	7'-0"	1¾"	—	F1	HM	PTD	1/A800	3/A800		—	R01	101	
103	D1	SCWD	STD	INT	3'-0"	7'-0"	1¾"	—	F2	HM	PTD	1/A800	3/A800		—	L01	103	
104	D1	SCWD	STD	INT	3'-0"	7'-0"	1¾"	—	F1	HM	PTD	1/A800	3/A800		—	R01	104	
105	D1	SCWD	STD	INT	3'-0"	7'-0"	1¾"	—	F2	HM	PTD	1/A800	3/A800		—	L01	105	
106	D1	SCWD	STD	INT	3'-0"	7'-0"	1¾"	—	F1	HM	PTD	1/A800	3/A800		—	R01	106	
108	D1	SCWD	STD	INT	3'-0"	7'-0"	1¾"	—	F1	HM	PTD	1/A800	3/A800		—	P25	108	
110	D1	SCWD	STD	INT	3'-0"	7'-0"	1¾"	—	F2	HM	PTD	1/A800	3/A800		—	P25	110	
111	D1	SCWD	STD	INT	3'-0"	7'-0"	1¾"	—	F2	HM	PTD	1/A800	3/A800		—	L01	111	
112	D1	SCWD	STD	INT	3'-0"	7'-0"	1¾"	—	F2	HM	PTD	1/A800	3/A800		—	L01	112	
113	D1	SCWD	STD	INT	3'-0"	7'-0"	1¾"	—	F2	HM	PTD	1/A800	3/A800		—	L01	113	
114	D1	SCWD	STD	INT	3'-0"	7'-0"	1¾"	—	F1	HM	PTD	1/A800	3/A800		—	R01	114	
115	D1	SCWD	STD	INT	3'-0"	7'-0"	1¾"	—	F1	HM	PTD	1/A800	3/A800		—	R01	115	
116	D1	SCWD	STD	INT	3'-0"	7'-0"	1¾"	—	F2	HM	PTD	1/A800	3/A800		—	L01	116	
117	D1	SCWD	STD	INT	3'-0"	7'-0"	1¾"	—	F2	HM	PTD	1/A800	3/A800		—	L01	117	
118	D1	SCWD	STD	INT	3'-0"	7'-0"	1¾"	—	F2	HM	PTD	1/A800	3/A800		—	L01	118	
119	D1	SCWD	STD	INT	3'-0"	7'-0"	1¾"	—	F2	HM	PTD	1/A800	3/A800		—	L01	119	
120	D1	SCWD	STD	INT	3'-0"	7'-0"	1¾"	—	F2	HM	PTD	1/A800	3/A800		—	L01	120	
121	D2	SCWD	STD	INT	3'-0"	7'-0"	1¾"	—	F1	HM	PTD	1/A800	3/A800		—	P25	121	
122	D1	SCWD	STD	INT	3'-0"	7'-0"	1¾"	—	F1	HM	PTD	2/A800	4/A800		—	R01	122	
122.1	D1	SCWD	STD	INT	3'-0"	7'-0"	1¾"	—	F1	HM	PTD	1/A800	3/A800		—	R01	122.1	
124	D1	SCWD	STD	INT	3'-0"	7'-0"	1¾"	—	F1	HM	PTD	2/A800	4/A800		—	P01	124	
C01	D1	HM	PTD	EXT	3'-0"	7'-0"	1¾"	—	F1	HM	PTD	1/A800	3/A800		—	—	C01	HARDWARE TO MATCH EXISTING EXT. DOORS
C02	D1	SCWD	STD	INT	3'-0"	7'-0"	1¾"	—	F1	HM	PTD	2/A800	4/A800		—	R01	C02	
EX	EXISTING TO REMAIN																EX	

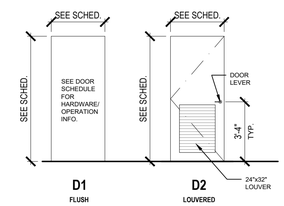

DOOR TYPES

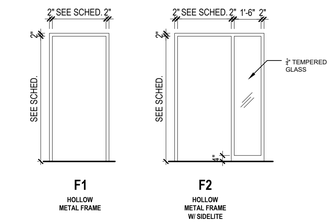

FRAME TYPES

HARDWARE SETS

HARDWARE GROUP NO. L01

FOR USE ON DOOR #(S):

103 105 111 112 113 116 117 118 119 120

PROVIDE EACH SGL DOOR(S) WITH THE FOLLOWING:

QTY	DESCRIPTION	CATALOG NUMBER	FINISH	MFR
3 EA	HINGE	5BB1 4.5 X 4.5	630	IVE
1 EA	ENTRANCE/OFFICE LOCK	ALX50P6 SPA	626	SCH
1 EA	WALL STOP	WS406/407CVX	630	IVE
3 EA	SILENCER	SR64	GRY	IVE

HARDWARE GROUP NO. P01 - PRIVACY W/ INDICATOR

FOR USE ON DOOR #(S):

124

PROVIDE EACH SGL DOOR(S) WITH THE FOLLOWING:

QTY	DESCRIPTION	CATALOG NUMBER	FINISH	MFR
3 EA	HINGE	5BB1	652	IVE
1 EA	PRIVACY SET W/ INDICATOR	L9440 06A 09-544 L283-722	630	SCH
1 EA	SURFACE CLOSER	1460 REG	689	LCN
1 EA	WALL STOP	WS406/407CCV	630	IVE
1 EA	SET DOOR SEALS	188S-BK PSA	BK	ZER
1 EA	DOOR BOTTOM	369AA	AA	ZER
1 EA	COAT AND HAT HOOK	582	626	IVE

HARDWARE GROUP NO. P25

FOR USE ON DOOR #(S):

108 110 121

PROVIDE EACH SGL DOOR(S) WITH THE FOLLOWING:

QTY	DESCRIPTION	CATALOG NUMBER	FINISH	MFR
3 EA	HINGE	5BB1	652	IVE
1 EA	STOREROOM LOCK	ALX80P6 SPA	626	SCH
1EA	KICK PLATE	8400 10" B-CS	630	IVE
1 EA	WALL STOP	WS406/407CCV	630	IVE
3 EA	SILENCER	SR64	GRY	IVE

HARDWARE GROUP NO. R01

FOR USE ON DOOR #(S):

101 104 106 114 115 122 122.1 C02

PROVIDE EACH SGL DOOR(S) WITH THE FOLLOWING:

QTY	DESCRIPTION	CATALOG NUMBER	FINISH	MFR
3 EA	HINGE	5BB1	652	IVE
1 EA	PASSAGE SET	ALX10 SPA	626	SCH
1 EA	SURFACE CLOSER	1460 REG	689	LCN
1 EA	MOP PLATE	8400 8" X 1" LDW B-CS	630	IVE
1 EA	KICK PLATE	8400 8" X 2" LDW B-CS	630	IVE
1 EA	SET DOOR SEALS	188SBK PSA	BK	ZER
1 EA	DOOR BOTTOM	369AA	AA	ZER

ABBREVIATION	NAME
ADA	ADAMS RITE MANUFACTURING CO
ADS	AD SYSTEMS
IVE	H.B. IVES
LCN	LCN COMMERCIAL DIVISION
PEM	PEMKO
ROC	ROCKWOOD
SCE	SCHLAGE ELECTRONIC SECURITY
SCH	SCHLAGE LOCK COMPANY
VON	VON DUPRIN
ZER	ZERO INTERNATIONAL INC

STROUD AND COMPANY
427 8th Street : Macon, Ga 31201
478-743-5097

ALL Architecture, LLC
2052 CHRYSLER DRIVE NE, ATLANTA, GA 30345
TELEPHONE: (404) 316-2896
E-MAIL: INFO@ALLARCHLLC.COM

REVISIONS

NO.	DATE

COPYRIGHT
THIS DRAWING AND ALL REPRODUCTIONS ARE COPYRIGHTED AND THE PROPERTY OF ALL ARCHITECTURE, LLC AND MAY NOT BE REPRODUCED OR DISPLAYED WITHOUT THEIR PERMISSION.

PROJECT TITLE:
NATIONWIDE CONSTRUCTION GROUP - RENOVATION
201 GRISWOLDVILLE INDUSTRIAL BLVD
MACON, GEORGIA 31217

SEAL:

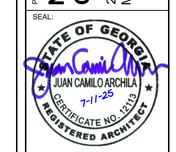

DRAWN:	CHECKED:
JCA	JCA
APPROVED: JCA	ISSUE DATE: 07/11/25

CAD FILE NAME: 25022.dwg

SHEET TITLE: DOOR SCHEDULE & DETAILS

PROJECT NUMBER: 25022.1

SHEET NO.: A800

ISSUED FOR CONSTRUCTION

PLOT DATE: 7/13/2025 12:15:10 PM

SPECIFICATIONS

DIRECT DRIVE SIDEWALL PROPELLER FANS:

THE PROPELLER SHALL BE FABRICATED STEEL BLADES AND HUBS. THE WHEEL SHALL BE SECURELY ATTACHED TO THE FAN SHAFT WITH STANDARD SQUARE KEY AND SET SCREW OR TAPERED BUSHING. THE WHEEL SHALL BE STATICALLY AND DYNAMICALLY BALANCED IN ACCORDANCE WITH AMCA STANDARD 204-05. THE PROPELLER AND FAN INLET SHALL BE MATCHED.

THE MOTOR ENCLOSURE SHALL BE OPEN DRIPROOF. THE MOTOR SHALL BE PERMANENTLY LUBRICATED, HEAVY DUTY BALL BEARING TYPE. THE MOTOR SHALL BE FURNISHED AT THE SPECIFIC VOLTAGE AND PHASE. REFER TO THE ELECTRICAL DOCUMENTS FOR REQUIRED FAN ELECTRICAL CHARACTERISTICS.

THE FRAMES AND PANELS SHALL BE BOLTED CONSTRUCTION. THE DRIVE FRAME ASSEMBLIES AND FAN PANELS SHALL BE GALVANIZED STEEL. THE DRIVE FRAME SHALL HAVE WELDED WIRE OR FORMED CHANNELS. THE FAN PANELS SHALL HAVE PREPUNCHED MOUNTING HOLES, FORMED FLANGES AND A DEEP FORMED ONE PIECE INLET VENTURI.

REFER TO THE EQUIPMENT SCHEDULE FOR A FULL LISTING OF REQUIRED FAN ACCESSORIES.

CEILING FAN:

CEILING MOUNTED EXHAUST FANS SHALL BE OF THE CENTRIFUGAL DIRECT DRIVE TYPE. THE FAN HOUSING SHALL BE CONSTRUCTED OF STEEL. THE PLASTIC DUCT COLLAR SHALL BE A TAPERED SLEEVE FOR EASE OF CONNECTION TO 3 IN AND 4 IN ROUND DUCTWORK AND SHALL INCLUDE A BACKDRAFT DAMPER. THE GRILLE SHALL BE CONSTRUCTED OF NON-YELLOWING HIGH STRENGTH POLYMER AND ATTACHED TO THE HOUSING WITH TORSION SPRINGS. THE WHEELS SHALL BE CONSTRUCTED OF HIGH STRENGTH POLYMER. THE ACCESS FOR WIRING SHALL BE EXTERNAL. THE MOTOR DISCONNECT SHALL BE INTERNAL AND OF THE PLUG IN TYPE.

ALL FANS SHALL BEAR THE AMCA CERTIFIED RATINGS SEALS FOR SOUND AND AIR PERFORMANCE AND SHALL BE U.L. LISTED.

WALL LOUVERS:

THE WALL LOUVER SHALL BE AMCA CERTIFIED. THE WALL LOUVER SHALL BE A STATIONARY, DRAINABLE BLADE TYPE. THE LOUVER SHALL INCORPORATE DRAIN GUTTERS IN THE HEAD MEMBER AND HORIZONTAL BLADES TO CHANNEL WATER TO THE JAMBS WHERE WATER IS FURTHER CHANNELED THROUGH VERTICAL DOWNSPOUTS AND OUT A SLOPED SILL.

THE FRAME AND BLADES SHALL BE CONSTRUCTED FROM HEAVY GAUGE, EXTRUDED, ALUMINUM. THE LOUVER SHALL BE OF MECHANICALLY FASTENED CONSTRUCTION.

REFER TO THE EQUIPMENT SCHEDULE FOR A FULL LISTING OF REQUIRED LOUVER ACCESSORIES.

HEAT PUMP:

EQUIPMENT: FACTORY ASSEMBLED, SINGLE PIECE, AIR-COOLED HEAT PUMP UNIT. CONTAINED WITHIN THE UNIT ENCLOSURE IS ALL FACTORY WIRING, PIPING, CONTROLS, COMPRESSOR, REFRIGERANT CHARGE, AND SPECIAL FEATURES REQUIRED PRIOR TO FIELD START-UP.

UNIT CABINET WILL BE CONSTRUCTED OF GALVANIZED STEEL, BONDERIZED, AND COATED WITH A POWDER COAT PAINT.

CONDENSER FAN WILL BE DIRECT-DRIVE PROPELLER TYPE, DISCHARGING AIR UPWARD. CONDENSER FAN MOTORS WILL BE TOTALLY ENCLOSED, 1-PHASE TYPE WITH CLASS B INSULATION AND PERMANENTLY LUBRICATED BEARINGS. SHAFTS WILL BE CORROSION RESISTANT. FAN BLADES WILL BE STATICALLY AND DYNAMICALLY BALANCED. CONDENSER FAN OPENINGS WILL BE EQUIPPED WITH STEEL WIRE SAFETY GUARDS.

COMPRESSOR WILL BE HERMETICALLY SEALED. COMPRESSOR WILL BE MOUNTED ON RUBBER VIBRATION ISOLATORS.

CONDENSER COIL WILL BE AIR COOLED. COIL WILL BE CONSTRUCTED OF ALUMINUM FINS MECHANICALLY BONDED TO COPPER TUBES WHICH ARE THEN CLEANED, DEHYDRATED, AND SEALED.

REFRIGERATION CIRCUIT COMPONENTS WILL INCLUDE LIQUID-LINE SHUTOFF VALVE WITH SWEAT CONNECTIONS, VAPOR-LINE SHUTOFF VALVE WITH SWEAT CONNECTIONS, SYSTEM REFRIGERANT CHARGE, POE COMPRESSOR OIL, ACCUMULATOR, AND REVERSING VALVE.

SEE SCHEDULE FOR LIST OF ACCEPTABLE MANUFACTURERS.

FAN COIL UNIT:

GENERAL: EXCEPT AS OTHERWISE INDICATED, PROVIDE FAN COIL UNIT MANUFACTURER'S STANDARD MATERIALS AND COMPONENTS AS INDICATED BY PUBLISHED PRODUCT INFORMATION, DESIGNED AND CONSTRUCTED AS RECOMMENDED BY MANUFACTURER, AND AS REQUIRED FOR A COMPLETE INSTALLATION.

COOLING COILS: EXCEPT AS OTHERWISE INDICATED, PROVIDE MANUFACTURER'S STANDARD COIL OF INDICATED TYPE AND RATED FOR INDICATED CAPACITY. COPPER TUBE COILS, MECHANICALLY EXPANDED INTO ALUMINUM PLATE FINS; RATED AT 250 PSIG AND LEAK TESTED AT 350 PSIG MIN. AIR PRESSURE. PROVIDE MANUAL AIR VENTS.

ELECTRIC HEATING COILS SHALL BE AN OPEN GRID TYPE WITH FACTORY INSTALLED HIGH LIMIT CONTROL. HEATER SHALL BE FULLY ACCEPTABLE THROUGH THE DISCHARGE GRILLE OPENINGS.

THE FAN SHALL BE A CENTRIFUGAL, FORWARD CURVED, DOUBLE WIDTH, DOUBLE INLET, DIRECT DRIVE TYPE. BALANCED STATICALLY AND DYNAMICALLY, AND OF INDICATED CAPACITY.

MOTORS SHALL BE OF INDICATED CAPACITY, 3 SPEED, PERMANENT SPLIT CAPACITOR, INSTALLED FOR EASY REMOVAL. PROVIDE MOTORS WITH AUTOMATIC-RESET AND INTEGRAL THERMAL OVERLOAD PROTECTION. MOTORS SHALL BE CAPABLE OF OPERATING AT TEMPERATURES INDICATED ON DRAWINGS WITHOUT OVERLOADING. MOTOR SHALL BE CAPABLE OF FIELD OILING AS REQUIRED.

CABINETS: CABINETS SHALL BE FABRICATED OF 18 GAUGE STEEL AND HAVE BAKED ENAMEL FINISH. ALL SURFACES IN CONTACT WITH AIR STREAM SHALL BE INSULATED WITH HALF INCH THICK, 1-1/2 POUND DENSITY, MATT FACED, GLASS FIBER INSULATION.

THE FILTER SHALL BE ONE INCH THICK, THROWAWAY GLASS FIBER TYPE.

THE DRAIN PAN SHALL BE REMOVABLE AND HAVE SELF EXTINGUISHER THREE (3) POUND DENSITY CELLULAR POLYSTYRENE PLASTIC LINER, THE DRAIN PAN SHALL EXTEND UNDER THE ENTIRE COIL SECTION.

THERMOSTAT SHALL BE 7-DAY PROGRAMMABLE TYPE.

SEE SCHEDULE FOR LIST OF ACCEPTABLE MANUFACTURERS.

SPECIFICATIONS

DIFFUSERS, GRILLES, & REGISTERS:

EGGCRATE GRILLE:

RETURN GRILLES SHALL BE TITUS MODEL 50F FOR THE SIZES AND MOUNTING TYPES AS SHOWN ON THE PLANS AND OUTLET SCHEDULE. RETURN GRILLES MUST PROVIDE A FREE AREA OF AT LEAST 90%. OUTER BORDERS SHALL BE CONSTRUCTED OF HEAVY EXTRUDED ALUMINUM WITH A THICKNESS OF 0.040-0.050 INCH AND SHALL HAVE COUNTERSUNK SCREW HOLES FOR A NEAT APPEARANCE. BORDER WIDTH SHALL BE 1¼ INCHES ON ALL SIDES AND SHALL BE INTERLOCKED AT THE FOUR CORNERS AND MECHANICALLY STAKED TO FORM A RIGID FRAME. CHOICE OF THREE SIZES OF ALUMINUM GRID: ½ X ½ X ½ INCH, ½ X ½ X 1 INCH, OR 1 X 1 X 1 INCH SHALL BE AVAILABLE.

OPTIONAL OPPOSED-BLADE VOLUME DAMPER SHALL BE CONSTRUCTED OF HEAVY GAUGE STEEL OR ALUMINUM. DAMPER MUST BE OPERABLE FROM THE FACE OF THE GRILLE.

DOUBLE DEFLECTION REGISTERS:

ALUMINUM SUPPLY GRILLES SHALL BE OF THE SIZES AND MOUNTING TYPES SHOWN ON THE PLANS AND OUTLET SCHEDULE. THE DEFLECTION BLADES SHALL BE AVAILABLE PARALLEL TO THE LONG OR SHORT DIMENSION OF THE GRILLE OR REGISTER. CONSTRUCTION SHALL BE OF ALUMINUM WITH A 1¼-INCH WIDE BORDER ON ALL SIDES. SIZES 24 X 24 INCHES AND BELOW SHALL HAVE ROLL-FORMED BORDERS WITH A MINIMUM THICKNESS OF 0.032 INCH. LARGER SIZES SHALL BE CONSTRUCTED USING CONTINUOUS ALUMINUM EXTRUSIONS WITH A NOMINAL THICKNESS OF 0.040 THROUGH 0.050 INCH AND SHALL BE INTERLOCKED AT THE FOUR CORNERS AND MECHANICALLY STAKED TO FORM A RIGID FRAME. SCREW HOLES SHALL BE COUNTERSUNK FOR A NEAT APPEARANCE.

DEFLECTION BLADES SHALL BE CONTOURED TO A SPECIFICALLY DESIGNED AND TESTED CROSS-SECTION TO MEET PUBLISHED TEST PERFORMANCE DATA. BLADES SHALL BE SPACED ON ¾-INCH CENTERS. BLADES SHALL HAVE FRICTION PIVOTS ON BOTH SIDES TO ALLOW INDIVIDUAL BLADE ADJUSTMENT WITHOUT LOOSENING OR RATTLING OR BE INSERTED THROUGH THE FRAME AND HELD TIGHT WITH STEEL FRICTION WIRE INTERLOCKED TO THE FRAME ON BOTH ENDS OF EACH SIDE. PLASTIC BLADE PIVOTS ARE NOT ACCEPTABLE.

OPTIONAL OPPOSED BLADE VOLUME DAMPER SHALL BE CONSTRUCTED OF HEAVY GAUGE STEEL OR ALUMINUM. DAMPER MUST BE OPERABLE FROM THE FACE OF THE GRILLE.

THE GRILLE FINISH SHALL BE #26 WHITE. THE FINISH SHALL BE AN ANODIC ACRYLIC PAINT, BAKED AT 315° F FOR 30 MINUTES. THE PENCIL HARDNESS MUST BE HB TO H. THE PAINT MUST PASS A 100-HOUR ASTM B117 CORROSIVE ENVIRONMENTS SALT SPRAY TEST WITHOUT CREEPAGE, BLISTERING OR DETERIORATION OF FILM. THE PAINT MUST PASS A 250-HOUR ASTM D870 WATER IMMERSION TEST. THE PAINT MUST ALSO PASS THE ASTM D2794 REVERSE IMPACT CRACKING TEST WITH A 50-INCH POUND FORCE APPLIED.

THE MANUFACTURER SHALL PROVIDE PUBLISHED PERFORMANCE DATA FOR THE GRILLE. THE GRILLE SHALL BE TESTED IN ACCORDANCE WITH ANSI/ASHRAE STANDARD 70-2006.

PLAQUE DIFFUSERS:

ARCHITECTURAL SQUARE PANEL CEILING DIFFUSERS SHALL BE OF THE SIZES AND MOUNTING TYPES SHOWN ON THE PLANS AND OUTLET SCHEDULE. THE FACE PANEL IS REMOVABLE BY MEANS OF FOUR HANGER BRACKETS. THE EXPOSED SURFACE OF THE FACE PANEL SHALL BE SMOOTH, FLAT, AND FREE OF VISIBLE FASTENERS.
THE BACK OF THE FACE PANEL SHALL HAVE AN AERODYNAMICALLY SHAPED, ROLLED EDGE TO ENSURE A TIGHT HORIZONTAL DISCHARGE PATTERN. CEILING DIFFUSERS WITH A 24 X 24-INCH FULL FACE SHALL HAVE NO LESS THAN AN 18 X 18-INCH FACE PANEL SIZE. CEILING DIFFUSERS WITH A 12 X 12-INCH FULL FACE SHALL HAVE NO LESS THAN A 9 X 9-INCH FACE PANEL SIZE.

THE BACKPAN SHALL BE ONE PIECE PRECISION DIE-STAMPED AND SHALL INCLUDE AN INTEGRALLY DRAWN INLET. THE DIFFUSER NECK SHALL HAVE A MINIMUM OF 1¼-INCH DEPTH AVAILABLE FOR DUCT CONNECTION.

THE FINISH SHALL BE #26 WHITE. THE FINISH SHALL BE AN ANODIC ACRYLIC PAINT, BAKED AT 315°F FOR 30 MINUTES. THE PENCIL HARDNESS MUST BE HB TO H.

THE PAINT MUST PASS A 100-HOUR ASTM B117 CORROSIVE ENVIRONMENTS SALT SPRAY TEST WITHOUT CREEPAGE, BLISTERING OR DETERIORATION OF FILM. THE PAINT MUST PASS A 250-HOUR ASTM D870 WATER IMMERSION TEST. THE PAINT MUST ALSO PASS THE ASTM D2794 REVERSE IMPACT CRACKING TEST WITH A 50-INCH POUND FORCE APPLIED.

OPTIONAL ROUND DAMPER SHALL BE CONSTRUCTED OF HEAVY GAUGE STEEL. DAMPER MUST BE OPERABLE FROM THE FACE OF THE DIFFUSER. OPTIONAL DIRECTIONAL BLOW CLIPS SHALL BE AVAILABLE TO RESTRICT THE DISCHARGE AIR IN CERTAIN DIRECTIONS.

OPTIONAL MOLDED INSULATION BLANKET SHALL BE AVAILABLE. THE INSULATION WILL BE R-6, FOIL-BACKED, AND PROVIDE AN ADDITIONAL 1-INCH GAP AROUND THE NECK TO INSTALL INSULATED FLEX DUCT.

THE MANUFACTURER SHALL PROVIDE PUBLISHED PERFORMANCE DATA FOR THE SQUARE PANEL DIFFUSER. THE DIFFUSER SHALL BE TESTED IN ACCORDANCE WITH ANSI/ASHRAE STANDARD 70-1991.

DUCTWORK AND ACCESSORIES:

INDUSTRY STANDARDS: COMPLY WITH SMACNA (SHEET METAL AND AIR CONDITIONING CONTRACTORS' NATIONAL ASSOCIATION) HVAC DUCT CONSTRUCTION STANDARDS, RECOMMENDATIONS FOR FABRICATION, GAUGES, CONSTRUCTION AND DETAILS, AND INSTALLATION PROCEDURES, EXCEPT AS OTHERWISE INDICATED.

COMPLY WITH ASHRAE (AMERICAN SOCIETY OF HEATING, REFRIGERATING AND AIR CONDITIONING ENGINEERS) FUNDAMENTALS HANDBOOK RECOMMENDATIONS, EXCEPT AS OTHERWISE INDICATED.

DUCTWORK METAL AND GAUGES: EXCEPT AS OTHERWISE INDICATED, FABRICATE DUCTWORK FROM GALVANIZED SHEET STEEL COMPLYING WITH ASTM A527, LOCKFORMING QUALITY, WITH ASTM A525 G90 ZINC COATING, MILL PHOSPHATIZED. GAUGES TO COMPLY WITH SMACNA STANDARDS.

DUCT SEALANT: NON-HARDENING, NON-MIGRATING MASTIC OR LIQUID ELASTIC SEALANT (TYPE APPLICABLE FOR THE FABRICATION/INSTALLATION DETAIL) AS COMPOUNDED AND RECOMMENDED BY THE MANUFACTURER SPECIFICALLY FOR SEALING JOINTS AND SEAMS IN DUCTWORK.

DUCTWORK SUPPORT MATERIALS: EXCEPT AS OTHERWISE INDICATED, PROVIDE UPPER ATTACHMENT, HANGERS OF GALVANIZED STEEL STRAPS, OR STEEL RODS AND LOWER ATTACHMENT FOR SUPPORT OF DUCTWORK. HANGING/SUPPORT SYSTEMS SHALL BE IN ACCORDANCE WITH SMACNA REQUIREMENTS.

EXPOSED DUCTWORK SHALL BE DOUBLE-WALL SPIRAL PIPE WITH PAINT GRIP UNLESS OTHERWISE NOTED OR SUBSTITUTION APPROVED BY OWNER.

VOLUNTARY ALTERNATE EXPOSED DUCTWORK SHALL BE SINGLE-WALL SPIRAL PIPE UNLESS OTHERWISE NOTED OR SUBSTITUTION APPROVED BY OWNER. ALL EXPOSED DUCTWORK SHALL BE LINED IN LIEU OF WRAPPED. DUCT LINER THERMAL RESISTANCE SHALL MEET THE MINIMUM VALUES SPECIFIED IN PARAGRAPH 'DUCT INSULATION' BELOW.

DUCTWORK LOCATED OUTSIDE OF THE BUILDING ENVELOPE SHALL BE THERMADUCT PRODUCTS OR COVERED WITH 3M VENTURECLAD JACKETING, OR EQUAL PRODUCT, AND SEALED WEATHER-TIGHT.

DUCT INSULATION:

R-6 SUPPLY, OUTSIDE AND RETURN AIR DUCT INSULATION IN CONDITIONED AND UNCONDITIONED SPACES
R-8 SUPPLY AND RETURN AIR DUCT INSULATION OUTSIDE THE BUILDING
R-8 INSULATION BETWEEN DUCTS AND THE BUILDING EXTERIOR WHEN DUCTS ARE PART OF A BUILDING ASSEMBLY

SPECIFICATIONS

APPLICABLE CODES:

INTERNATIONAL FIRE CODE (IFC), 2018 EDITION
2020 IFC GA AMENDMENTS
INTERNATIONAL PLUMBING CODE (IPC), 2018 EDITION
2020, 2022, 2023 & 2024 IPC GA AMENDMENTS
INTERNATIONAL MECHANICAL CODE (IMC), 2018 EDITION
2020 & 2024 IMC GA AMENDMENTS
INTERNATIONAL FUEL GAS CODE (IFGC), 2018 EDITION
2020 & 2022 IFGC GA AMENDMENTS
INTERNATIONAL ENERGY CONSERVATION CODE (IECC), 2015 EDITION
2020, 2022 & 2023 SUPPLEMENTS AND AMENDMENTS

EXISTING CONDITIONS:

CONTRACTOR SHALL VISIT THE SITE AND UNDERSTAND JOB CONDITIONS BEFORE SUBMITTING A PROPOSAL. IT SHALL BE THE CONTRACTOR'S RESPONSIBILITY TO VERIFY LOCATIONS AND SIZES OF ALL EXISTING UTILITY SERVICES PRIOR TO SUBMITTING HIS PROPOSAL. NO CONSIDERATION WILL BE GIVEN TO CLAIMS FOR EXTRA COST ARISING FROM CONTRACTOR'S FAILURE TO BE FULLY COGNIZANT OF JOB OR SITE CONDITIONS EXISTING AT TIME OF ACCEPTANCE OF BID.

ACTIVE SERVICES: WHEN ENCOUNTERED IN WORK, PROTECT, BRACE, SUPPORT EXISTING ACTIVE SEWERS, GAS AND OTHER SERVICES REQUIRED FOR PROPER EXECUTION OF WORK. IF EXISTING ACTIVE SERVICES ARE ENCOUNTERED THAT REQUIRE RELOCATION, RELOCATE AS APPROVED. DO NOT PREVENT OR DISTURB OPERATION OF ACTIVE SERVICES THAT ARE TO REMAIN.

INACTIVE SERVICES: WHEN ENCOUNTERED IN WORK, REMOVE, CAP OR PLUG INACTIVE SERVICES, AS INDICATED.

INTERRUPTION OF SERVICES: WHERE WORK MAKES TEMPORARY SHUT-DOWNS OF SERVICES UNAVOIDABLE, SHUT DOWN AT NIGHT, OR AT SUCH TIMES AS APPROVED BY OWNER, WHICH WILL CAUSE LEAST INTERFERENCE WITH ESTABLISHED OPERATING ROUTINE. ARRANGE WORK TO ASSURE THAT SERVICES WILL BE SHUT DOWN ONLY DURING TIME ACTUALLY REQUIRED TO MAKE NECESSARY CONNECTION TO EXISTING WORK.

WHERE EXISTING WALLS, CEILINGS, FLOORS, ETC., ARE CUT OR OTHERWISE DAMAGED DURING CONSTRUCTION, REPAIR ALL SURFACES TO THEIR ORIGINAL CONDITION.

SHOP DRAWINGS:

SUBMIT SHOP DRAWINGS FOR REVIEW. PDF FILES PREFERRED. SHOP DRAWINGS SHALL BE BOUND INTO VOLUMES (FILES), WITH EACH VOLUME (FILE) CONTAINING ONE COPY OF ALL SHOP DRAWINGS. ALL SHOP DRAWINGS SHALL BE SUBMITTED SIMULTANEOUSLY; NO SHOP DRAWINGS WILL BE CHECKED UNTIL ALL HAVE BEEN SUBMITTED.

SUBMITTALS SHALL BE SUPPORTED BY DESCRIPTIVE MATERIAL, SUCH AS CATALOG CUTS, DIAGRAMS, PERFORMANCE CURVES AND CHARTS PUBLISHED BY THE MANUFACTURER, TO SHOW CONFORMANCE TO SPECIFICATION AND DRAWING REQUIREMENTS; MODEL NUMBERS ALONE WILL NOT BE ACCEPTABLE. ALL LITERATURE SHALL CLEARLY INDICATE THE SPECIFIED MODEL NUMBER, DIMENSIONS, ARRANGEMENT, RATING AND CHARACTERISTICS OF THE PROPOSED EQUIPMENT. CAPACITIES AND RATINGS SHALL BE BASED ON CONDITIONS INDICATED OR SPECIFIED HEREIN. ANY DEVIATIONS FROM SPECIFIED EQUIPMENT (PARTICULARLY THOSE WHICH REQUIRE COORDINATION WITH OTHER TRADES) SHALL BE CLEARLY NOTED IN A CONCISE LIST ON A SEPARATE SHEET.

TEST AND BALANCE:

TEST AND BALANCE (TAB) CONTRACTOR SHALL HOLD A CURRENT NATIONAL BALANCING COUNCIL (NBC) CERTIFICATION AND POSSESS ACCURATE AND CALIBRATED INSTRUMENTS. TAB WORK AND REPORTS SHALL BE PER NBC PRACTICAL STANDARDS, PROCEDURES AND FORMS. ACCEPTIBLE ALTERNATIVE TAB FIRM CERTIFICATIONS/PROCEDURES: NEBB, AABC, OR TABB.

PRIOR TO COMMENCEMENT OF THE TAB WORK, THE MECHANICAL SYSTEMS ARE TO BE STARTED AND FULLY FUNCTIONING. A CHECKLIST PRIOR TAB WORK IS TO BE SENT TO THE INSTALLING CONTRACTOR AND RETURNED ATTESTING TO THE READINESS OF THE SYSTEMS FOR BALANCING.

IN ADDITION TO STANDARD TESTING PROCEDURES, THE TAB CONTRACTOR SHALL RECORD AND REPORT THE LEAVING AIR TEMPERATURES OF ALL UNITS DURING HEATING MODE, COOLING MODE, AND IF APPLICABLE, REHEAT MODE.

PREFERRED TAB FIRM: P-TAB.COM

GUARANTEE:

GUARANTEE THAT EACH PIECE OF APPARATUS SHALL BE OF THE CUSTOMARY STANDARD AND QUALITY FURNISHED BY THE DESIGNED MANUFACTURER FOR THAT CATALOG NUMBER.

GUARANTEE THAT THE AIR SYSTEMS SHALL OPERATE WITHOUT AERODYNAMIC NOISE GENERATED FROM THE FAULTY INSTALLATION OF DUCT WORK OR ANY COMPONENT OF THE AIR DISTRIBUTION SYSTEM.

GUARANTEE THAT ALL SYSTEMS AND COMPONENTS SHALL BE PROVIDED WITH A ONE YEAR WARRANTY FROM THE TIME OF DATE OF SUBSTANTIAL COMPLETION. THE WARRANTY SHALL COVER ALL MATERIALS AND WORKMANSHIP. DURING THIS WARRANTY PERIOD, ALL DEFECTS IN MATERIALS AND WORKMANSHIP SHALL BE CORRECTED BY REPAIR OR REPLACEMENT WITHOUT INCURRING ADDITIONS TO THE CONTRACT.

GENERAL NOTES:

REFER TO ARCHITECTURAL REFLECTED CEILING PLANS FOR EXACT LOCATION OF ALL CEILING MOUNTED EQUIPMENT.

ALL DUCT DIMENSIONS INDICATED IN THESE DOCUMENTS ARE INSIDE-CLEAR DIMENSIONS.

PORTIONS OF DUCTWORK OR PIPING VISIBLE THROUGH GRILLES AND REGISTERS IN FINISHED AREAS SHALL BE PAINTED FLAT BLACK. PAINT BLACK BEHIND ALL GRILLES.

ALL WIRING IN THE CEILING PLENUM SHALL BE PLENUM RATED CABLE.

MOUNTING FRAME OF CEILING MOUNTED AIR DISTRIBUTION DEVICES SHALL BE COMPATIBLE WITH CEILING TYPE. REFER TO ARCHITECTURAL DRAWINGS FOR CEILING TYPE.

ALL FIRE SEPARATIONS MUST BE PROTECTED WHEN APPLICABLE.

PROVIDE NEW FILTERS (MERV 7 OR BETTER PER OWNER) FOR ALL APPLICABLE HVAC EQUIPMENT AT THE END OF CONSTRUCTION.

ALL MATERIAL IN PLENUM MUST MEET FIRE AND SMOKE SPREAD AS REQUIRED BY NFPA 90A.

ALL ROOF PENETRATIONS TO BE 12" APART AND AT LEAST 12" AWAY FROM CURBS, WALLS, AND DRAIN SUMPS TO PROVIDE ROOFING CONTRACTOR WITH SUFFICIENT ACCESS FOR FLASHING EACH ROOF PENETRATION.

SUBSTITUTIONS MUST BE APPROVED IN WRITING BY ARCHITECT PRIOR TO BID SUBMISSION.

CONTRACTOR SHALL REVIEW ALL CONTRACT DOCUMENTS AND SHALL BE FAMILIAR WITH THE SCOPE AND REQUIREMENTS OF THIS PROJECT. ANY DISCREPANCIES OR LACK OF CLARITY IN THE DOCUMENTS SHALL BE IDENTIFIED TO THE ARCHITECT OR ENGINEER PRIOR TO THE SUBMISSION OF PRICING BIDS. WITH A SUBMITTED BID, CONTRACTOR IS ACCEPTING THESE DOCUMENTS AS SUFFICIENT DEFINITION OF THE SCOPE OF WORK, AND ANY ADDITIONAL COSTS BASED ON UNCLARITY OF CONTRACT DOCUMENTS WILL NOT BE CONSIDERED.

THE CONTRACTOR SHALL REFERENCE THE FULL SET OF CONSTRUCTION DOCUMENTS DURING PRICING AND CONSTRUCTION FOR COORDINATION BETWEEN DISCIPLINES RELATIVE TO THE MECHANICAL SCOPE.

PROFICIENT ENGINEERING
3150 Holcomb Bridge Road
Norcross, Georgia 30071
404.330.9798
PROJECT # 125614

LEGEND

SYMBOLS	DESCRIPTION
X1 / X2	DIFFUSER, GRILLE, REGISTER OR LOUVER TAG X1 = TYPE, X2 = CFM
	POSITIVE PRESSURE (AIR GOES OUT) DIFFUSER OR REGISTER, 4-WAY AIR PATTERN (UNLESS OTHERWISE NOTED)
	NEGATIVE PRESSURE (AIR GOES IN) GRILLE
	POSITIVE PRESSURE AIRFLOW (TYP. SUPPLY)
	NEGATIVE PRESSURE AIRFLOW (TYP. RETURN/EXHAUST)
	FLEXIBLE DUCT
	MANUAL VOLUME DAMPER (MVD)
	BACKDRAFT DAMPER (BDD)
FD	VERTICAL (TYP. WALL) FIRE DAMPER
FSD	VERTICAL (TYP. WALL) COMBINATION FIRE/SMOKE DAMPER
FD	HORIZONTAL (TYP. FLOOR/CEILING) FIRE DAMPER
FSD	HORIZONTAL (TYP. FLOOR/CEILING) COMBINATION FIRE/SMOKE DAMPER
T	THERMOSTAT
H	HUMIDISTAT
S	REMOTE TEMPERATURE SENSOR
	INTERNALLY LINED DUCT
	DUCT UP
	DUCT UP
	DUCT DOWN
	SUPPLY DUCT
UNIT #	EQUIPMENT TYPE EQUIPMENT NUMBER. WHERE A LETTER IS USED, THERE ARE MULTIPLE INSTANCES.

ABBREVIATIONS

AFF	ABOVE FINISHED FLOOR	M	MOTOR
BDD	BACKDRAFT DAMPER	MA	MAKE-UP AIR
AHU	AIR HANDLING UNIT	MAU	MAKE-UP AIR UNIT
CO2	CARBON DIOXIDE	MAV	MANUAL AIR VENT
CU	CONDENSING UNIT	MBH	1,000 BTU PER HR
D	CONDENSATE DRAIN	MFCU	MINI FAN COIL UNIT
DB	DRY BULB	MHP	MINI HEAT PUMP
DH	DEHUMIDIFIER	MVD	MANUAL VOLUME DAMPER
EA	EXHAUST AIR	NC	NORMALLY CLOSED
EAT	ENTERING AIR TEMPERATURE	NO	NORMALLY OPEN
EDH	ELECTRIC DUCT HEATER	OA	OUTSIDE AIR
EF	EXHAUST FAN	OBD	OPPOSED BLADE DAMPER
ESP	EXTERNAL STATIC PRESSURE	PIU	POWER INDUCTION UNIT
EWH	ELECTRIC WALL HEATER	RA	RETURN AIR
F	DEGREES FAHRENHEIT	RH	RELIEF HOOD
FCU	FAN COIL UNIT	RTU	ROOFTOP UNIT
FD	FIRE DAMPER	SA	SUPPLY AIR
FSD	COMBINATION FIRE/SMOKE DAMPER	SP	STATIC PRESSURE
FURN	FURNACE	U.N.O	UNLESS NOTED OTHERWISE
H	HUMIDISTAT	UC	UNDER CUT DOOR
IH	INTAKE HOOD	VAV	VARIABLE AIR VOLUME
LAT	LEAVING AIR TEMPERATURE	WB	WET BULB
LWT	LEAVING WATER TEMPERATURE	WL	WALL LOUVER

STROUD AND COMPANY
427 8th Street · Macon, Ga 31201
478-743-5097

ALL Architecture, LLC
2052 CHRYSLER DRIVE NE, ATLANTA, GA 30345
TELEPHONE: (404) 316-2896
E-MAIL: INFO@ALLARCHLLC.COM

REVISIONS

NO.	DATE

COPYRIGHT
THIS DRAWING AND ALL REPRODUCTIONS ARE COPYRIGHTED AND THE PROPERTY OF ALL ARCHITECTURE, LLC & MAY NOT BE USED IN ANY WAY WITHOUT THEIR PERMISSION.

PROJECT TITLE:
NATIONWIDE CONSTRUCTION GROUP - RENOVATION
201 GRISWOLDVILLE INDUSTRIAL BLVD
MACON, GEORGIA 31217

SEAL:
GEORGIA REGISTERED No. 034608 PROFESSIONAL ENGINEER JENNIFER DUCHAC

DRAWN: AB	CHECKED: JD
APPROVED: JCA	ISSUE DATE: 07/07/25

CAD FILE NAME: 25022.dwg

SHEET TITLE: GENERAL

PROJECT NUMBER: 25022.1

SHEET NO: M001

ISSUED FOR CONSTRUCTION

PLOT DATE: 7/15/2025 10:29:40 AM

PROFICIENT
ENGINEERING
3150 Holcomb Bridge Road
Norcross, Georgia 30071
404.330.9798
PROJECT # 125414

CONDENSATE TRAP (DRAW THROUGH UNIT)

NO SCALE

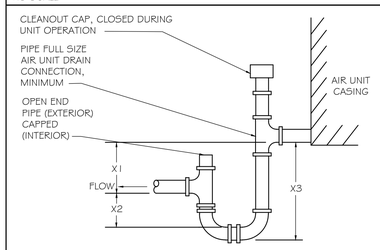

WHERE:

X1 =1" PLUS MAXIMUM NEGATIVE STATIC PRESSURE

X2 =HALF OF X1

X3 =X1+X2+PIPE Ø+INSULATION

NOTES

1. LOCATE TRAPS SO AS TO BE ACCESSIBLE FOR CLEANING.

DIFFUSER TAKE-OFF DETAIL

NO SCALE

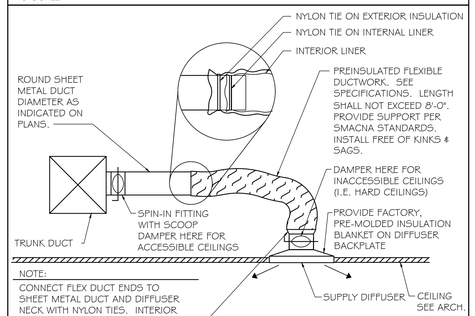

NOTE:

CONNECT FLEX DUCT ENDS TO SHEET METAL DUCT AND DIFFUSER NECK WITH NYLON TIES. INTERIOR LINER AND EXTERIOR INSULATION OF FLEX DUCT TO BE TIED INDIVIDUALLY. INSTALL USING TENSIONING TOOL AS PER MANUFACTURER'S RECOMMENDATIONS.

HORIZONTAL FAN COIL UNIT DETAIL

NO SCALE

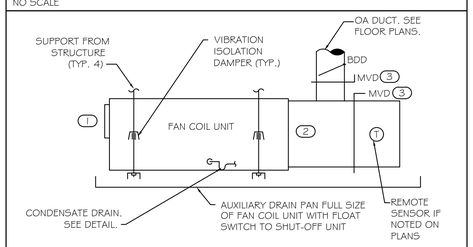

KEY NOTES:

1. SUPPLY AIR DISCHARGE. PROVIDE FLEXIBLE CONNECTION AND TRANSITION TO SUPPLY AIR DUCT SIZE SHOWN ON FLOOR PLANS.
2. RETURN AIR PLENUM FULL SIZE OF RETURN AIR OPENING. SEE FLOOR PLAN(S) FOR DUCT CONNECTIONS.
3. PROVIDE MOTOR OPERATED DAMPERS WHERE ECONOMIZER OR DEMAND VENTILATION IS SCHEDULED.

DUCTWORK DETAILS

NO SCALE

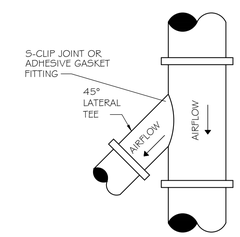

ROUND - ROUND

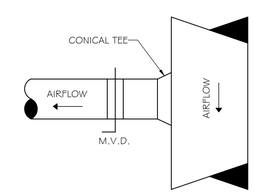

RECTANGULAR - ROUND

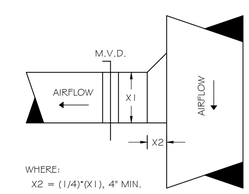

WHERE:

X2 = (1/4)*(X1), 4" MIN.

RECTANGULAR - RECTANGULAR

STROUD AND COMPANY
427 8th Street · Macon, Ga 31201
478-743-5097

ALL Architecture, LLC
2052 CHRYSLER DRIVE NE, ATLANTA, GA 30345
TELEPHONE: (404) 316-2896
E-MAIL: INFO@ALLARCHLLC.COM

REVISIONS	
NO.	DATE

COPYRIGHT
THIS DRAWING AND ALL REPRODUCTIONS ARE COPYRIGHTED AND THE PROPERTY OF ALL ARCHITECTURE LLC AND MAY NOT BE USED IN ANY WAY WITHOUT THEIR PERMISSION.

PROJECT TITLE:

NATIONWIDE CONSTRUCTION GROUP - RENOVATION

201 GRISWOLDVILLE INDUSTRIAL BLVD
MACON, GEORGIA 31217

SEAL:

GEORGIA REGISTERED No. 034608 PROFESSIONAL ENGINEER JENNIFER DUCHAC

DRAWN:	CHECKED:
AB	JD
APPROVED:	ISSUE DATE:
JCA	07/07/25

CAD FILE NAME: 25022.dwg

SHEET TITLE: DETAILS

PROJECT NUMBER: 25022.1

SHEET NO: M002

ISSUED FOR CONSTRUCTION

PLOT DATE: 7/15/2025 10:29:42 AM

PROFICIENT ENGINEERING
3150 Holcomb Bridge Road
Norcross, Georgia 30071
404.330.9798
PROJECT # 125414

AIR PURIFICATION SCHEDULE

ZONE TAG	FLOW	SA FLOW	OA FLOW	GPS MODEL	PRESSURE DROP	VOLTAGE (AC)	WATTS	MIN ION DENSITY (IONS/CC)	NOTES
FCU-2	CV	1600	200	GPS-FC24-AC	0.05" W.C.	24-240	8	300 MILLION	1 TO 8

1. BASIS OF DESIGN: GLOBAL PLASMA SOLUTIONS. APPROVED EQUALS BY AIRGENICS AND BIOXGEN, SUBJECT TO SPECIFICATION COMPLIANCE.
2. MOUNT BI-POLAR ION GENERATOR WHERE INDICATED ON SCHEDULE
3. IF CONTRACTOR SUBSTITUTES BASIS OF DESIGN WITH ANOTHER MANUFACTURER, CONTRACTOR SHALL COORDINATE ALL ELECTRICAL AND MECHANICAL CHANGES.
4. BI-POLAR IONIZATION SYSTEMS REQUIRING PERISHABLE GLASS TUBES ARE NOT ACCEPTABLE
5. ALL MANUFACTURERS MUST PASS UL-867-2007 OZONE CHAMBER TESTING BY EITHER UL OR ETL
6. PROVIDE WITH WEATHERPROOF ENCLOSURE.
7. PROVIDE WITH SELF-CLEANING FEATURE. SYSTEMS WITHOUT SELF-CLEANING SHALL NOT BE ACCEPTABLE.
8. PROVIDE STEP-DOWN TRANSFORMER.

DIFFUSER, GRILLE, AND REGISTER SCHEDULE

CALLOUT	DESCRIPTION	FACE SIZE (IN)	INLET SIZE (IN)	NOISE CRITERIA @ MAX CFM	MODEL
RC1212	EGGCRATE GRILLE	12x12	12x12	25	TITUS 50F
RC2424	EGGCRATE GRILLE	24x24	24x24	25	TITUS 50F
RS1806	EGGCRATE GRILLE	18x6	18x6	25	TITUS 50F
SCP06	SUPPLY CEILING PLAQUE DIFFUSER	24x24	6Ø	25	TITUS OMNI
SCP08	SUPPLY CEILING PLAQUE DIFFUSER	24x24	8Ø	25	TITUS OMNI
SCP10	SUPPLY CEILING PLAQUE DIFFUSER	24x24	10Ø	25	TITUS OMNI
SS1806	DOUBLE DEFLECTION SUPPLY	20x8	18x6	25	TITUS 300FS

A. AIR DEVICE (I.E. DIFFUSERS, REGISTERS AND GRILLES) COLOR SELECTION SHALL BE MADE BY ARCHITECT. CONTRACTOR SHALL SUBMIT COLOR/FINISH CHARTS FOR ARCHITECTURAL REVIEW AND SELECTION.
B. THE CONTRACTOR SHALL COORDINATE AIR DEVICE FRAME AND/OR SUSPENSION TYPE WITH THE ARCHITECTURAL REFLECTED CEILING PLAN.

SPLIT DIRECT EXPANSION (DX) EQUIPMENT

INDOOR UNIT									OUTDOOR UNIT						COMBINED COOLING CAPACITIES							REMARKS							
															COOLING															
MARK	SERVES	TOTAL SA (CFM)	OA (CFM)	ESP (IN WG)	MOTOR (HP)	AUXILIARY HEATER (KW @ 208V)	WEIGHT (LBS)	BASIS OF DESIGN	MIN. SEER2	MIN. HSPF2	WEIGHT (LBS)	REFRIG. CHARGE (LBS)	BASIS OF DESIGN	NOMINAL TONNAGE (TONS)	TOTAL (MBH)	SENS (MBH)	LAT (MBH)	ENT TDB (°F)	ENT TWB (°F)	LVG TDB (°F)	LVG TWB (°F)	1	2	3	4	5	6	7	8
FCU-1 / HP-1	WAITING	1,200	120	0.50	1/2 ECM	6.0	148.0	FJ5AN--36	14.5	7.5	173.0	7.6	27SCA536	3.0	38.3	27.4	10.9	76.9	65.1	55.0	54.0	X	X	X	X	X	X	X	
FCU-2 / HP-2	CONFERENCE	1,600	200	0.50	3/4 ECM	11.3	183.0	FJ5AN--48	15.0	7.5	232.0	10.5	27SCA548	4.0	48.2	37.2	11.0	77.4	65.4	55.0	55.0	X	X	X	X	X	X	X	X
FCU-3 / HP-3	TRAINING, BREAK	1,990	320	0.50	3/4 ECM	11.3	211.0	FJ5AN--60	14.5	7.5	234.0	8.7	27SCA560	5.0	62.4	47.6	14.8	78.0	65.7	55.0	55.0	X	X	X	X	X	X	X	

NOTES (APPLY TO ALL):

A. SEE ELECTRICAL DRAWINGS FOR POWER REQUIREMENTS.
B. SUBMITTED UNIT CAPACITIES SHOULD BE WITHIN +/-10% OF SCHEDULED CAPACITIES.
C. BASIS OF DESIGN: CARRIER. REFER TO SPECIFICATIONS. ACCEPTABLE ALTERNATES: JCI/YORK, TRANE, DAIKIN/MCQUAY, LENNOX.
D. ALL EVAPORATORS AND COOLING COILS LOCATED ABOVE LOWEST LEVEL FINISHED FLOOR SHALL BE INSTALLED WITH AN AUXILIARY CONDENSATE DRAIN PAN UNDER THE UNIT. PROVIDE AN ELECTRONIC WATER LEVEL DETECTOR WIRED TO SHUT DOWN THE UNIT UPON DETECTION OF WATER IN THE AUXILIARY DRAIN PAN.
E. AS AN ALTERNATIVE TO THE AUXILIARY CONDENSATE DRAIN PAN, AN ELECTRONIC WATER LEVEL DETECTOR WIRED TO SHUT DOWN THE UNIT UPON DETECTION OF WATER MAY BE INSTALLED IN THE PRIMARY DRAIN LINE, OVERFLOW DRAIN LINE OR EQUIPMENT-SUPPLIED DRAIN PAN. WATER LEVEL DETECTOR SHALL BE LOCATED AT A POINT HIGHER THAN THE PRIMARY DRAIN LINE CONNECTION AND BELOW THE OVERFLOW RIM OF SUCH PAN.
F. R-454B REFRIGERANT

REMARKS (APPLY AS SCHEDULED):

1. PROGRAMMABLE THERMOSTAT.
2. LOW AMBIENT PACKAGE.
3. DISPOSABLE FILTER.
4. ANTI-SHORT CYCLE TIMER.
5. INDOOR FAN DELAY KIT.
6. DISCONNECT SWITCH PROVIDED BY ELECTRICAL SUBCONTRACTOR AT BOTH THE INDOOR AND OUTDOOR UNIT. REFER TO THE ELECTRICAL DOCUMENTS.
7. MOUNT OUTDOOR HEAT PUMP ON CONCRETE HOUSEKEEPING PAD. PAD SHALL BE A MINIMUM 4" THICK AND SHALL EXTEND 6" BEYOND UNIT ON ALL SIDES.
8. PROVIDE AND INSTALL BIPOLAR IONIZATION UNIT. REFER TO AIR PURIFICATION SCHEDULE.

UNIT HEATER - ELECTRIC

MARK	FAN		HEATING		BASIS OF DESIGN	WEIGHT
	AIRFLOW (CFM)	MOTOR (HP)	KW	STAGES		(LBS)
UH-A	350	1/100	5.0	1	QMARK MUH	27.0

NOTES: (APPLY TO ALL)

A. DISCONNECT SWITCH PROVIDED BY THE ELECTRICAL SUBCONTRACTOR.
B. 24V CONTROL TRANSFORMER AND REMOTE / WALL MOUNTED THERMOSTAT. THERMOSTAT SET TO 55°F (ADJ.).
C. AUTOMATIC THERMAL CUT-OUT.
D. FAN DELAY.
E. ADJUSTABLE DISCHARGE LOUVERS.

FAN SCHEDULE

MARK	DUTY	TYPE	CFM	ESP (IN WG)	MOTOR (W / HP*)	DRIVE	MAX NOISE (SONES)	CONTROL BY	BASIS OF DESIGN MODEL	REMARKS				
										1	2	3	4	5
EF-1	EXHAUST	CEILING CABINET	140	0.5	150	DIRECT	3.5	OCCUPANCY SENSOR (MOUNTED ABOVE DOOR)	GREENHECK SP	X	X	X		
EF-2	EXHAUST	CEILING CABINET	140	0.5	150	DIRECT	3.5	OCCUPANCY SENSOR (MOUNTED ABOVE DOOR)	GREENHECK SP	X	X	X		
EF-3	EXHAUST	CEILING CABINET	70	0.5	100	DIRECT	2.0	OCCUPANCY SENSOR	GREENHECK SP	X	X	X		
EF-4	EXHAUST	PROPELLER	200	0.1	0.01	DIRECT	1.7	RUNNING CONTINUOUSLY	GREENHECK SE1	X	X	X	X	X

NOTES (APPLY TO ALL):

A. SEE ELECTRICAL PLANS FOR POWER CHARACTERISTICS
B. DESIGN IS BASED ON PRODUCTS BY GREENHECK. ACCEPTABLE ALTERNATES SHALL BE BY LOREN-COOK, TWIN-CITY, PENN BARRY.

REMARKS (APPLY AS SCHEDULED):

1. INTEGRATED FAN SPEED CONTROLLER INSIDE FAN FOR BALANCING.
2. FACTORY DISCONNECT SWITCH/PLUG.
3. GRAVITY BACKDRAFT DAMPER.
4. PROPELLER GUARD.
5. WALL HOUSING.

LOUVERS

SYMBOL	MODEL / SERIES	SERVES	SIZE (WxH) (IN)	MIN FREE AREA (SF)	CFM	MAX PRESS. DROP (IN WC)	OPERATOR	INTERLOCK	FRAME	REMARKS		
										1	2	3
WL-1	ESD-635	WAREHOUSE VENTILATION	18x12	0.3	200	0.1	MOD	EF-4	ALUMINUM	X	X	X

NOTES (APPLY TO ALL):

A. FINAL COLOR SELECTION SHALL BE MADE BY ARCHITECT AT TIME OF SHOP DRAWING APPROVAL. PROVIDE COLOR/FINISH CHARTS AS PART OF SUBMITTAL.
B. DESIGN IS BASED ON PRODUCTS BY GREENHECK. ACCEPTABLE ALTERNATES SHALL BE BY UNITED ENERTECH, ARROW, RUSKIN.

REMARKS (APPLY AS SCHEDULED):

1. BIRD SCREEN
2. BAKED ON ENAMEL FINISH.
3. 120V MOTORIZED DAMPER.

STROUD AND COMPANY
427 8th Street · Macon, Ga 31201
478-743-5097

ALL Architecture, LLC
2052 CHRYSLER DRIVE NE, ATLANTA, GA 30345
TELEPHONE: (404) 316-2896
E-MAIL: INFO@ALLARCHLLC.COM

REVISIONS

NO.	DATE

COPYRIGHT
THIS DRAWING AND ALL REPRODUCTIONS ARE COPYRIGHTED AND THE PROPERTY OF ALL ARCHITECT. IT MAY NOT BE USED IN ANY WAY WITHOUT THEIR PERMISSION.

PROJECT TITLE:
NATIONWIDE CONSTRUCTION GROUP - RENOVATION
201 GRISWOLDVILLE INDUSTRIAL BLVD
MACON, GEORGIA 31217

SEAL:
GEORGIA REGISTERED No. 034608 PROFESSIONAL ENGINEER JENNIFER DUCHAC

DRAWN: AB	CHECKED: JD
APPROVED: JCA	ISSUE DATE: 07/07/25

CAD FILE NAME: 25022.dwg

SHEET TITLE: SCHEDULES

PROJECT NUMBER: 25022.1

SHEET NO: M003

ISSUED FOR CONSTRUCTION

PLOT DATE: 7/15/2025 10:28:43 AM

GENERAL NOTES

A. EACH SUPPLY DIFFUSER/REGISTER RUNOUT SHALL BE PROVIDED WITH A VOLUME DAMPER. REFER TO THE DIFFUSER TAKE-OFF DETAIL FOR ADDITIONAL INFORMATION.

B. DRAWINGS ARE DIAGRAMMATIC ONLY; FINAL ROUTING OF DUCTWORK AND EQUIPMENT LOCATIONS SHALL BE DETERMINED IN THE FIELD. ADDITIONAL OFFSETS, ELBOWS, ETC. SHALL BE PROVIDED AND INSTALLED WITHOUT ADDITIONAL COST TO THE OWNER.

C. DEMOLISH AND REMOVE FROM SITE ALL EXISTING MECHANICAL EQUIPMENT, DUCTWORK, AND DIFFUSERS. PROVIDE NEW AS SHOWN.

D. TRAP & ROUTE 1"Ø CONDENSATE DRAIN LINE FROM EACH FAN COIL UNIT TO SPLASH BLOCK ON GRADE. TERMINATE IN A LOCATION THAT WILL NOT CAUSE A NUISANCE.

E. ALL EXHAUST TERMINATIONS SHALL BE LOCATED A MINIMUM OF 10'-0" AWAY FROM MECHANICAL AIR INTAKES AND A MINIMUM OF 3'-0" AWAY FROM OPERABLE BUILDING OPENINGS.

KEYNOTES

1. EXHAUST DUCT ROUTED TO EXTERIOR ROOF CAP WITH INSECT SCREEN.
2. EXHAUST DUCT ROUTED TO EXTERIOR WALL CAP WITH INSECT SCREEN. WALL CAP COLOR AND FINISH SHALL BE SELECTED BY THE ARCHITECT.
3. UNDERCUT DOOR 3/4".
4. MOUNT THERMOSTAT ON THERMALLY INSULATED BACK PLATE.
5. OUTSIDE AIR DUCT ROUTED FROM EXTERIOR ROOF CAP WITH INSECT SCREEN.

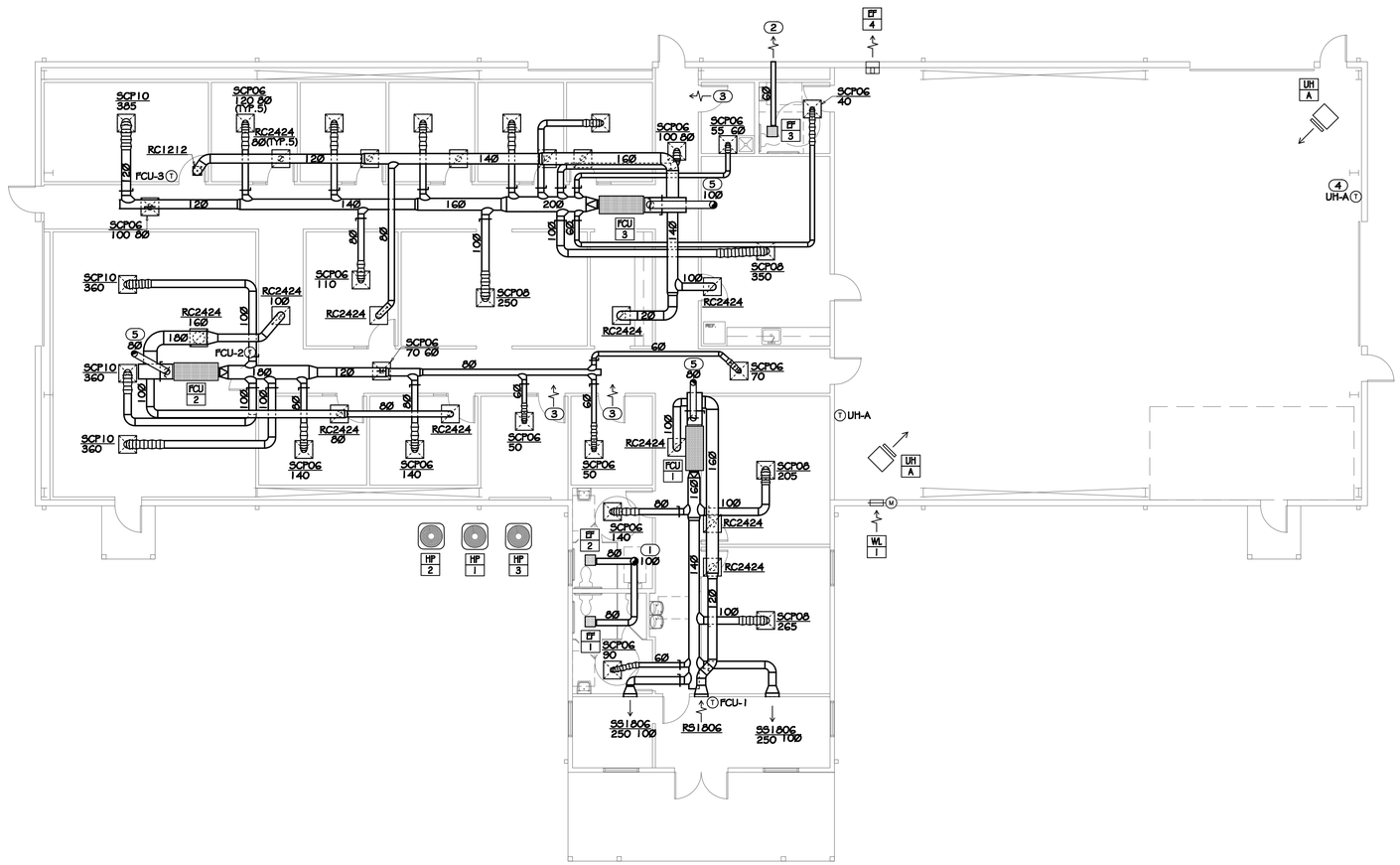

PHASE 1 FLOOR PLAN

1 / M100

SCALE: 1/8" = 1'-0"

0 4 8 16

PROFICIENT ENGINEERING
3150 Holcomb Bridge Road
Norcross, Georgia 30071
404.330.9798
PROJECT # 125414

STROUD AND COMPANY
427 8th Street · Macon, Ga 31201
478-743-5097

ALL Architecture, LLC
2052 CHRYSLER DRIVE NE, ATLANTA, GA 30345
TELEPHONE: (404) 316-2896
E-MAIL: INFO@ALLARCHLLC.COM

REVISIONS

NO.	DATE

COPYRIGHT
THIS DRAWING AND ALL REPRODUCTIONS ARE COPYRIGHTED AND THE PROPERTY OF ALL ARCHITECTURE LLC AND MAY NOT BE USED IN ANY WAY WITHOUT THEIR PERMISSION.

PROJECT TITLE:

NATIONWIDE CONSTRUCTION GROUP - RENOVATION

201 GRISWOLDVILLE INDUSTRIAL BLVD
MACON, GEORGIA 31217

SEAL:

GEORGIA REGISTERED PROFESSIONAL ENGINEER No. 034608 JENNIFER DUCHAC

DRAWN:	CHECKED:
AB	JD
APPROVED:	ISSUE DATE:
JCA	07/07/25

CAD FILE NAME: 25022.dwg

SHEET TITLE: PHASE 1 FLOOR PLAN

PROJECT NUMBER: 25022.1

SHEET NO: M100

ISSUED FOR CONSTRUCTION

PLOT DATE: 7/15/2025 10:29:48 AM

ABBREVIATIONS

AAV	AIR ADMITTANCE VALVE	IMB	ICE MACHINE BOX
A/C	ABOVE CEILING	IE	INVERT ELEVATION
A/F	ABOVE FLOOR	IWH	INSTANTANEOUS WATER HEATER
AFF, AFG	ABOVE FINISHED FLOOR/GRADE	L, LAV	LAVATORY
B/F, B/G	BELOW FLOOR/GRADE	MBH	1000 BTU/HR
BFP	BACKFLOW PREVENTER	MS	MOP SINK
CD	CONDENSATE DRAIN	MV	MIXING VALVE
CONT	CONTINUATION	O/H	OVERHEAD
CW	COLD WATER	G	NATURAL GAS
DN	DOWN	PD	PUMPED DISCHARGE
ET	EXPANSION TANK	PRV	PRESSURE REDUCING VALVE
EWC	ELECTRIC WATER COOLER	RP	RECIRCULATION PUMP
ex.	EXISTING	S, SAN	SANITARY
FCO	FLOOR CLEANOUT	SH	SHOWER
FD	FLOOR DRAIN	SK	SINK
FHB	FREEZEPROOF HOSE BIBB	TP	TRAP PRIMER
FS	FLOOR SINK	TYP	TYPICAL
FRH	FREEZEPROOF ROOF HYDRANT	UR	URINAL
FWH	FREEZEPROOF WALL HYDRANT	V	VENT
GCO	GRADE CLEANOUT	VTR	VENT THROUGH ROOF
GI	GREASE INTERCEPTOR	WC	WATER CLOSET
HB	HOSE BIBB	W.C.	WATER COLUMN
HD	HUB DRAIN	WCO	WALL CLEANOUT
HW	HOT WATER	WHA	WATER HAMMER ARRESTER
HWR	HOT WATER RETURN	WMB	WASHING MACHINE BOX

LEGEND

	COLD WATER PIPE
	HOT WATER PIPE
	HOT WATER RETURN PIPE
S	SANITARY PIPE
	VENT PIPE
GW	GREASE WASTE PIPE
F	FIRE SPRINKLER PIPE
IW	INDIRECT WASTE PIPE
PD	PUMPED DISCHARGE
FW	FILTERED WATER PIPE
	PIPE UP / PIPE DOWN
	PIPE TEE FROM TOP / TEE FROM BOTTOM
	PIPE CAP / PIPE CONTINUATION
	DIRECTIONAL FLOW ARROW
	BALL VALVE / CHECK VALVE
	MIXING VALVE / PRESSURE REDUCING VALVE
	BACKFLOW PREVENTER ASSEMBLY
	WALL HYDRANT / HOSE BIBB
	FLOOR DRAIN / FLOOR SINK
	WATER HAMMER ARRESTOR
	GAS COCK / GAS SOLENOID VALVE
	P-TRAP
	HUB DRAIN
	TRAP PRIMER
	FLOOR CLEANOUT / GRADE CLEANOUT
	VENT THROUGH ROOF
	PIPE CLEANOUT / WALL CLEANOUT

SPECIFICATIONS

GENERAL
ALL WORK SHALL COMPLY WITH ALL STATE, CITY AND LOCAL CODES, RULES AND REGULATIONS. CONTRACTOR SHALL SECURE ALL REQUIRED PERMITS AND INSPECTIONS ASSOCIATED WITH THIS WORK, AND SHALL PAY ALL COSTS AND FEES INVOLVED.

ALL WORK SHALL BE INSTALLED IN ACCORDANCE WITH THE BEST RECOGNIZED PRACTICE IN THE FIELD CONCERNED. MANUFACTURED ITEMS SHALL BE INSTALLED IN STRICT ACCORDANCE WITH THE MANUFACTURER'S PRINTED DIRECTIONS, SPECIFICATIONS AND RECOMMENDATIONS.

CONTRACTOR SHALL REVIEW ALL CONTRACT DOCUMENTS AND SHALL BE FAMILIAR WITH THE SCOPE AND REQUIREMENTS OF THIS PROJECT. ANY DISCREPANCIES OR LACK OF CLARITY IN THE DOCUMENTS SHALL BE IDENTIFIED TO THE ARCHITECT OR ENGINEER PRIOR TO THE SUBMISSION OF PRICING BIDS. WITH A SUBMITTED BID, CONTRACTOR IS ACCEPTING THESE DOCUMENTS AS SUFFICIENT DEFINITION OF THE SCOPE OF WORK, AND ANY ADDITIONAL COSTS BASED ON UNCLARITY OF CONTRACT DOCUMENTS WILL NOT BE CONSIDERED.

CONTRACTOR SHALL VERIFY ALL DIMENSIONS AND LOCATIONS FOR EQUIPMENT INSTALLATION PRIOR TO THE SUBMITTAL OF SHOP DRAWINGS. ALL EQUIPMENT AND DEVICES SHALL BE INSTALLED SUCH THAT THEY ARE EASILY ACCESSIBLE AND SERVICABLE. THIS EQUIPMENT INCLUDES, BUT IS NOT LIMITED TO: PLUMBING FIXTURES, WATER HEATERS, EXPANSION TANKS, PUMPS, BACKFLOW PREVENTERS, VALVES, MIXING VALVES, THERMOMETERS, GAUGES, TRAP PRIMERS AND CLEANOUTS.

THE CONTRACTOR IS RESPONSIBLE FOR REVIEWING THE FULL SET OF CONSTRUCTION DOCUMENTS, INCLUDING ARCHITECTURAL, STRUCTURAL, CIVIL, MECHANICAL & ELECTRICAL DRAWINGS (AS APPLICABLE) TO ENSURE ALL PLUMBING WORK IS COORDINATED WITH PHYSICAL CONDITIONS AND ALL OTHER TRADES.

THE CONTRACTOR IS RESPONSIBLE FOR REVIEWING THE ARCHITECTURAL DRAWINGS TO ENSURE THERE IS ADEQUATE WALL THICKNESS SUCH THAT ALL PIPING, FIXTURE CARRIERS, WALL CLEANOUTS, WALL BOXES, WALL HYDRANTS AND ACCESS PANELS WILL FIT IN THE WALL SPACE. CONTRACTOR SHALL NOTIFY THE ARCHITECT IF WALL SPACE IS INADEQUATE PRIOR TO COMMENCING WORK.

THE CONTRACTOR SHALL OBTAIN EXACT WALL, FIXTURE, AND LAYOUT DIMENSIONS FROM THE ARCHITECTURAL DRAWINGS. THE CONTRACTOR IS RESPONSIBLE FOR OBTAINING ROUGH-IN AND INSTALLATION DRAWINGS FOR ALL PLUMBING FIXTURES, KITCHEN EQUIPMENT AND OWNER FURNISHED EQUIPMENT (AS APPLICABLE), AND SHALL COORDINATE THE PLUMBING INSTALLATION PRIOR TO COMMENCING THE WORK. THE CONTRACTOR IS RESPONSIBLE FOR PROVIDING AND INSTALLING ALL NECESSARY VALVES, CONNECTIONS, TRAPS, ACCESS PANELS, UNIONS, ESCUTCHEONS, WATER HAMMER ARRESTORS, VACUUM BREAKERS, RELIEF VALVES, PIPE INSULATION, AND EQUIPMENT SPECIALTY DEVICES AS REQUIRED TO FACILITATE COMPLETE AND OPERATIONAL CONDITIONS WHICH ARE IN STRICT COMPLIANCE WITH THE MANUFACTURER'S INSTALLATION INSTRUCTIONS.

THESE DRAWINGS ARE DIAGRAMMATIC AND DO NOT REFLECT ALL POSSIBLE PHYSICAL CONDITIONS. REFER TO ARCHITECTURAL DRAWINGS FOR ALL DIMENSIONS AND EXACT LOCATIONS OF EQUIPMENT AND FIXTURES. PROVIDE NECESSARY PIPING OFFSETS TO COORDINATE WITH THE BUILDING STRUCTURE, WORK OF OTHER TRADES, AND CONNECTION TO SITE UTILITIES (AS APPLICABLE).

COORDINATE THE ELECTRICAL REQUIREMENTS AND CHARACTERISTICS OF ALL PLUMBING EQUIPMENT WITH THE ELECTRICAL CONTRACTOR PRIOR TO ISSUING SUBMITTALS OR PURCHASING EQUIPMENT.

UNLESS NOTED OTHERWISE, ALL DRAINAGE PIPING SHALL BE SLOPED AT A MINIMUM OF 1/4" PER FOOT. 2" SANITARY PIPING AND ALL GREASE WASTE PIPING SHALL BE SLOPED AT 1/4" PER FOOT.

DOMESTIC WATER PIPING SHALL BE PURGED OF DELETERIOUS MATTER AND DISINFECTED PRIOR TO UTILIZATION. PIPING TO BE FLUSHED AND STERILIZED IN ACCORDANCE WITH IPC 610.1 AND ALL APPLICABLE LOCAL AND STATE HEALTH DEPARTMENT STANDARDS.

ALL DOMESTIC WATER PIPING, SANITARY P-TRAPS AND GREASE WASTE PIPING SUBJECT TO FREEZING SHALL BE INSULATED AND PROVIDED WITH HEAT TRACE. CONDENSATE PIPING SUBJECT TO FREEZING WITHIN WALK-IN FREEZERS SHALL BE INSULATED AND PROVIDED WITH HEAT TRACE. PIPING INSTALLED IN EXTERIOR WALLS SHALL BE WRAPPED IN 1" THICK PIPE INSULATION AND BE LOCATED ON THE INTERIOR SIDE OF THE BUILDING INSULATION. IF INSTALLED IN EXTERIOR BLOCK WALLS, INTERSTITIAL SPACES SHALL BE FILLED WITH FOAM INSULATION.

IN CONCEALED LOCATIONS WHERE PIPING, OTHER THAN CAST-IRON OR GALVANIZED STEEL, IS INSTALLED THROUGH HOLES OR NOTCHES IN STUDS, JOISTS, OR SIMILAR MEMBERS LESS THAN 1/2" FROM THE NEAREST EDGE OF MEMBER, PIPE SHALL BE PROTECTED BY STEEL SHIELD PLATES IN ACCORDANCE WITH IPC 305.6.

PIPE PENETRATIONS THROUGH FIRE RATED WALLS OR FLOORS SHALL HAVE EQUIVALENTLY RATED SLEEVES AND SHALL BE SEALED AND FIRE CAULKED WITH A U.L. LISTED FIRE STOPPING SYSTEM INSTALLED IN ACCORDANCE WITH THE MANUFACTURER'S LISTED DETAILS AND SPECIFICATIONS.

THE CONTRACTOR IS RESPONSIBLE FOR COORDINATING WITH THE REQUIREMENTS OF THE COUNTY HEALTH DEPARTMENT AND OTHER LOCAL AUTHORITIES HAVING JURISDICTION REGARDING CROSS CONNECTION CONTROL OR OBTAINING A FOOD SERVICE PERMIT (AS APPLICABLE). REPORT ANY OBSERVED DISCREPANCIES TO THE ARCHITECT OR ENGINEER PRIOR TO COMMENCING WITH THE WORK.

CONTRACTOR SHALL CONFIRM PLUMBING FIXTURE FINISHES WITH THE ARCHITECTURAL SCHEDULES & DETAILS (AS APPLICABLE).

PROFICIENT ENGINEERING WAIVES ANY AND ALL RESPONSIBILITY AND LIABILITY FOR PROBLEMS WHICH ARISE FROM FAILURE TO FOLLOW THESE PLANS, SPECIFICATIONS AND THE DESIGN INTENT THEY CONVEY, OR PROBLEMS WHICH ARISE FROM OTHER'S FAILURE TO OBTAIN AND/OR FOLLOW PROFICIENT'S GUIDANCE WITH RESPECT TO ANY ERRORS, OMISSIONS, INCONSISTENCIES, AMBIGUITIES OR CONFLICTS WHICH ARE ALLEGED. THE DRAWINGS ARE GENERALLY DIAGRAMMATIC IN NATURE.

SUBMITTALS
FURNISH SHOP DRAWINGS FOR MANUFACTURED PRODUCTS. ALL ITEMS SHALL BE CLEARLY MARKED TO MATCH EQUIPMENT MARKS ON THE PLUMBING DRAWINGS. ALL OPTIONS MUST BE CLEARLY MARKED ON THE SUBMITTAL SHEET. A MODEL NUMBER LISTING ON A COVER SHEET IS NOT AN ACCEPTABLE SUBSTITUTE FOR MARKING THE ACTUAL SUBMITTAL SHEET. ELECTRICAL DATA FOR POWERED EQUIPMENT MUST BE INDICATED ON THE SUBMITTAL SHEET FOR THAT ITEM.

SUBMITTAL REVIEW IS CONSIDERED A GENERAL ACCEPTANCE OF THE BASIC APPLICABILITY OF THE EQUIPMENT. CONTRACTOR IS RESPONSIBLE FOR THE INSTALLATION AND/OR ALTERNATE ARRANGEMENT OF THE EQUIPMENT WITHIN A GIVEN SPACE. WHEN SUBSTITUTED EQUIPMENT IS INSTALLED, CONTRACTOR SHALL BE RESPONSIBLE FOR ANY COORDINATION OR ADDITIONAL COST BROUGHT ON BY THE USE OF THIS EQUIPMENT.

HANGERS AND SUPPORTS
HANGERS SHALL BE COMPLETE WITH RODS AND SUPPORTS PROPORTIONED TO THE SIZE OF PIPE TO BE SUPPORTED, IN ACCORDANCE WITH THE MANUFACTURER'S RECOMMENDATIONS.

SIZE HANGERS FOR INSULATED PIPING TO BEAR ON OUTSIDE OF INSULATION. PROVIDE INSULATION PROTECTORS AT HANGERS BEARING ON THE OUTSIDE OF INSULATION. PROVIDE A RIGID INSERT OR RIGID INSULATION AT EACH INSULATION PROTECTOR.

WHERE SEVERAL PIPES 2 1/2" AND SMALLER RUN PARALLEL AND IN THE SAME PLANE, THEY MAY BE SUPPORTED ON GANG OR MULTIPLE HANGERS. LARGER PIPING SHALL BE INDEPENDENTLY HUNG, RUN PARALLEL AND BE EQUALLY SPACED.

PIPING SHALL BE SUPPORTED IN ACCORDANCE WITH IPC SECTION 308, AND SPACING OF HANGERS SHALL NOT EXCEED THE LIMITS SET FORTH IN TABLE 308.5. PIPES SHALL BE SUPPORTED WITHIN 1'-0" OF EACH ELBOW.

VERTICAL PIPE SUBJECT TO MOVEMENT SHALL BE SUPPORTED FROM THE WALL BY MEANS OF A PIPE CLAMP.

SUPPORT DOMESTIC WATER PIPING IN SPACES BEHIND PLUMBING FIXTURES BY BRACKETS AND U-BOLTS SECURED TO WASTE AND VENT STACKS. SIZE U-BOLTS TO BEAR ON THE PIPING.

AFTER HANGER RODS ARE INSTALLED IN FINISHED CONCRETE CEILING, FILL THE REMAINING OPENING WITH CEMENT SO THAT NO HOLE SHOWS AT THE CEILING.

WHERE COPPER PIPING IS USED, NONFERROUS METAL SUPPORT(S) OR PROPER ISOLATION BETWEEN DISSIMILAR MATERIALS SHALL BE PROVIDED.

PIPE HANGERS AND SUPPORTS SHALL BE FURNISHED AND INSTALLED IN ACCORDANCE WITH RECOMMENDATIONS SET FORTH IN MANUFACTURER'S STANDARDIZATION SOCIETY STANDARD PRACTICES NO. SP-69 AND SP-58.

SLEEVES AND PENETRATIONS
SLEEVES SHALL BE PROVIDED WHERE PIPES PASS THROUGH WALLS, FLOORS AND ROOFS.
PROVIDE STANDARD WEIGHT STEEL SLEEVES IN CONCRETE AND MASONRY CONSTRUCTION, PROVIDE 26GA GALVANIZED SHEET METAL SLEEVES IN INTERIOR DRYWALL CONSTRUCTION. SLEEVES SHALL BE THE FULL THICKNESS OF WALLS AND SHALL ALLOW FOR THE FULL THICKNESS OF PIPE INSULATION, WHERE APPLICABLE.

SLEEVES MAY BE OMITTED WHEN OPENINGS ARE CORE DRILLED FOR CONCEALED VERTICAL AND HORIZONTAL PIPING. SLEEVES ARE NOT REQUIRED AT INDIVIDUAL PLUMBING FIXTURES OR IN CONCRETE FLOOR SLABS ON GRADE, UNLESS OTHERWISE NOTED.

SLEEVES FOR ALL PIPING PENETRATING FIRE RATED WALLS AND FLOORS SHALL BE PROVIDED WITH 3M PIPE BARRIER NO. CP-25 FIRE PROOFING CAULKING, OR EQUAL, IN ANNULAR SPACE BETWEEN SLEEVE AND PIPING. CONTRACTOR SHALL VERIFY THE RATING OF THE WALL AND CONFIRM THE PENETRATION PROTECTION PROVIDED MEETS THAT RATING.

PENETRATIONS THROUGH OUTSIDE WALLS SHALL BE WATERTIGHT. CAULK BETWEEN PLUMBING PIPE AND SLEEVE. PACK WITH FIBERGLASS AND CAULK, 1" DEEP AT EACH FACE WITH NON-HARDENING SEALANT BETWEEN PIPE AND SLEEVE.

IN EXTERIOR WALLS AND BEARING PARTITIONS, WOOD STUDS ARE PERMITTED TO BE CUT OR NOTCHED TO A DEPTH NOT EXCEEDING 25 PERCENT OF THE WIDTH OF THE STUD. CUTTING OR NOTCHING OF STUDS TO A DEPTH NOT GREATER THAN 40 PERCENT OF THE WIDTH OF THE STUD IS PERMITTED IN NONBEARING PARTITIONS NOT SUPPORTING LOADS OTHER THAN THE WEIGHT OF THE PARTITION.

BORED HOLES NOT GREATER THAN 40 PERCENT OF THE STUD WIDTH ARE PERMITTED TO BE BORED IN ANY WOOD STUD. BORED HOLES NOT GREATER THAN 60 PERCENT OF THE STUD WIDTH ARE PERMITTED IN NONBEARING PARTITIONS IN ANY WALL WHERE EACH BORED STUD IS DOUBLED, PROVIDED THAT NOT MORE THAN TWO SUCH SUCCESIVE DOUBLED STUDS ARE SO BORED. THE EDGE OF A BORED HOLE SHALL NOT BE NEARER THAN 5/8 INCH (15.9 mm) TO THE EDGE OF THE STUD. BORED HOLES SHALL NOT BE LOCATED AT THE SAME SECTION OF STUD AS A CUT OR NOTCH.

SPECIFICATIONS

DOMESTIC WATER SYSTEMS AND ACCESSORIES

THE PRIMARY SPECIFICATION FOR DOMESTIC WATER PIPING SHALL BE AS FOLLOWS: WATER PIPING ABOVE FLOOR: TYPE 'L' HARD DRAWN COPPER TUBING, ASTM B88, WROUGHT SOLDER JOINTS, ANSI B16.22. WATER PIPING BELOW FLOOR: TYPE 'K SOFT DRAWN COPPER TUBING, WITH NO JOINTS BELOW SLAB, ASTM B88.

AS AN ALTERNATE TO THE PRIMARY SPECIFICATION FOR WATER PIPING, THE FOLLOWING MAY BE USED IN WHOLE OR IN PART. THE PLUMBING CONTRACTOR SHALL LIST EACH SYSTEM AS A SEPARATE LINE ITEM AS AN ALTERNATE FOR THE OWNER'S SELECTION. USE OF ANY ALTERNATE SHALL BE AT THE SOLE DISCRETION OF THE OWNER. SERVICE PIPING BELOW GRADE: CPVC (CHLORINATED POLYVINYL CHLORIDE) SCHEDULE 40 WHEN APPROVED BY THE AUTHORITY HAVING JURISDICTION. SHALL MEET ASTM D2846 AND ASTM F 441. HOT AND COLD WATER PIPING ABOVE FLOOR: CPVC (CHLORINATED POLYVINYL CHLORIDE) SCHEDULE 40 WITH SOLVENT WELD JOINTS WHEN APPROVED BY THE AUTHORITY HAVING JURISDICTION. PIPING SHALL MEET ASTM D 2848 AND SHALL BE CERTIFIED BY THE NSF INTERNATIONAL FOR USE WITH POTABLE WATER SYSTEMS. SOLVENT CEMENTS FOR CPVC PLASTIC PIPING SHALL MEET ASTM F437, ASTM F438 AND ASTM F439. WATER PIPING ABOVE FLOOR: CROSS-LINKED POLYETHYLENE (PEX) TUBING, SHALL COMPLY WITH ASTM F 876, ASTM F 877, CSA B137.5. HOT AND COLD WATER PIPING ABOVE FLOOR: CROSS-LINKED POLYETHYLENE (PEX) TUBING, SHALL COMPLY WITH ASTM F 876, ASTM F 877; CSA B137.5.

ALL DOMESTIC HOT WATER PIPING SHALL HAVE A MINIMUM PRESSURE RATING OF 100PSI AT 180°F.

DOMESTIC WATER PIPING SHALL BE TESTED IN ACCORDANCE WITH ALL GOVERNING CODES. PIPING SHALL BE PURGED OF DELETERIOUS MATTER AND DISINFECTED PRIOR TO UTILIZATION. PIPING TO BE FLUSHED AND STERILIZED IN ACCORDANCE WITH IPC 610.1 AND ALL APPLICABLE LOCAL AND STATE HEALTH DEPARTMENT STANDARDS.

BALL VALVES SHALL BE TWO-PIECE BRONZE BODY, LARGE PORT WITH SOLID, SMOOTH BORE CHROME PLATED BRASS BALL. SEATS SHALL BE REINFORCED TFE WITH TEFLON PACKING RING AND THREADED ADJUSTABLE PACKING NUT. PROVIDE STEM EXTENSION AS NEEDED TO PROVIDE HANDLE ON OUTSIDE OF PIPE INSULATION. VALVES SHALL BE APOLLO 70 OR EQUAL.

BACKFLOW PREVENTERS SHALL BE INSTALLED IN ACCESSIBLE LOCATIONS FOR EASE OF TESTING AND SERVICING. FOR BACKFLOW PREVENTERS WITH VENT CONNECTIONS, ROUTE VENT LINE TO NEAREST DRAIN AND DISCHARGE WITH AIR GAP. BACKFLOW PREVENTERS SHALL BE TESTED IN ACCORDANCE WITH IPC 312.10.2. CONTRACTOR SHALL PROVIDE CERTIFICATIONS THAT STATE DEVICES HAVE BEEN TESTED AND APPROVED.

THERMOMETERS SHALL BE 9" ADJUSTABLE ANGLE, 30°-180°F RANGE (TRERICE BX9 OR EQUAL). PRESSURE GAUGES SHALL BE 4 1/2" DIAL SIZE, 0-160PSI (TRERICE 600CB OR EQUAL).

CONTRACTOR SHALL FIELD VERIFY INCOMING DOMESTIC WATER PRESSURE TO CONFIRM ADEQUATE PRESSURE TO SERVE THE DOMESTIC WATER SYSTEM. CONTRACTOR SHALL ALERT ENGINEER TO A POTENTIAL LOW PRESSURE CONDITION. WHERE PRESSURE EXCEEDS 80PSI, PROVIDE PRESSURE REGULATING VALVE (WATTS LF223) AND UPSTREAM STRAINER (WATTS LSF777).

CONTRACTOR SHALL FIELD COORDINATE LOCATION OF ACCESSIBLE ISOLATION VALVES ON DOMESTIC HOT & COLD WATER SUPPLIES TO FIXTURES OR GROUPS OF FIXTURES SUCH THAT THEY MAY BE SHUT OFF FOR SERVICING. SERVICE AND HOSE BIBB VALVES SHALL BE IDENTIFIED. ALL OTHER VALVES INSTALLED IN LOCATIONS THAT ARE NOT ADJACENT TO THE FIXTURE(S) SHALL BE IDENTIFIED, INDICATING THE FIXTURE(S) SERVED.

RETURN AIR PLENUMS
ALL EXPOSED MATERIALS WITHIN RETURN AIR PLENUMS SHALL BE NONCOMBUSTIBLE OR HAVE A FLAME SPREAD INDEX OF NOT MORE THAN 25 AND A SMOKE-DEVELOPED INDEX OF NOT MORE THAN 50, AS DETERMINED IN ACCORDANCE WITH ASTM E84/UL723. COPPER AND CAST IRON PIPING IS APPROVED. THE CONTRACTOR IS RESPONSIBLE FOR COORDINATING ALL RETURN AIR PLENUM LOCATIONS WITH THE MECHANICAL CONTRACTOR.

INSULATION
INSULATE ALL DOMESTIC HOT WATER AND HOT WATER RECIRCULATION PIPING IN ACCORDANCE WITH IECC TABLE C403.2.10. PIPE UP TO 1 1/2": 1" THICK INSULATION. PIPE 1 1/2" OR LARGER: 1 1/2" THICK INSULATION

INSULATE ALL HORIZONTAL COLD WATER PIPING LOCATED ABOVE CEILING, VERTICAL PIPING LOCATED IN AN EXTERIOR WALL, EXPOSED PIPING (I.E. MECH ROOMS). PIPE UP TO 1": 1/2" THICK. PIPING 1 1/4" AND OVER: 1" THICK INSULATION. ALL WATER AND DRAINAGE PIPING INSTALLED IN EXTERIOR WALLS SHALL BE WRAPPED IN 1" THICK PIPE INSULATION AND BE LOCATED ON THE INTERIOR SIDE OF THE BUILDING INSULATION. IF INSTALLED IN EXTERIOR BLOCK WALLS, INTERSTITIAL SPACES SHALL BE FILLED WITH FOAM INSULATION.

ALL JOINTS SHALL BE SEALED WITH MATCHING VAPOR BARRIER TAPE.

INSULATION SHALL HAVE A K-FACTOR (AVERAGE THERMAL CONDUCTIVITY) NOT TO EXCEED 0.27 BTU-IN/HR x SQFT x °F.

PROTECTION OF PIPING
PIPING PASSING UNDER FOOTINGS OR THROUGH FOUNDATION WALLS SHALL BE PROVIDED WITH A SLEEVE TWO PIPE SIZES LARGER THAN THE PIPE. OPEN ENDS OF SLEEVES SHALL BE SEALED. PIPING PASSING THROUGH CONCRETE OR CINDER WALLS AND FLOORS OR OTHER CORROSIVE MATERIAL SHALL BE PROTECTED IN ACCORDANCE WITH IPC 305.1. ALL PIPING INSTALLED THROUGH HOLES OR NOTCHES IN STUDS, JOISTS, RAFTERS OR SIMILAR MEMBERS SHALL BE PROTECTED BY STEEL SHIELD PLATES IN ACCORDANCE WITH IPC 305.6. VERTICAL STACKS IN WOOD CONSTRUCTION SHALL BE PROTECTED FROM BUILDING SETTLING WITH COMPRESSION/EXPANSION FITTINGS AND PIPE CLAMPS INSTALLED PER MANUFACTURER'S RECOMMENDATIONS (FERNCO XJ SERIES OR EQUAL).

TANK TYPE WATER HEATERS
WATER HEATERS SHALL BE U.L. LISTED AND SHALL MEET OR EXCEED THE STANDBY LOSS REQUIREMENTS OF U.S. DEPT. OF ENERGY AND CURRENT EDITION OF ASHRAE/IESNA 90.1.

WATER HEATERS SHALL HAVE 150PSI WORKING PRESSURE AND BE EQUIPPED WITH EXTRUDED HIGH DENSITY ANODE ROD AND HIGH TEMPERATURE CUTOFF SWITCH. WATER HEATERS SHALL BE THERMOSTATICALLY CONTROLLED AND SET TO 120° UNLESS OTHERWISE NOTED. WATER HEATERS SHALL BE INSTALLED ON SUSPENDED PLATFORM, STEEL STAND OR CONCRETE PAD, AS INDICATED ON DRAWINGS.

WATER HEATERS SHALL HAVE A MINIMUM 3 YEAR LIMITED WARRANTY.

WATER HEATERS SHALL BE INSTALLED LEVEL AND PLUMB. FIELD COORDINATE EXACT WATER HEATER LOCATION. MAINTAIN MANUFACTURER'S RECOMMENDED CLEARANCES, AND INSTALL SUCH THAT CONTROLS AND DEVICES ARE ACCESSIBLE FOR SERVICING.

INSTALL SHUTOFF VALVES IN COLD WATER INLET AND HOT WATER OUTLET. INSTALL THERMOMETER ON HOT WATER OUTLET. WATER HEATER SHALL HAVE ASME RATED COMBINATION TEMPERATURE AND PRESSURE RELIEF VALVE IN TOP PORTION OF TANK (FACTORY OR FIELD INSTALLED). PIPE RELIEF VALVE OUTLET TO FLOOR DRAIN, MOP SINK, INDIRECT WASTE RECEPTOR OR TO EXTERIOR. MAINTAIN CONTINUOUS DOWNWARD PITCH TOWARD DISCHARGE LOCATION, AND PROVIDE AIR GAP AT DISCHARGE LOCATION. WHERE WATER HEATER DRAIN PAN IS INDICATED ON PLANS, ROUTE DRAIN TO SAME LOCATION AS RELIEF VALVE AND DISCHARGE WITH AIR GAP.

WASTE AND VENT PIPING SYSTEMS AND ACCESSORIES
SANITARY PIPING SHALL BE PVC SCHEDULE 40 SOLID WALL PIPE AND DWV FITTING SYSTEM.

PIPE AND FITTINGS SHALL BE MANUFACTURED FROM PVC COMPOUND WITH A CELL CLASS OF 12454 PER ASTM D-1784 AND CONFORM WITH NATIONAL SANITATION FOUNDATION (NSF) STANDARD 14. PIPE SHALL BE IRON PIPE SIZE (IPS) CONFORMING TO ASTM D-1785 AND ASTM D-2665. INJECTION MOLDED FITTINGS SHALL CONFORM TO ASTM D-2665. FABRICATED FITTINGS SHALL CONFORM TO ASTM F-1866. SOLVENT CEMENTS SHALL CONFORM TO ASTM D-2564. PRIMER SHALL CONFORM TO ASTM F-656. BURIED PIPE SHALL CONFORM TO ASTM D-2321.

WASTE AND VENT PIPING SHALL BE TESTED IN ACCORDANCE WITH THE GOVERNING CODES. AT A MINIMUM, WASTE PIPING SHALL BE TESTED WITH AT LEAST 10 FOOT OF WATER HEAD PRESSURE APPLIED.

ALL VENTS THROUGH ROOF SHALL BE LOCATED AT LEAST 10'-0" AWAY FROM ANY AIR INTAKE, EVAPORATIVE COOLER, OR ANY OTHER DEVICE THAT WOULD DRAW AIR FROM THE VENT. FLASH AROUND ALL PIPES PENETRATING THROUGH ROOF WITH STANDARD MANUFACTURED FLASHINGS. FLASHING SHALL BE SHEET METAL WITH RUBBER GASKETS AND SHALL EXTEND INTO ROOFING AND UP PIPE DISTANCES IN ACCORDANCE WITH THE LOCAL CODE.

NO DOUBLE COMBINATION FITTINGS MAY BE UTILIZED IN THE HORIZONTAL.

WHERE TWO HORIZONTAL PIPES (BACK-TO-BACK WATER CLOSETS OR TWO SANITARY BRANCHES) COMBINE IN THE VERTICAL, A DOUBLE COMBINATION WYE EIGHTH BEND FITTING SHALL BE INSTALLED. DOUBLE SANITARY TEE OR SANITARY CROSS IS NOT ACCEPTABLE.

WHERE DRAWINGS REQUIRE CONNECTION TO EXISTING SANITARY SEWER PIPING IN BUILDING, IT IS THE CONTRACTOR'S RESPONSIBILITY TO FIELD DETERMINE EXACT LOCATION, DEPTH AND DIRECTION OF FLOW PRIOR TO COMMENCING WORK. CONTRACTOR SHALL ALERT ARCHITECT/ENGINEER IF THERE IS A POTENTIAL ISSUE MAINTAINING PROPER SLOPE IN CONNECTING TO EXISTING, OR IF THERE IS A MORE DIRECT CONNECTION POSSIBLE. CONTRACTOR SHALL CONFIRM THAT ANY EXISTING PIPING TO BE REUSED IS CLEAN, FREE OF DEFECTS, ADEQUATELY SLOPED (1/4"/FT MINIMUM) AND THAT THERE ARE NO DIPS THAT COULD HOLD WATER. PROVIDE CAMERA SCOPING TO DOCUMENT THIS INFORMATION. CONTRACTOR SHALL ALERT ARCHITECT/ENGINEER OF ANY DEFICIENCIES.

PROFICIENT ENGINEERING
3150 Holcomb Bridge Road
Norcross, Georgia 30071
404.330.9798
PROJECT # 125614

STROUD AND COMPANY
427 8th Street · Macon, Ga 31201
478-743-5097

ALL Architecture, LLC
2052 CHRYSLER DRIVE NE, ATLANTA, GA 30345
TELEPHONE: (404) 316-2896
E-MAIL: INFO@ALLARCHLLC.COM

REVISIONS	
NO.	DATE

COPYRIGHT
THIS DRAWING AND ALL REPRODUCTIONS ARE COPYRIGHTED AND THE PROPERTY OF ALL ARCHITECTURE LLC AND MAY NOT BE USED IN ANY WAY WITHOUT THEIR PERMISSION.

PROJECT TITLE:
NATIONWIDE CONSTRUCTION GROUP - RENOVATION
201 GRISWOLDVILLE INDUSTRIAL BLVD
MACON, GEORGIA 31217

SEAL:
GEORGIA REGISTERED No. 039968 PROFESSIONAL ENGINEER MIKE ROELOFS

DRAWN: PG	CHECKED: MR
APPROVED: JCA	ISSUE DATE: 07/07/25

CAD FILE NAME: 25022.dwg

SHEET TITLE: GENERAL

PROJECT NUMBER: 25022.1

SHEET NO: P001

ISSUED FOR CONSTRUCTION

PLOT DATE: 7/15/2025 9:57:33 PM

PLATFORM MOUNTED ELECTRIC WATER HEATER WITH HOT WATER RECIRCULATION

NO SCALE

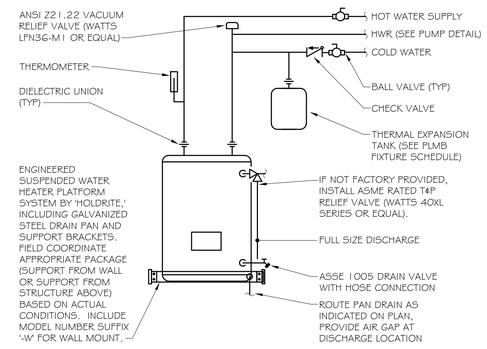

PROVIDE WORKING SPACE IN FRONT OF WATER HEATER AT LEAST 30 INCHES WIDE AND 30 INCHES DEEP

PROVIDE APPROPRIATE 'HOLDRITE' MODEL BASED ON SCHEDULED WATER HEATER VOLUME AND WATER HEATER DIAMETER

PRODUCT	GALLONS	MAXIMUM WEIGHT	PAN SIZE
#40 SWHP	6 to 20	375	21.25" X 21.25"
#50 SWHP	30 to 50	600	26.5" X 26.5"

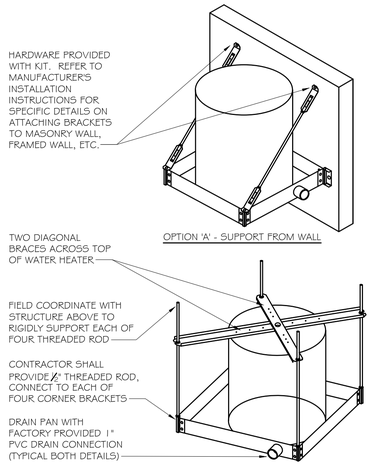

HOT WATER RECIRCULATION PUMP

NO SCALE

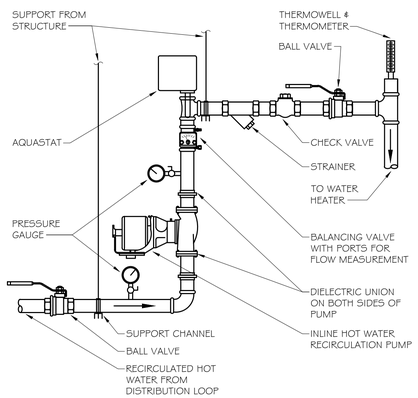

VENT THROUGH ROOF (VTR)

NO SCALE

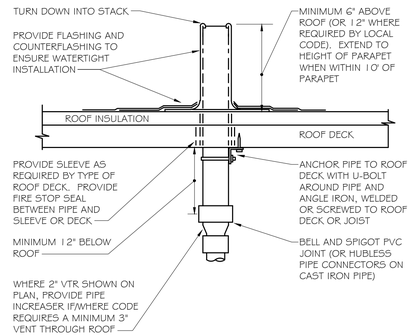

IT IS THE CONTRACTOR'S RESPONSIBILITY TO USE PROPER INSTALLATION METHODS TO ENSURE ROOF PENETRATION IS WATERTIGHT. LOCATE VTR MINIMUM FIFTEEN FEET (15'-0") HORIZONTAL FROM ANY FRESH AIR INTAKE, AND ONE FOOT FROM ANY VERTICAL SURFACE. LOCATE VTR MINIMUM 18" FROM PARAPET, EXPANSION JOINT, EQUIPMENT CURB, ETC. OFFSET IN CEILING SPACE WHERE REQUIRED TO MEET THESE CONDITIONS.

POINT OF USE MIXING VALVE

NO SCALE

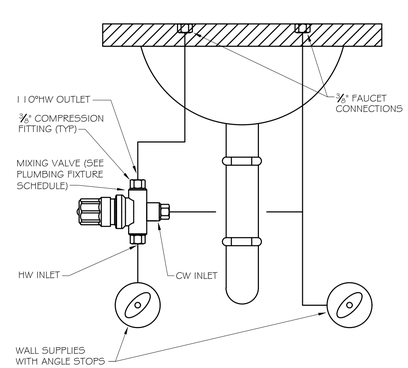

PLUMBING FIXTURE SCHEDULE

MARK	DESCRIPTION	WASTE RUNOUT	WASTE CONN.	VENT	WATER RUNOUT		WATER CONN.		SPECIFICATION
					CW	HW	CW	HW	
L-1	LAVATORY (ADA) - WALL HUNG	2"	1 1/2"	2"	1/2"	1/2"	3/8"	3/8"	WALL HUNG LAVATORY (AMERICAN STANDARD "LUCERNE," 0355.012) WITH CONCEALED ARM CARRIER MOUNTING (ZURN Z1231). PROVIDE 0.5GPM SINGLE HANDLE FAUCET WITH POLISHED CHROME FINISH (DELTA 501LF-HGMHDF). HANDICAP DRAIN OFFSET W/GRID DRAIN (ZURN Z8746-PC) AND CHROME PLATED P-TRAP (ZURN Z8701-PC). CHROME PLATED BRASS ANGLE SUPPLY STOPS WITH FLEX SUPPLIES (MCGUIRE 1165). INSULATE OFFSET, TRAP AND SUPPLY LINES (TRUEBRO "LAVGUARD," #103 E-Z). PROVIDE THERMOSTATIC MIXING VALVE TO TEMPER HOT WATER TO 110 DEGREES (LEONARD 170-LF). LEAD FREE, ASSE 1070.
WC-1	WATER CLOSET - TANK TYPE	4"	3"	2"	1/2"	---	1/2"	---	FLOOR MOUNTED, TANK TYPE WATER CLOSET (AMERICAN STANDARD "CADET PRO," 2155A104.020), 1.28 GPF, WHITE VITREOUS CHINA, GRAVITY FED FLUSH ACTION. TOP OF RIM AT 15" AFF. HIGH EFFICIENCY 'WATERSENSE' LISTED. PROVIDE HEAVY DUTY OPEN FRONT SEAT, LESS COVER, WITH SELF-SUSTAINING CHECK HINGE (BEMIS 1055SSC). CHROME PLATED BRASS ANGLE SUPPLY STOP WITH 12" LONG X 3/8" FLEX SUPPLY (MCGUIRE M166).
WC-2	WATER CLOSET (ADA) - TANK TYPE	4"	3"	2"	1/2"	---	1/2"	---	FLOOR MOUNTED, ADA TANK TYPE WATER CLOSET (AMERICAN STANDARD "CADET PRO RIGHT HEIGHT," 2155AA104.020), 1.28 GPF, WHITE VITREOUS CHINA, GRAVITY FED FLUSH ACTION. TOP OF RIM AT 16.5" AFF. HIGH EFFICIENCY 'WATERSENSE' LISTED. PROVIDE ALTERNATE TANK CONFIGURATION WITH TRIP LEVER ON RIGHT HAND SIDE IF NECESSARY TO HAVE LEVER ON OPEN SIDE OF WATER CLOSET. HEAVY DUTY OPEN FRONT SEAT, LESS COVER, WITH SELF-SUSTAINING CHECK HINGE (BEMIS 1055SSC). CHROME PLATED BRASS ANGLE SUPPLY STOP WITH 12" LONG X 3/8" FLEX SUPPLY (MCGUIRE M166).
UR-1	URINAL - HIGH EFFICIENCY, WALL MOUNTED W/FLUSH VALVE	2"	2"	2"	1"	---	3/4"	---	WALL MOUNTED, FLUSH VALVE URINAL (AMERICAN STANDARD "WASHBROOK," 6590.001), 0.5 GPF, WHITE VITREOUS CHINA. HIGH EFFICIENCY 'WATERSENSE' LISTED. PROVIDE ZURN 1222 SUPPORT SYSTEM. COORDINATE MOUNTING HEIGHT(S) AND ADA DESIGNATIONS WITH ARCHITECTURAL DRAWINGS. PROVIDE CHROME PLATED URINAL FLUSHOMETER, 0.5 GPF (AMERICAN STANDARD "FLOWISE" 6045.051.002).
EWC-1	WATER COOLER (ADA) - BI-LEVEL, WITH BOTTLE FILLER	2"	1 1/2"	2"	1/2"	---	1/2"	---	BI-LEVEL ADA WATER COOLER WITH BOTTLE FILLING STATION, INTEGRAL WATER FILTER & VISUAL DISPLAY TO INDICATE FILTER STATUS (ELKAY 'EZH20' LZSTLEWSLF). ORIFICES AT 38 3/8" AND 32 7/8" AFF. 8.0 GPH OF 50DEG WATER @ 80DEG INLET TEMP. PROVIDE ACCESSORY APRON (LKAFREZL) IF INSTALLED ON AN EXPOSED WALL FOR CANE DETECTION. MOUNT WITH WALL CARRIER (ZURN 1225-BL).
SK-1	STAINLESS STEEL SINK, DROP-IN, SINGLE BOWL (ADA)	2"	1 1/2"	2"	1/2"	1/2"	3/8"	3/8"	STAINLESS STEEL SINGLE BOWL DROP-IN SINK (ELKAY LRAD2521), 1 HOLE. BOWL DIMENSIONS: 21" L, 15.75" W, 6.5" D. ADA COMPLIANT 1.5 GPM FAUCET WITH PULL-OUT SPRAY (ELKAY LK5000), SINGLE HOLE MOUNTING (LESS ESCHUTCHEON PLATE). MCGUIRE CHROME PLATED P-TRAP W/ C.O., CHROME PLATED BRASS ANGLE SUPPLY STOPS, 12" LONG X 3/8" FLEX SUPPLIES. PROVIDE BASKET STRAINER (ZURN Z8741-SS).
MS-1	MOP SINK	3"	3"	2"	1/2"	1/2"	1/2"	1/2"	24"X24" FLOOR BASIN (FIAT MSB-2424) AND SERVICE FAUCET WITH VACUUM BREAKER, INTEGRAL STOPS, PAIL HOOK AND 3/4" HOSE THREAD ON SPOUT (830-AA). PROVIDE HOSE AND BRACKET (832-AA), MOP HANGER (869-CC), STAINLESS STEEL BUMPERGUARD (E-88-AA) AND STAINLESS STEEL WALL GUARD (MSG2424).
FD-1	FLOOR DRAIN - GENERAL PURPOSE	3"	3"	2"	---	---	---	---	GENERAL PURPOSE FLOOR DRAIN (J.R. SMITH #2005) WITH FLASHING COLLAR, ADJUSTABLE STRAINER HEAD & 5" ROUND NICKEL BRONZE REMOVABLE STRAINER. PROVIDE SQUARE REMOVABLE STRAINER FOR TILE APPLICATIONS. PROVIDE ASSE 1072 TRAP SEALER (ZURN Z1072).
FCO	FLOOR CLEANOUT	see plan	see plan	---	---	---	---	---	FLOOR CLEANOUT WITH CAST IRON BODY AND ADJUSTABLE NICKEL BRONZE TOP (J.R. SMITH 4031). CLEANOUT SIZE SHALL MATCH LINE SIZE.
WHA-X	WATER HAMMER ARRESTOR	---	---	---	see plan	---	see plan	---	WATER HAMMER ARRESTOR, ASSE 1010 (J.R. SMITH SERIES 5005-5050), 'X' IN 'WHA-X' REFERS TO PDI SIZE INDICATED ON DRAWINGS.
ET-1	POTABLE WATER EXPANSION TANK	---	---	---	3/4"	---	3/4"	---	LEAD-FREE POTABLE WATER EXPANSION TANK (WATTS PLT-5). 2.1 GALLONS TOTAL VOLUME, 0.8 GALLONS MAXIMUM ACCEPTANCE VOLUME. TANK SHALL BE PRE-CHARGED TO THE SYSTEM PRESSURE PRIOR TO INSTALLATION (CONTRACTOR TO FIELD-VERIFY).
WSB-1	WALL SUPPLY BOX	---	---	---	see plan	see plan	see plan	see plan	WALL SUPPLY BOX (OATEY #385xw386xx SERIES), 6"X6", LOW LEAD, 1/4 TURN BRASS VALVE WITH INTEGRAL FACTORY INSTALLED WATER HAMMER ARRESTOR. WHERE BOX IS TO BE INSTALLED IN FIRE RATED WALL, PROVIDE OATEY 391xx SERIES.

PRIOR TO SUBMITTAL OR PURCHASE, THE PLUMBING CONTRACTOR SHALL VERIFY FIXTURE SPECIFICATIONS WITH ARCHITECT/OWNER

ELECTRIC WATER HEATER SCHEDULE

MARK	TANK CAPACITY	RECOVERY	SETPOINT	ELECTRICAL	BASIS	TYPE
WH-1	20 GAL	15 GPH @ 80° RISE	120°	3.0 KW	A.O. SMITH DEL-20	LOWBOY

PRIOR TO SUBMITTAL OR PURCHASE, THE PLUMBING CONTRACTOR SHALL VERIFY THE APPROPRIATE ELECTRICAL CHARACTERISTICS OF THE SELECTED WATER HEATER. COORDINATE DIRECTLY WITH THE ELECTRICAL CONTRACTOR AND THE POWER PANEL SCHEDULES ON THE ELECTRICAL DRAWINGS.

RECIRCULATION PUMP SCHEDULE

MARK	ELECTRICAL	CAPACITY	NOTES	BASIS
RP-1	120v	4.0 GPM @ 10' HEAD	PROVIDE 24-HOUR TIMER. PROVIDE ADJUSTABLE AQUASTAT (HONEYWELL L6006 OR EQUAL).	ARMSTRONG ASTRO SERIES

PRIOR TO SUBMITTAL OR PURCHASE, THE PLUMBING CONTRACTOR SHALL VERIFY THE APPROPRIATE ELECTRICAL CHARACTERISTICS OF THE SELECTED PUMP. COORDINATE DIRECTLY WITH THE ELECTRICAL CONTRACTOR AND THE POWER PANEL SCHEDULES ON THE ELECTRICAL DRAWINGS.

CONTRACTOR SHALL INSTALL BALANCING VALVE AND SHALL ADJUST AS NEEDED TO ENSURE PUMP FLOW DOES NOT EXCEED 5 GPM

PROFICIENT ENGINEERING
3150 Holcomb Bridge Road
Norcross, Georgia 30071
404.330.9798
PROJECT # 125414

STROUD AND COMPANY
427 8th Street · Macon, Ga 31201
478-743-5097

ALL Architecture, LLC
2052 CHRYSLER DRIVE NE, ATLANTA, GA 30345
TELEPHONE: (404) 316-2896
E-MAIL: INFO@ALLARCHLLC.COM

REVISIONS	
NO.	DATE

COPYRIGHT
THIS DRAWING AND ALL REPRODUCTIONS ARE COPYRIGHTED AND THE PROPERTY OF ALL ARCHITECTURE & ALL MAY NOT BE USED IN ANY WAY WITHOUT THEIR PERMISSION.

PROJECT TITLE:
NATIONWIDE CONSTRUCTION GROUP - RENOVATION
201 GRISWOLDVILLE INDUSTRIAL BLVD
MACON, GEORGIA 31217

SEAL: GEORGIA REGISTERED No. 039968 PROFESSIONAL ENGINEER MIKE ROEDER

DRAWN: PG	CHECKED: MR
APPROVED: JCA	ISSUE DATE: 07/07/25

CAD FILE NAME: 25022.dwg

SHEET TITLE: SCHEDULES & DETAILS

PROJECT NUMBER: 25022.1

SHEET NO: P002

ISSUED FOR CONSTRUCTION

PLOT DATE: 7/15/2025 9:57:50 PM

WASTE/VENT ISOMETRIC

NO SCALE

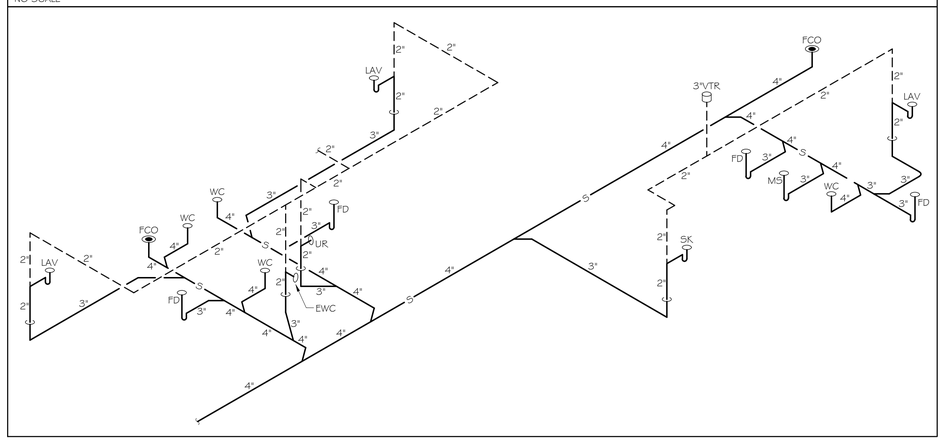

KEYNOTES

1. 2" V DN.
2. 2" V A/C & CONNECT TO EXISTING VENT PIPING. FIELD VERIFY EXACT LOCATION PRIOR TO COMMENCING WORK.
3. 3" V UP TO 3" VTR.
4. 4" S B/F & CONNECT TO EXISTING SANITARY PIPING IN BUILDING. FIELD VERIFY EXACT LOCATION, DEPTH AND DIRECTION OF FLOW PRIOR TO COMMENCING WORK.
5. 1/2" CW A/C & CONNECT TO EXISTING COLD WATER PIPING, FIELD VERIFY SIZE AND EXACT LOCATION.
6. 3/4" HWR TO RECIRCULATION PUMP, SEE DETAIL.
7. 3/4" CW, 3/4" HW & 3/4" HWR TO SHELF-MOUNTED WATER HEATER, SEE DETAIL.
8. 1/2" CW & 3/4" HW LOOP DN. ENSURE THAT HOT WATER LOOP EXTENDS SUCH THAT THE LAVATORY HOT WATER SUPPLIES ARE NO MORE THAN 24" FROM THE CIRCULATED LOOP IN COMPLIANCE WITH IECC.
9. 3/4" CW & 1/2" HW DN. TEE OFF 1/2" CW TO WATER CLOSET.
10. 1/2" CW & 1/2" HW DN.
11. 1/2" CW TO WSB-1, PROVIDE IN-LINE BACKFLOW PREVENTER (WATTS 'SD3,' ASSE 1022).
12. 1/2" CW DN.
13. 3/4" CW DN. 1/2" CW TO EACH WATER CLOSET.
14. 1" CW DN TO URINAL, PROVIDE WHA-A AT BASE OF DROP.
15. ROUTE WATER HEATER PAN DRAIN TO MOP SINK.

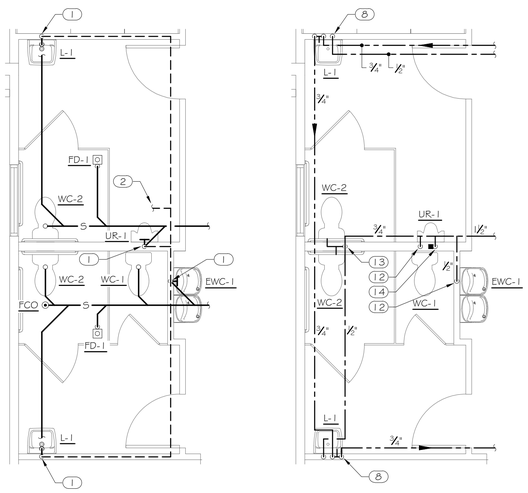

4&5 / P100 PHASE 1 ENLARGED FLOOR PLANS

SCALE: 1/4" = 1'-0"

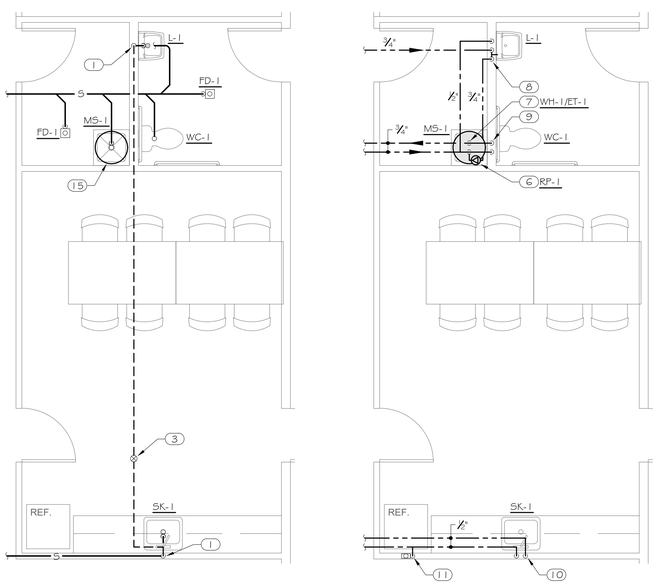

2&3 / P100 PHASE 1 ENLARGED FLOOR PLANS

SCALE: 1/4" = 1'-0"

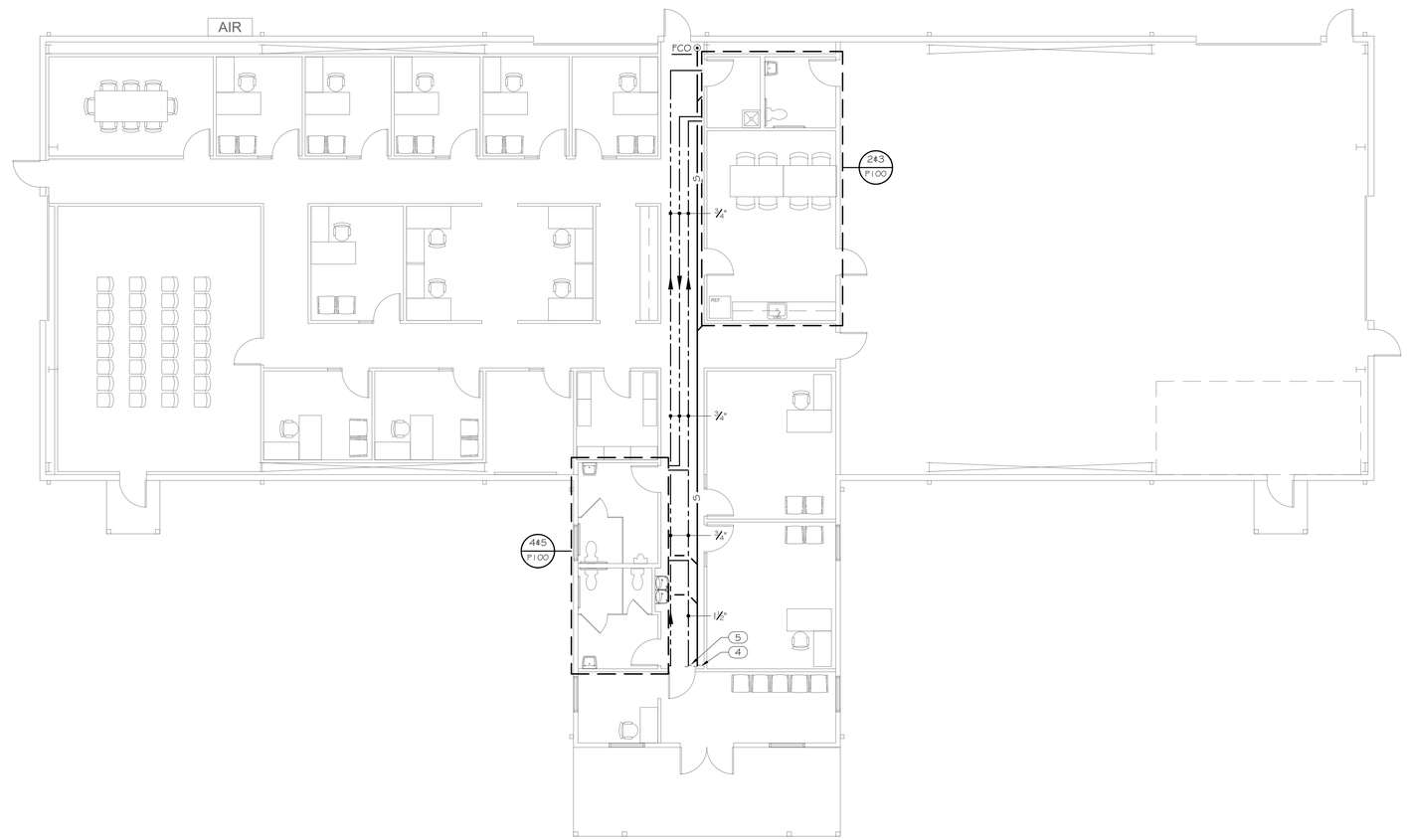

1 / P100 PHASE 1 FLOOR PLAN

SCALE: 1/8" = 1'-0"

PROFICIENT ENGINEERING
3150 Holcomb Bridge Road
Norcross, Georgia 30071
404.330.9798
PROJECT # 125414

STROUD AND COMPANY
427 8th Street · Macon, Ga 31201
478-743-5097

ALL Architecture, LLC
2052 CHRYSLER DRIVE NE, ATLANTA, GA 30345
TELEPHONE: (404) 316-2896
E-MAIL: INFO@ALLARCHLLC.COM

REVISIONS

NO.	DATE

COPYRIGHT
THIS DRAWING AND ALL REPRODUCTIONS ARE COPYRIGHTED AND THE PROPERTY OF ALL ARCHITECTURE LLC AND MAY NOT BE USED IN ANY WAY WITHOUT THEIR PERMISSION.

PROJECT TITLE:
NATIONWIDE CONSTRUCTION GROUP - RENOVATION
201 GRISWOLDVILLE INDUSTRIAL BLVD
MACON, GEORGIA 31217

SEAL:
GEORGIA REGISTERED PROFESSIONAL ENGINEER No. 035968 MIKE ROEDER

DRAWN: PG	CHECKED: MR
APPROVED: JCA	ISSUE DATE: 07/07/25

CAD FILE NAME: 25022.dwg

SHEET TITLE: PHASE 1 FLOOR PLANS

PROJECT NUMBER: 25022.1

SHEET NO: P100

ISSUED FOR CONSTRUCTION

PLOT DATE: 7/15/2025 9:57:56 PM

SPECIFICATIONS

GENERAL

CONTRACTOR SHALL REFER TO ALL RELATED DOCUMENTS, ARCHITECTURAL, STRUCTURAL, CIVIL AND MEP DRAWINGS, AND FULLY UNDERSTAND THE SCOPE OF WORK AND CONDITION OF CONSTRUCTION.

THE WORK UNDER THIS SPECIFICATIONS AND DRAWINGS SHALL INCLUDE ALL LABOR.

ALL INSTALLATION OF DEVICES AND CONNECTION OF CONDUCTORS SHALL BE PERFORMED BY LICENSED AND SKILLED ELECTRICIAN OR JOURNEYMAN.

ALL WORK SHALL BE COMPLETED TO THE SATISFACTION OF THE OWNER. IF ANY PORTION OF THE WORK IS FOUND UNSATISFACTORY BY THE OWNER, IT SHALL BE REMOVED AND REINSTALLED WITHOUT DELAY AT NO COST TO THE OWNER.

THE WORK INCLUDES, BUT NOT LIMITED TO:
- THE COMPLETE ELECTRICAL DISTRIBUTION SYSTEM.
- ROUGH-IN AND FINAL CONNECTIONS TO ALL DEVICES REQUIRING ELECTRICAL POWER, INCLUDING OWNER PROVIDED EQUIPMENT.
  - LIGHTING CONTROL
  - LIGHTING FIXTURES

EACH CONTRACTOR SHALL OBTAIN ALL PERMITS AND INSPECTIONS REQUIRED BY THE REGULATORY AUTHORITIES. ALL FEES RELATED TO OBTAINING PERMITS AND INSPECTION SHALL BE PAID FOR BY EACH CONTRACTOR IN HIS TRADE.

ALL MATERIALS AND WORKMANSHIP SHALL COMPLY WITH LOCAL, COUNTY, STATE, AND NATIONAL ELECTRICAL CODE 2023, SPECIFICATIONS, UTILITY COMPANY REQUIREMENTS AND ALL INDUSTRY STANDARDS.

ANY DIFFERENCES IN ABOVE MENTIONED REQUIREMENTS, THE MOST STERN SHALL OVERRULE ALL OTHERS.

IN ADDITION TO ABOVE MENTIONED CODES AND SPECIFICATIONS, THE FOLLOWING INDUSTRY STANDARDS SHALL BE COMPLIED IF THEY ARE MORE STRINGENT.
- IEEE
- IES
- IECC 2015
- ASHRAE 90.1
- NFPA
- NEMA
- UL
- ADA

THE MANUFACTURERS PUBLISHED DIRECTIONS SHALL BE FOLLOWED IN THE DELIVERY, STORAGE, PROTECTION, INSTALLATION AND WIRING OF ALL EQUIPMENT AND MATERIAL.

THE DRAWINGS SHOW DIAGRAMMATICALLY THE LOCATIONS OF THE VARIOUS LINES, CONDUITS, FIXTURES, AND EQUIPMENT AND THE METHOD OF CONNECTING AND CONTROLLING THEM. IT IS NOT INTENDED TO SHOW EVERY CONNECTION IN DETAIL AND ALL FITTINGS REQUIRED FOR A COMPLETE SYSTEM. THE SYSTEMS SHALL INCLUDE BUT ARE NOT LIMITED TO THE ITEMS SHOWN ON THE DRAWINGS. EXACT LOCATIONS OF THESE ITEMS SHALL BE DETERMINED BY REFERENCE TO THE GENERAL PLANS AND MEASUREMENTS AT THE BUILDING AND IN COOPERATION WITH THE OTHER SUBCONTRACTORS, AND IN ALL CASES, SHALL BE SUBJECT TO THE APPROVAL OF THE OWNER. THE OWNER RESERVES THE RIGHT TO MAKE ANY REASONABLE CHANGE IN THE LOCATION OF ANY PART OF THIS WORK WITHOUT ADDITIONAL COST TO THE OWNER.

CONTRACTOR SHALL SEEK APPROVAL FROM THE OWNER FOR ANY CHANGES TO THE SPECIFICATIONS OR CONTRACT DOCUMENTS.

ANY EXCEPTIONS, INCONSISTENCIES AND CONFLICTS IN CONTRACT DOCUMENTS, SPECIFICATIONS AND CONTRACT DOCUMENTS BY OTHER TRADE SHALL BE BROUGHT TO ATTENTION TO THE OWNER PRIOR TO BID.

CONTRACTOR SHALL COORDINATE AND VERIFY THE WORK WITH EXISTING CONDITIONS AND THE WORK OF OTHER TRADE PRIOR TO ANY FABRICATIONS OR INSTALLATION. IF THE LAYOUT OF THE DEVICES ON DRAWINGS ARE IMPRACTICAL TO THE CONDITION IN FIELD, CONTRACTOR SHALL NOTIFY THE OWNER IMMEDIATELY PRIOR TO ANY FABRICATION OR INSTALLATION.

ELECTRICAL DEVICES ARE INDICATED ON DRAWINGS AT APPROXIMATE LOCATIONS. THE OWNER RESERVE THE RIGHT TO MAKE REASONABLE CHANGES IN LOCATIONS WITHOUT ADDITIONAL COSTS.

THE LINES INDICATING BRANCH CIRCUITS DO NOT REPRESENT THE ROUTING OF ELECTRICAL CONDUITS. THEY INDICATE THE LAYOUT AND CONTROL OF CIRCUITS.

PRODUCTS AND WORK

MATERIALS FURNISHED SHALL BE NEW AND BY STANDARD MANUFACTURERS AND MUST CONFORM TO THE NATIONAL BOARD OF FIRE UNDERWRITER'S REQUIREMENTS AND BEAR THE UNDERWRITERS LABORATORIES' SEAL OF APPROVAL.

LISTED MANUFACTURERS, MODELS, OR CATALOGUE NUMBERS IN PART OR ALL SHALL ENTAIL TO INCLUDE THE PUBLISHED MANUFACTURER'S DESCRIPTION AND SPECIFICATION.

CONTRACTOR SHALL NOT INTERPRET THAT THE LISTED MANUFACTURERS IN SPECIFICATIONS OR DRAWINGS TO EXCLUDE ALL OTHER MANUFACTURERS.

CONTRACTOR SHALL MAKE CERTAIN THAT ALL EQUIPMENT FIT IN THE SPACE DESIGNATED AND DESIGNED FOR THE SURROUNDINGS IT OCCUPIES.

COMPLETE CATALOGUE ILLUSTRATION AND DESCRIPTIONS OF ALL EQUIPMENT SHALL BE SUBMITTED TO THE OWNER PRIOR TO ORDERING ANY EQUIPMENT.

ALL HORIZONTAL RUNS OF CONDUITS SHALL BE SUPPORTED BY MEANS OF APPROVED HANGER FROM THE STRUCTURAL CEILING.

COORDINATE THE WORK UNDER THIS SECTION WITH ALL OTHER TRADES.

CONDUITS AND RACEWAYS:

MANUFACTURERS: SQUARE D, B-LINE, ALLIED TUBE & CONDUIT, HOFFMAN, CARLON ELECTRICAL, WIREMOLD.

OUTDOORS EXPOSED: RIGID STEEL.
OUTDOORS CONCEALED ABOVE GROUND: RIGID STEEL.
OUTDOORS UNDERGROUND: TYPE EPC-40-PVC
OUTDOORS CONNECTION TO VIBRATING EQUIPMENT (INCLUDING TRANSFORMERS AND MOTOR DRIVEN EQUIPMENT): LFMC.
BOXES AND ENCLOSURES ABOVE GROUND: NEMA 3R UNLESS NOTED OTHERWISE ON PLANS.
INDOORS EXPOSED NOT SUBJECT TO PHYSICAL DAMAGE: EMT. INDOORS EXPOSED NOT SUBJECT TO SEVERE PHYSICAL DAMAGE: EMT.
INDOORS EXPOSED SUBJECT TO SEVERE PHYSICAL DAMAGE: RIGID STEEL CONDUIT.
INDOORS CONCEALED IN CEILINGS AND INTERIOR WALLS AND PARTITIONS: EMT.
INDOORS CONNECTION TO VIBRATING EQUIPMENT: FMC, EXCEPT USE LFMC IN DAMP OR WET LOCATIONS.
INDOORS DAMP OR WET LOCATIONS: IMC.
INDOORS LOW-VOLTAGE CABLES: EMT.

CONDUCTORS:

COPPER CONDUCTORS #10 AND SMALLER: LABELED PER UL 83, TYPE THHN/THWN, SOLID COPPER 600 VOLT INSULATION, UNIFORM COLOR CODED JACKET WITH JACKET DATA. METAL CLAD (TYPE MC) CABLE WHERE INSTALLED IN ACCORDANCE WITH NEC ARTICLE 330.

COPPER CONDUCTORS #8 OR LARGER: LABELED PER UL 83, TYPE THHN/THWN, STRANDED COPPER, 600VOLT INSULATION, UNIFORM COLOR CODED JACKET WITH JACKET DATA.

ACCEPTABLE MANUFACTURERS OF CONDUCTORS:

- PIRELLIE
- SOUTHWIRE
- AETNA
- REPUBLIC
- AFC
- ENCORE WIRE
- KERITE

CONTRACTOR MAY USE ALUMINUM CONDUCTORS FOR #4 AWG OR LARGER IN THE PLACE OF COPPER CONDUCTORS. CONTRACTOR SHALL REFER TO NEC TABLE 310-16 FOR EQUIVALENT AMPACITY AND SHALL COMPENSATE FOR VOLTAGE DROP.

CONTRACTOR SHALL MAKE ADEQUATE ADJUSTMENT TO CONDUIT SIZES INDICATED SHOULD ALTERNATIVE CONDUCTOR INSULATION OR MATERIAL BE UTILIZED.

SPECIFICATIONS

MOLDED CASE CIRCUIT BREAKER:

INCLUDE SCHEDULE OF ALL FUSES, RATINGS, TIME COORDINATION DATA, MANUFACTURER'S STANDARD DATA AND TIME-CURRENT CURVES. ALL DATA SHALL BE BASED ON TEST OF STANDARD PRODUCTS.

APPROVED MANUFACTURERS:
- GENERAL ELECTRIC
- CUTLER HAMMER
- SQUARE D
- SIEMENS

THERMAL-MAGNETIC BOLT-IN TYPE CIRCUIT BREAKERS WITH QUICK-MAKE, QUICK-BREAK CONTACTS; TRIP-FREE OPERATION WITH OVER-THE-CENTER TOGGLE HANDLE OR NON-REMOVABLE MONOLITHIC TIE-HANDLE.

MULTI-POLE BREAKERS SHALL HAVE INTERNAL COMMON TRIP AND COMMON RESET WITH A SINGLE TOGGLE HANDLE OR NON-REMOVABLE MONOLITHIC TIE-HANDLE.

TRIP RATINGS SHALL BE MOLDED ON THE HANDLE OR FACE OF BREAKER.

BREAKER TERMINALS SHALL BE RATED TO ACCOMMODATE A MINIMUM OF 75 DEGREE C. CONDUCTORS.

BREAKER SHALL BE RATED FOR MOUNTING AND OPERATION IN ANY POSITION; SHALL ACCOMMODATE AND MATCH THE TYPE OF TERMINATIONS REQUIRED.

SINGLE POLE BREAKERS RATED 15 AND 20 AMPERES SHALL BE UL LABELED AS "SWITCHING BREAKERS" AT THE APPLIED CIRCUIT VOLTAGE.

MULTI-POLE BREAKERS RATED 100 AMPERES AND LARGER SHALL BE MOLDED CASE THERMAL-MAGNETIC BOLT-IN TYPE BREAKER WITH ADJUSTABLE INSTANTANEOUS TRIP.

OVERCURRENT DEVICES RATED 1,000 AMPERES AND LARGER, SERVING LOADS GREATER THAN 150 VOLTS TO GROUND SHALL BE EQUIPPED WITH GROUND FAULT PROTECTION OF EQUIPMENT (GFPE) AS REQUIRED BY NEC ARTICLES 210.13 AND 230.95.

LIGHTING FIXTURE

SUBMITTAL:
SCHEDULE BY TYPE DESIGNATION ALL LIGHTING FIXTURES, EACH COMPLETE WITH DATA SHEET WITH COMPLETE PHYSICAL, ELECTRICAL AND LIGHTING CHARACTERISTICS, LAMP TYPE AND LAMP DATA.

REFER TO THE "LIGHTING FIXTURE SCHEDULE" \IN THE DRAWINGS FOR INDIVIDUAL FIXTURE DESCRIPTIONS AND MANUFACTURER TYPES.

PROVIDE LAMPS FOR EACH FIXTURE OF QUANTITY, TYPE AND COLOR AS LISTED IN LIGHTING FIXTURE SCHEDULE. GE, SYLVANIA OR PHILIPS ARE ACCEPTABLE.

EACH LIGHTING FIXTURE SHALL BE UL LABELED FOR PROPER OPERATION IN THE TYPE OF CEILING CONSTRUCTION AND FOR THE MOUNTING ARRANGEMENT ON\IN WHICH IT IS INSTALLED.

FIELD VERIFY ACTUAL CEILING SLOPE FOR FIXTURES INSTALLED IN SAME AND ACTUAL FIELD DIMENSIONS AND ANGLES OF CONSTRUCTION FOR ANY FIXTURE CONFORMING THE SHAPE AND LENGTH OF SAME, FOR COORDINATION OF FIXTURE CONSTRUCTION.

LIGHTING CONTROL

TIME SWITCHES:
SOLID STATE, PROGRAMMABLE, WITH ALPHANUMERIC DISPLAY; COMPLYING WITH UL 917. 20-A BALLAST LOAD, 120/240VAC.

TWO ON-OFF SET POINTS ON A 24-HOUR SCHEDULE AND ANNUAL HOLIDAY SCHDULE THAT OVERRIDES THE WEEKLY OPERATION ON HOLIDAYS.

ALLOW CONNECTION OF A PHOTOELECTRIC RELAY AS SUBSTITUTE FOR ON-OFF FUNCTION OF A PROGRAM.

BATTERY BACKUP FOR NOT LESS THAN SEVEN DAYS RESERVE TO MAINTAIN SCHEDULES AND TIME CLOCK.

INDOOR OCCUPANCY SENSORS:
WALL OR CEILING MOUNTED SOLID-STATE INDOOR OCCUPANCY SENSORS WITH A SEPARATE POWER PACK.

ADJUSTABLE TIME-DELAY OVER A RANGE OF 1 TO 30 MINUTES.

SENSOR OUTPUT: CONTACTS RATED TO OPERATE THE CONNECTED RELAY, COMPLYING WITH UL773A. SENSOR IS POWERED FROM POWER PACK.

POWER PACK: DRY CONTACTS RATED FOR 20-A BALLAST LOAD AT 120 OR 277 VAC. AUTOMATIC LIGHT-LEVEL SENSOR: ADJUSTABLE FROM 2 TO 200 FC (21.5 TO 2152 LUX); TURN LIGHTS OFF WHEN SELECTED LIGHTING LEVEL IS PRESENT.

DUAL SENSOR TYPE: DETECT OCCUPANCY AREA USING PIR (PASSIVE INFRA-RED) AND ULTRASONIC DETECTION METHOD.

GROUNDING AND BONDING

ALL GROUNDING AND BONDING SHALL CONFORM TO NEC ARTICLE 250.

COPPER WIRE OR CABLE INSULATED FOR 600V UNLESS REQUIRED BY APPLICABLE CODE OR AUTHORITIES HAVING JURISDICTION.

INSTALL SOLID CONDUCTOR FOR #8 AWG AND SMALLER AND STRANDED CONDUCTORS FOR #6 OR LARGER.

INSTALL INSULATED EQUIPMENT GROUNDING CONDUCTORS FOR ALL EQUIPMENT.

ELECTRICAL GENERAL NOTES

THE DESIGN OF THIS SET OF DOCUMENT IS BASED ON NEC 2023.

ELECTRICAL CONTRACTOR SHALL REFER TO ALL OTHER DESIGN DRAWINGS PRIOR TO BID AND RETAIN FULL UNDERSTANDING OF THE SCOPE OF WORK.

FIXTURE TYPE INDICATED BY UPPER CASE CHARACTERS, SWITCHING AND GROUPING DESIGNATED BY LOWER CASE LETTER AND CIRCUIT BY NUMBER (WHERE APPLICABLE).

REFER TO THE ARCHITECTURAL/INTERIORS REFLECTED CEILING PLANS FOR EXACT FIXTURE PLACEMENT AND DIMENSIONS.

REFER TO THE ARCHITECTURAL/INTERIORS DOCUMENTS FOR ACTUAL DEVICE LOCATIONS AND DIMENSIONS.

COORDINATE THE INSTALLATION OF ALL CEILING MOUNTED DEVICES (FIRE ALARM SYSTEM DEVICES AND SPEAKERS, SOUND SYSTEM SPEAKER, ETC.) TO BE SYMMETRICAL ABOUT LIGHT FIXTURES AND SPRINKLER HEADS. REFER TO THE ARCHITECTURAL REFLECTED CEILING PLAN. TYPICAL.

ALL MOUNTING OF EQUIPMENT IS AS SHOWN UNLESS OTHERWISE NOTED. COORDINATE WITH ARCHITECT THE COLOR/FINISHES OF ALL ELECTRICAL DEVICES, OUTLETS, COVERPLATES AND TRIM.

EMERGENCY BATTERY PACKS AND EXIT SIGNS SHALL BE CONNECTED AHEAD OF ANY SWITCHING DEVICES.

REFER TO MECHANICAL DRAWINGS FOR DUCT SMOKE DETECTOR LOCATIONS AND QUANTITIES OPERATION SHALL INCLUDE DUAL CONTACT BASE WITH LOCAL EQUIPMENT SHUTDOWN AND FIRE ALARM SIGNAL INITIATION.

WHEN CONDUCTOR OR CONDUIT SIZE IS INDICATED FOR BRANCH CIRCUIT HOME RUN, THE CONDUCTOR AND CONDUIT SIZE INDICATED SHALL BE USED FOR THE COMPLETE CIRCUIT.

REFER TO THE APPROPRIATE DRAWINGS FOR THE EXACT LOCATION AND REQUIREMENTS OF EQUIPMENT INSTALLED UNDER OTHER DIVISIONS OF THE DOCUMENTS, WHICH REQUIRE ELECTRICAL SERVICE.

EQUIPMENT GROUNDING CONDUCTORS SHALL BE INSTALLED IN ALL RACEWAYS.

WALL SWITCHES CONTROLLING CIRCUITS OF OPPOSITE PHASES SHALL NOT BE INSTALLED IN COMMON BOX UNLESS PERMANENT BARRIER IS PROVIDED.

ALL HOME RUNS SHALL RUN PARALLEL TO STRUCTURE AS MUCH AS POSSIBLE WHERE CEILING IS EXPOSED.

ALL RACEWAY AND EQUIPMENT SUPPORTS AND HANGERS SHALL BE FULLY COORDINATED WITH STRUCTURAL DRAWINGS TO INSURE LOCATION OF SAME OCCURS WITHIN FOUR (4) INCHES OF PANEL POINT ON BAR JOISTS.

COORDINATE LOCATION OF ALL FLOOR MOUNTED MECHANICAL AND PLUMBING EQUIPMENT IN ORDER TO VERIFY POWER & CONTROL RACEWAY CONCEALED IN SLABS TERMINATED AT PROPER LOCATION.

DISCONNECT SWITCHES, MOTOR STARTERS AND OTHER ELECTRICAL EQUIPMENT INSTALLED ABOVE ACCESSIBLE CEILINGS, AND REQUIRING ACCESS FOR MAINTENANCE, SHALL BE INSTALLED WITH BOTTOM OF DEVICE ONE (1) FOOT ABOVE CEILING TO PROVIDE READY ACCESSIBILITY.

MECHANICAL, PLUMBING, FIRE PROTECTION AND OTHER EQUIPMENT ARE SHOWN ON FLOOR PLAN IN APPROXIMATE LOCATION. COORDINATE WITH M, P, FP AND CONTRACT DRAWINGS/SUBMITTALS FOR EXACT LOCATION OF EQUIPMENT.

GENERAL DIAGRAMMATIC RACEWAY INTERCONNECTIONS OF EQUIPMENT, FIXTURES AND DEVICES ARE INDICATED ON FLOOR AND REFLECTED CEILING PLANS, REFER TO STRUCTURAL AND ARCHITECTURAL PLANS FOR ELEVATION CHANGES AND RACEWAY ROUTES.

RACEWAY FOR EXTERIOR LIGHTING MAY BE INDICATED OUTSIDE OF BUILDING FOOTPRINT FOR CLARITY. ROUTE ALL EXTERIOR LIGHTING RACEWAY WITHIN BUILDING STRUCTURE.

POWER AND COMMUNICATIONS/DATA CONDUITS CAN CROSS AT 90°, BUT WHERE PARALLEL, SHALL BE A MINIMUM OF 8" APART.

TELEVISION AND RADIO ANTENNAS CABLES SHALL HAVE SURGE PROTECTION. GROUND ALL MASTS.

FIELD COORDINATE MECHANICAL AND PLUMBING EQUIPMENT ELECTRICAL CHARACTERISTICS WITH DIV.15 CONTRACTOR PRIOR TO ROUGH-IN. ADJUST ELECTRICAL CONNECTIONS IF NECESSARY TO MATCH ACTUAL EQUIPMENT IN FIELD. FOR EXAMPLE, COORDINATE THE NAMEPLATE OVERCURRENT PROTECTION DEVICE RATING OF MECHANICAL EQUIPMENT AMONG MECHANICAL AND ELECTRICAL SUBCONTRACTORS. ADJUST CIRCUIT BREAKER TO MATCH NAMEPLATE RATING OF EQUIPMENT AT NO ADDITIONAL COST.

FIELD COORDINATE MECHANICAL AND PLUMBING EQUIPMENT REQUIREMENTS FOR ANY SUPPLEMENTAL POWER REQUIREMENTS, INCLUDING BUT NOT LIMITED TO CONTROL CIRCUITS. IT IS THE RESPONSIBILITY OF THE CONTRACTOR TO BRING ALL EQUIPMENT TO ITS INTENDED OPERATIONAL STATUS.

REFER TO FIRE PROTECTION DRAWINGS FOR LOCATIONS OF FLOW AND TAMPER SWITCHES.

EACH PENETRATION OF A FIRE RESISTANT RATED ASSEMBLY BY A PIPE, TUBE WIRE OR CONDUIT SHALL BE PROTECTED BY A THROUGH PENETRATION FIRE STOP SYSTEM THAT HAS BEEN TESTED ACCORDING TO ASTME 814 OR E199.

ELECTRIC RECEPTACLES, SWITCHES, OUTLETS, ETC. SHALL NOT BE INSTALLED BACK TO BACK ON FIRE RESISTANCE RATED WALLS. THEY SHALL BE AT LEAST 24-INCHES APART.

LIGHT SWITCHES AND ELECTRICAL OUTLETS, LOCATED IN ROOMS ACCESSIBLE TO THE DISABLED SHALL BE LOCATED NO HIGHER THAN 48 INCHES AND NO LOWER THAN 15 INCHES ABOVE THE FINISHED FLOOR SURFACE. IF THE REACH OR THE CONTROL IS OVER AN OBSTRUCTION, THE MINIMUM HEIGHT SHALL BE REACHED TO 44 INCHES FOR A FORWARD APPROACH OR 46 INCHES FOR A SIDE APPROACH.

REFER TO LOW VOLTAGE CONSULTANT'S DRAWINGS FOR VOICE, DATA AND CATV OUTLET LOCATIONS. REFER TO LV CONSULTANT'S DRAWINGS FOR ANY ADDITIONAL INFORMATION.

CONNECT ALL EXIT SIGNS TO NEAREST UNSWITCHED PORTION OF THE LIGHTING CIRCUIT IN THE AREA.

ELECTRICAL BOXES INSTALLED IN FIRE RATED WALLS SHALL MAINTAIN THE INTEGRITY OF THE RATED WALL.

SUPPORT ALL VERTICAL RACEWAY PER NEC TABLE 300.19(A).

MAKE ELECTRICAL CONNECTIONS TO ELECTRIC WATER COOLERS FROM GFCI PROTECTED OUTLET IN WALL BEHIND COOLER HOUSING. THE OUTLET AND CORD SHALL NOT BE VISIBLE FROM PUBLIC VIEW.

COORDINATE WITH CUTSHEETS OF ALL EQUIPMENT TO BE INSTALLED AND PROVIDE ADDITIONAL CIRCUITS FOR CONTROLS IF REQUIRED BY MANUFACTURER.

FINAL COLOR, FINISH AND OTHER AESTHETIC PORTIONS OF ALL DEVICES SHALL BE COORDINATED WITH ARCHITECT OR OWNER'S REPRESENTATIVE. THIS SET OF DRAWINGS DOES NOT SUPERCEDE ARCHITECTURAL OR INTERIOR DOCUMENTS.

ALL EXPOSED HORIZONTAL RUNS OF CONDUITS SHALL BE EITHER PARALLEL OR PERPENDICULAR TO EXTERIOR WALLS.

PROVIDE PLENUM RATED CABLES IF THE CABLES ARE EXPOSED AND ROUTED THROUGH PLENUM.

FOR ALL FUSES 1,200A OR HIGHER, PROVIDE ARC ENERGY REDUCTION PER NEC 240.67.

WHERE HIGHEST TRIP SETTING IN INSTALLED OVERCURRENT DEVICE IS 1,200A OR HIGHER, CONTRACTOR TO PROVIDE DOCUMENTATION OF CIRCUIT BREAKER(S) LOCATION AND PROVIDE AT LEAST ONE METHOD TO REDUCE CLEARING TIME VIA ENERGY-REDUCING MAINTENANCE SWITCH, INSTANTANEOUS TRIP SETTING, OR OTHER APPROVED METHOD AS LISTED PER NEC 240.87(B).

LEGEND

SYMBOLS	DESCRIPTION	TYPICAL MOUNTING HEIGHT UNLESS NOTED OTHERWISE
	DUPLEX RECEPTACLE, 120V, 20A, NEMA 5-20R	18" AFF
	DUPLEX RECEPTACLE, 120V, 20A, NEMA 5-20R	42" AFF OR 6" ABOVE COUNTER TOP
	QUADRAPLEX RECEPTACLE, 120V, 20A, NEMA 5-20R	18" AFF
AC	QUADRAPLEX RECEPTACLE, 120V, 20A, NEMA 5-20R	42" AFF OR 6" ABOVE COUNTER TOP
	DUPLEX RECEPTACLE, 120V, 20A, NEMA 5-20R	FLUSH WITH FINISHED FLOOR
	DUPLEX RECEPTACLE, 120V, 20A, NEMA 5-20R	IN CEILING
	SPECIAL RECEPTACLE, CONFIGURATION AND ELECTRICAL CHARACTERISTIC AS NOTED ON DWG	18" AFF
J	JUNCTION BOX FLUSH IN WALL WITH COVER. SIZE PER NEC.	18" AFF
J	JUNCTION BOX FLUSH IN CEILING WITH COVER. SIZE PER NEC.	IN CEILING
J	JUNCTION BOX FLUSH IN FINSHED FLOOR WITH COVER. SIZE PER NEC.	FLUSH WITH FINISHED FLOOR
$	SWITCH	42" AFF
$3 / $3	SWITCH - 3 WAY	42" AFF
¢ / $OS	SWITCH - WALL MTD, INTEGRAL OCCUPANCY SENSOR	42" AFF
$LV	SWITCH - WALL MTD, LOW VOLTAGE, PILOT LIGHT	42" AFF
$ / $D	SWITCH - WALL MTD, DIMMING	42" AFF
OS	SWITCH - CEILING MOUNTED OCCUPANCY SENSOR	IN CEILING
TV	TV OUTLET	18" AFF
	TELEPHONE OUTLET	18" AFF
	TELEPHONE OUTLET. SUBSCRIPT: F - FIREMAN'S PHONE, H - HOUSE PHONE, P - PAY PHONE	42" AFF OR 6" ABOVE COUNTER TOP
	TELEPHONE / DATA COMBINATION OUTLET	18" AFF
	TELEPHONE / DATA COMBINATION OUTLET	FLUSH WITH FINISHED FLOOR
	TELEPHONE / DATA COMBINATION OUTLET	42" AFF OR 6" ABOVE COUNTER TOP
	DATA OUTLET	18" AFF
	DATA OUTLET	42" AFF OR 6" ABOVE COUNTER TOP
P	DISCONNECT SWITCH. SUBSCRIPT: AMP / # OF POLES / ENCLOSURE	AS INDICATED ON DWG
F	FUSED DISCONNECT SWITCH. SUBSCRIPT: AMP / # OF POLES / ENCLOSURE / FUSE	AS INDICATED ON DWG
	ELECTRICAL PANELBOARD. REFER TO PANELBOARD SCHEDULE.	SURFACE MOUNTED ON WALL
	EQUIPMENT AS NOTED ON DRAWING.	SURFACE MOUNTED ON WALL
M	MOTOR	
XX-#	HOME RUN WITH WIRE TICKS. XX - PANEL DESIGNATION, # - CIRCUIT DESIGNATION. WIRE TICKS - (1) NEUTRAL, (3) HOT & (1) GROUND	
D / D	SMOKE DETECTOR. CEILING / WALL MOUNTED	
H / H	HEAT DETECTOR. CEILING/WALL MOUNTED	
	FIRE ALARM NOTIFICATION DEVICE. AUDIO AND VISUAL.	80" AFF
	FIRE ALARM NOTIFICATION DEVICE. AUDIO.	80" AFF
	FIRE ALARM NOTIFICATION DEVICE. VISUAL.	80" AFF
	FIRE ALARM INITIATION DEVICE. PULL STATION.	42" AFF

ABBREVIATIONS

AC	6" ABOVE COUNTER SPACE OR 42" AFF	IG	ISOLATED GROUND
AF	AMP FUSE	ISC	SHORT CIRCUIT CURRENT
AFF	ABOVE FINISHED FLOOR	LTG	LIGHTING
AL	ALUMINUM	MTD	MOUNTED
BFC	BELOW FINISHED CEILING	N	NEUTRAL
BKR	BREAKER	NL	NIGHT LIGHT
CND	CONDUIT	NEC	NATIONAL ELECTRICAL CODE
CONN	CONNECTED OR CONNECTION	PNL	PANEL
CTB	CABLE TV TERMINAL BACKBOARD	RECPT	RECEPTACLE
CU	COPPER	SPD	SURGE PROTECTIVE DEVICE
DN	DOWN	TEL	TELEPHONE
EC	EMPTY CONDUIT	TTB	TELEPHONE TERMINAL BOARD
ELEC	ELECTRICAL	TV	TELEVISION
FACP	FIRE ALARM CONTROL PANEL	TYP	TYPICAL
FAA	FIRE ALARM ANNUNCIATOR PANEL	XFMR	TRANSFORMER
G OR GRND	GROUND	UG	UNDERGROUND
GFCI OR GF	GROUND FAULT CIRCUIT INTERRUPTER	WP	WEATHERPROOF

PROFICIENT ENGINEERING
3150 Holcomb Bridge Road
Norcross, Georgia 30071
404.330.9798
PROJECT # 125414

STROUD AND COMPANY
427 8th Street · Macon, Ga 31201
478-743-5097

ALL Architecture, LLC
2052 CHRYSLER DRIVE NE, ATLANTA, GA 30345
TELEPHONE: (404) 316-2896
E-MAIL: INFO@ALLARCHLLC.COM

REVISIONS

NO.	DATE

COPYRIGHT
THIS DRAWING AND ALL REPRODUCTIONS ARE COPYRIGHTED AND THE PROPERTY OF ALL ARCHITECTURE LLC & MAY NOT BE USED IN ANY WAY WITHOUT THEIR PERMISSION.

PROJECT TITLE:
NATIONWIDE CONSTRUCTION GROUP - RENOVATION
201 GRISWOLDVILLE INDUSTRIAL BLVD
MACON, GEORGIA 31217

SEAL:
GEORGIA REGISTERED No. 032547 PROFESSIONAL ENGINEER BRIAN M ARMENTA

DRAWN: E	CHECKED: BA
APPROVED: JCA	ISSUE DATE: 07/07/25

CAD FILE NAME: 25022.dwg

SHEET TITLE: GENERAL

PROJECT NUMBER: 25022.1

SHEET NO: E001

ISSUED FOR CONSTRUCTION

PLOT DATE: 7/16/2025 11:21:53 AM

PROFICIENT ENGINEERING
3150 Holcomb Bridge Road
Norcross, Georgia 30071
404.330.9798
PROJECT # 125414

STROUD AND COMPANY
427 8th Street · Macon, Ga 31201
478-743-5097

Panel HP

ROOM
MOUNTING SURFACE
FED FROM EX MDP
NOTE EXISTING

VOLTS 480Y/277V 3P 4W
BUS AMPS 800
NEUTRAL 100%

AIC EXISTING
MAIN BKR MLO
LUGS STANDARD

CKT #	CKT BKR	LOAD KVA	CIRCUIT DESCRIPTION		CKT #	CKT BKR	LOAD KVA	CIRCUIT DESCRIPTION
1	15/3	4.7	HP-1	a	2	15/1	5.0	UH-A
3	|			b	4	15/1	5.0	UH-A
5	|			c	6	20/1	3.0	WH-1
7	15/3	8.1	HP-3	a	8	20/1	0.0	SPACE
9	|			b	10	20/1	0.0	SPACE
11	|			c	12	20/1	0.0	SPACE
13	15/3	6.8	HP-2	a	14	20/1	0.0	SPACE
15	|			b	16	20/1	0.0	SPACE
17	|			c	18	20/1	0.0	SPACE
19	20/1	0.0	SPACE	a	20	20/1	0.0	SPACE
21	20/1	0.0	SPACE	b	22	20/1	0.0	SPACE
23	20/1	0.0	SPACE	c	24	20/1	0.0	SPACE
25	20/1	0.0	SPACE	a	26	20/1	0.0	SPACE
27	20/1	0.0	SPACE	b	28	20/1	0.0	SPACE
29	20/1	0.0	SPACE	c	30	20/1	0.0	SPACE
31	20/1	0.0	SPACE	a	32	20/1	0.0	SPACE
33	20/1	0.0	SPACE	b	34	20/1	0.0	SPACE
35	20/1	0.0	SPACE	c	36	20/1	0.0	SPACE
37	20/1	0.0	SPACE	a	38	125/3	54.8	XFMR T1
39	20/1	0.0	SPACE	b	40	|		
41	20/1	0.0	SPACE	c	42	|		

	CONN KVA	CALC KVA			CONN KVA	CALC KVA	
LIGHTING	2.8	3.5	(125%)	KITCHEN EQUIPMENT	1.2	1.2	(100%)
LARGEST MOTOR	8.1	2.0	(25%)	CONTINUOUS	3.0	3.8	(125%)
MOTORS	5.2	5.2	(100%)	NONCONTINUOUS	0.6	0.6	(100%)
RECEPTACLES	16.0	13.0	(50%>10)	HEATING	58.7	58.7	(100%)
				COOLING	19.7	0.0	(0%)
				TOTAL LOAD		88.0	
				BALANCED 3-PHASE LOAD		105.9 A	
				PHASE A		104%	
				PHASE B		104%	
				PHASE C		92.9%	

Panel LP

ROOM
MOUNTING SURFACE
FED FROM T1
NOTE EXISTING

VOLTS 208Y/120V 3P 4W
BUS AMPS 200
NEUTRAL 100%

AIC EXISTING
MAIN BKR 200
LUGS STANDARD

CKT #	CKT BKR	LOAD KVA	CIRCUIT DESCRIPTION		CKT #	CKT BKR	LOAD KVA	CIRCUIT DESCRIPTION
1	20/1	0.3	EF-4, LIGHTING	a	2	20/1	0.7	RECEPTACLE
3	20/1	1.4	LIGHTING	b	4	20/1	0.7	RECEPTACLE
5	20/1	1.4	EF-1, EF-2, EF-3, LIGHTING	c	6	20/1	0.9	RECEPTACLE
7	20/1	1.3	RECEPTACLE	a	8	20/1	0.7	RECEPTACLE
9	20/1	0.6	WATER COOLER	b	10	20/1	0.7	RECEPTACLE
11	20/1	0.7	RECEPTACLE	c	12	20/1	0.9	RECEPTACLE
13	20/1	1.1	RECEPTACLE	a	14	20/1	0.5	RECEPTACLE
15	20/1	0.4	RECEPTACLE	b	16	20/1	1.2	REFRIGERATOR
17	20/1	0.7	RECEPTACLE	c	18	20/1	1.3	RECEPTACLE
19	20/1	0.2	RECEPTACLE	a	20	20/1	0.7	RECEPTACLE
21	20/1	0.2	RECEPTACLE	b	22	20/1	1.1	RECEPTACLE
23	20/1	0.7	RECEPTACLE	c	24	20/1	0.7	RECEPTACLE
25	20/1	0.2	LIGHTING	a	26	20/1	0.7	RECEPTACLE
27	20/1	0.7	RECEPTACLE	b	28	20/1	0.2	RECEPTACLE
29	20/1	0.0	SPACE	c	30	45/2	13.0	FCU-3
31	20/1	0.3	RP-1	a	32	|		
33	20/1	0.4	WL-1	b	34	45/2	7.2	FCU-1
35	20/1	0.2	RECEPTACLE	c	36	|		
37	20/1	0.0	SPACE	a	38	45/2	13.0	FCU-2
39	20/1	0.0	SPACE	b	40	|		
41	20/1	0.0	SPACE	c	42	20/1	0.0	SPACE

	CONN KVA	CALC KVA			CONN KVA	CALC KVA	
LIGHTING	2.8	3.5	(125%)	RECEPTACLES	16.0	13.0	(50%>10)
LARGEST MOTOR	1.7	0.4	(25%)	KITCHEN EQUIPMENT	1.2	1.2	(100%)
MOTORS	5.2	5.2	(100%)	NONCONTINUOUS	0.6	0.6	(100%)
				HEATING	29.0	29.0	(100%)
				TOTAL LOAD		53.0	
				BALANCED 3-PHASE LOAD		147.0 A	
				PHASE A		108%	
				PHASE B		96.3%	
				PHASE C		96.2%	

ONE-LINE NOTES

PANELS ARE EXISTING TO REMAIN AND DO NOT REQUIRE MODIFICATION UNDER THIS PHASE OF CONSTRUCTION. SHOWN FOR INFORMATION PURPOSES.

CONTRACTOR SHALL VERIFY EXACT RATINGS OF THE ALL EXISTING PANEL BOARDS PRIOR TO COMMENCING OF WORK.

CONTRACTOR SHALL VERIFY EXISTING CIRCUITING, SPARE BREAKERS, SPACES, AND EXISTING EQUIPMENT AND DEVICES TO REMAIN PRIOR TO COMMENCING WORK.

EXISTING CIRCUIT BREAKERS MAY BE REUSED WHERE OF THE APPROPRIATE SIZE AND IN GOOD CONDITION. NEW BREAKERS MAY BE REQUIRED FOR THE COMPLETION OF THE RENOVATION. BREAKERS SHALL BE SIZED AS SHOWN IN PANEL SCHEDULES.

GENERAL SCHEDULE

CALLOUT	SYMBOL	VOLTS	KVA	BREAKER	CIRCUIT	WIRE CALLOUT	DISCONNECT DESCRIPTION
EF-1		120V 1P 2W	0.15	20/1	LP-5	1/2"C,1#10,#10N,#10G	CONTROLLED BY OCCUPANCY SENSOR
EF-2		120V 1P 2W	0.15	20/1	LP-5	1/2"C,1#10,#10N,#10G	CONTROLLED BY OCCUPANCY SENSOR
EF-3		120V 1P 2W	0.1	20/1	LP-5	1/2"C,1#10,#10N,#10G	CONTROLLED BY OCCUPANCY SENSOR
EF-4		120V 1P 2W	0.01	20/1	LP-1	1/2"C,1#12,#12N,#12G	RUNS CONTINUOUSLY
FCU-1		208/120V 2P 3W	7.18	45/2	LP-34,36	3/4"C,2#6,#6N,#10G	60A/2P/NEMA 1
FCU-2		208/120V 2P 3W	12.96	45/2	LP-38,40	3/4"C,2#6,#6N,#10G	60A/2P/NEMA 1
FCU-3		208/120V 2P 3W	12.96	45/2	LP-30,32	3/4"C,2#6,#6N,#10G	60A/2P/NEMA 1
HP-1		480V 3P 4W	4.74	15/3	HP-1,3,5	1/2"C,3#12,#12N,#12G	30A/3P/NEMA 3R
HP-2		480V 3P 4W	6.82	15/3	HP-13,15,17	1/2"C,3#12,#12N,#12G	30A/3P/NEMA 3R
HP-3		480V 3P 4W	8.15	15/3	HP-7,9,11	1/2"C,3#12,#12N,#12G	30A/3P/NEMA 3R
RP-1		120V 1P 2W	0.3	20/1	LP-31	1/2"C,1#12,#12N,#12G	30A/1P/NEMA 1
UH-A		277V 1P 2W	5	15/1	HP-4	1/2"C,1#12,#12N,#12G	30A/1P/NEMA 1
UH-A		277V 1P 2W	5	15/1	HP-2	1/2"C,1#12,#12N,#12G	30A/1P/NEMA 1
WH-1		277V 1P 2W	3	20/1	HP-6	1/2"C,1#12,#12N,#12G	30A/1P/NEMA 1
WL-1		120V 1P 2W	0.4	20/1	LP-33	1/2"C,1#12,#12N,#12G	30A/1P/NEMA 1

LUMINAIRE SCHEDULE

CALLOUT	SYMBOL	LAMP	DESCRIPTION	MODEL	VOLTS
A		(1) 35W LED	HIGH-BAY LED LIGHT	TBD	120V 1P 2W
B		(1) 35W LED	2X4 LED LAY-IN TROFFER	TBD	120V 1P 2W
C		(1) 35W LED	LED PENDANT LIGHT	TBD	120V 1P 2W
EX1		(2) 1.5W LED	EXISTING COMBINATION EXIT/EMERGENCY LIGHTING UNIT	TBD	120V 1P 2W
EX2		(1) 32W LED	EXISTING EXTERIOR WALL PACK	TBD	MULTIPLE
EX3		(1) 32W LED	EXISTING EXTERIOR WALL PACK	TBD	MULTIPLE
G		(1) 35W	4' LED STRP LIGHT	TBD	120V 1P 2W
H		(1) 10W	6" LED RECESSED DOWNLIGHT	TBD	120V 1P 2W
T		(2) 1.4W LED	EMERGENCY LIGHTING UNIT	LITHONIA ELM2L-LED	120V 1P 2W
XC		(2) 1.5W LED	COMBINATION EXIT/EMERGENCY LIGHTING UNIT	LITHONIA LHQM-LED-R-HO	120V 1P 2W
XR		(1) INCLUDED	REMOTE LAMP HEAD	LITHONIA ELA-QWP-L0309-SD	120V 1P 2W

ALL Architecture, LLC
2052 CHRYSLER DRIVE NE, ATLANTA, GA 30345
TELEPHONE: (404) 316-2896
E-MAIL: INFO@ALLARCHLLC.COM

REVISIONS

NO.	DATE

COPYRIGHT
THIS DRAWING AND ALL REPRODUCTIONS ARE COPYRIGHTED AND THE PROPERTY OF ALL ARCHITECTURE LLC AND MAY NOT BE USED IN ANY WAY WITHOUT THEIR PERMISSION.

PROJECT TITLE:
NATIONWIDE CONSTRUCTION GROUP - RENOVATION
201 GRISWOLDVILLE INDUSTRIAL BLVD
MACON, GEORGIA 31217

SEAL:
GEORGIA REGISTERED No. 032547 PROFESSIONAL ENGINEER BRIAN M. ARMENTA

DRAWN: E	CHECKED: BA
APPROVED: JCA	ISSUE DATE: 07/07/25

CAD FILE NAME: 25022.dwg

SHEET TITLE: SCHEDULES

PROJECT NUMBER: 25022.1

SHEET NO: E002

ISSUED FOR CONSTRUCTION

PLOT DATE: 7/16/2025 11:22:04 AM

COM*check* Software Version 4.1.5.5

Interior Lighting Compliance Certificate

Project Information

Energy Code: 2015 IECC
Project Title: Nationwide Renovation Phase 1
Project Type: New Construction

Construction Site:
201 GRISWOLDVILLE INDUSTRIAL BLVD
MACON, GA 31210

Owner/Agent:

Designer/Contractor:
ALL ARCHITECTURE, LLC
2052 CHRYSLER DRIVE NE
ATLANTA, GA 30345

Additional Efficiency Package(s)

Credits: 1.0 Required 1.0 Proposed
Reduced Lighting Power, 1.0 credit

Allowed Interior Lighting Power

A Area Category	B Floor Area (ft2)	C Allowed Watts / ft2	D Allowed Watts (B X C)
1-Office	5198	0.74	3836
2-Warehouse	2887	0.59	1715
		Total Allowed Watts =	5551

Proposed Interior Lighting Power

A Fixture ID : Description / Lamp / Wattage Per Lamp / Ballast	B Lamps/ Fixture	C # of Fixtures	D Fixture Watt.	E (C X D)
1-Office				
LED: H: 6" LED RECESSED DOWNLIGHT: Other: Electronic:	1	4	10	40
LED: C: LED PENDANT LIGHT: Other:	1	3	35	105
LED: B: 2X4 LED LAY-IN TROFFER: Other:	1	62	35	2170
2-Warehouse				
LED: A: HIGH-BAY LED LIGHT: Other:	1	6	35	210
LED: G: 4' LED STRP LIGHT: Other: Electronic:	1	3	35	105
			Total Proposed Watts =	2630

Interior Lighting PASSES: Design 53% better than code

Interior Lighting Compliance Statement

Compliance Statement: The proposed interior lighting design represented in this document is consistent with the building plans, specifications, and other calculations submitted with this permit application. The proposed interior lighting systems have been designed to meet the 2015 IECC requirements in COM*check* Version 4.1.5.5 and to comply with any applicable mandatory requirements listed in the Inspection Checklist.

Brian M. Armenta -PE — Name - Title
Signature — 07/09/2025 Date

COM*check* Software Version 4.1.5.5

Inspection Checklist

Energy Code: 2015 IECC

Requirements: 100.0% were addressed directly in the COM*check* software

Text in the "Comments/Assumptions" column is provided by the user in the COMcheck Requirements screen. For each requirement, the user certifies that a code requirement will be met and how that is documented, or that an exception is being claimed. Where compliance is itemized in a separate table, a reference to that table is provided.

Section # & Req.ID	Plan Review	Complies?	Comments/Assumptions
C103.2 [PR4][1]	Plans, specifications, and/or calculations provide all information with which compliance can be determined for the interior lighting and electrical systems and equipment and document where exceptions to the standard are claimed. Information provided should include interior lighting power calculations, wattage of bulbs and ballasts, transformers and control devices.	☐Complies ☐Does Not ☐Not Observable ☐Not Applicable	Requirement will be met.
C406 [PR9][1]	Plans, specifications, and/or calculations provide all information with which compliance can be determined for the additional energy efficiency package options.	☐Complies ☐Does Not ☐Not Observable ☐Not Applicable	Requirement will be met.

Additional Comments/Assumptions:

1 High Impact (Tier 1) | 2 Medium Impact (Tier 2) | 3 Low Impact (Tier 3)

Section # & Req.ID	Final Inspection	Complies?	Comments/Assumptions
C303.3, C408.2.5.2 [FI17][3]	Furnished O&M instructions for systems and equipment to the building owner or designated representative.	☐Complies ☐Does Not ☐Not Observable ☐Not Applicable	Requirement will be met.
C405.4.1 [FI18][1]	Interior installed lamp and fixture lighting power is consistent with what is shown on the approved lighting plans, demonstrating proposed watts are less than or equal to allowed watts.	☐Complies ☐Does Not ☐Not Observable ☐Not Applicable	*See the Interior Lighting fixture schedule for values.*
C408.2.5.1 [FI16][3]	Furnished as-built drawings for electric power systems within 90 days of system acceptance.	☐Complies ☐Does Not ☐Not Observable ☐Not Applicable	Requirement will be met.
C408.3 [FI33][1]	Lighting systems have been tested to ensure proper calibration, adjustment, programming, and operation.	☐Complies ☐Does Not ☐Not Observable ☐Not Applicable	Requirement will be met.

Additional Comments/Assumptions:

1 High Impact (Tier 1) | 2 Medium Impact (Tier 2) | 3 Low Impact (Tier 3)

Section # & Req.ID	Rough-In Electrical Inspection	Complies?	Comments/Assumptions
C405.2.1 [EL15][1]	Lighting controls installed to uniformly reduce the lighting load by at least 50%.	☐Complies ☐Does Not ☐Not Observable ☐Not Applicable	Requirement will be met.
C405.2.1 [EL18][1]	Occupancy sensors installed in required spaces.	☐Complies ☐Does Not ☐Not Observable ☐Not Applicable	Requirement will be met.
C405.2.1, C405.2.2.3 [EL23][2]	Independent lighting controls installed per approved lighting plans and all manual controls readily accessible and visible to occupants.	☐Complies ☐Does Not ☐Not Observable ☐Not Applicable	Requirement will be met.
C405.2.2.1 [EL22][2]	Automatic controls to shut off all building lighting installed in all buildings.	☐Complies ☐Does Not ☐Not Observable ☐Not Applicable	Requirement will be met.
C405.2.3 [EL16][2]	Daylight zones provided with individual controls that control the lights independent of general area lighting.	☐Complies ☐Does Not ☐Not Observable ☐Not Applicable	Requirement will be met.
C405.2.3, C405.2.3.1, C405.2.3.2 [EL20][1]	Primary sidelighted areas are equipped with required lighting controls.	☐Complies ☐Does Not ☐Not Observable ☐Not Applicable	Requirement will be met.
C405.2.3, C405.2.3.1, C405.2.3.3 [EL21][1]	Enclosed spaces with daylight area under skylights and rooftop monitors are equipped with required lighting controls.	☐Complies ☐Does Not ☐Not Observable ☐Not Applicable	**Exception:** Requirement does not apply.
C405.2.4 [EL4][1]	Separate lighting control devices for specific uses installed per approved lighting plans.	☐Complies ☐Does Not ☐Not Observable ☐Not Applicable	Requirement will be met.
C405.2.4 [EL8][1]	Additional interior lighting power allowed for special functions per the approved lighting plans and is automatically controlled and separated from general lighting.	☐Complies ☐Does Not ☐Not Observable ☐Not Applicable	Requirement will be met.
C405.3 [EL6][1]	Exit signs do not exceed 5 watts per face.	☐Complies ☐Does Not ☐Not Observable ☐Not Applicable	Requirement will be met.

Additional Comments/Assumptions:

1 High Impact (Tier 1) | 2 Medium Impact (Tier 2) | 3 Low Impact (Tier 3)

PROFICIENT ENGINEERING
3150 Holcomb Bridge Road
Norcross, Georgia 30071
404.330.9798
PROJECT # 125414

STROUD AND COMPANY
427 8th Street · Macon, Ga 31201
478-743-5097

ALL Architecture, LLC
2052 CHRYSLER DRIVE NE, ATLANTA, GA 30345
TELEPHONE: (404) 316-2896
E-MAIL: INFO@ALLARCHLLC.COM

REVISIONS
NO. | DATE

COPYRIGHT
THIS DRAWING AND ALL REPRODUCTIONS ARE COPYRIGHTED AND THE PROPERTY OF ALL ARCHITECTURE, LLC AND MAY NOT BE USED IN ANY WAY WITHOUT THEIR PERMISSION.

PROJECT TITLE:
NATIONWIDE CONSTRUCTION GROUP - RENOVATION
201 GRISWOLDVILLE INDUSTRIAL BLVD
MACON, GEORGIA 31217

SEAL:
GEORGIA REGISTERED No. 032547 PROFESSIONAL ENGINEER BRIAN M ARMENTA

DRAWN:	CHECKED:
E	BA
APPROVED: JCA	ISSUE DATE: 07/07/25

CAD FILE NAME: 25022.dws
SHEET TITLE: COMCHECK
PROJECT NUMBER: 25022.1
SHEET NO: E003

ISSUED FOR CONSTRUCTION

PLOT DATE: 7/16/2025 11:22:08 AM

PROFICIENT
ENGINEERING
3150 Holcomb Bridge Road
Norcross, Georgia 30071
404.330.9798
PROJECT # 125414

KEYNOTES

1. WEATHERPROOF J-BOX FOR EXTERIOR SIGN. COORDINATE IN FIELD WITH SIGN INSTALLER FOR LOCATION AND OTHER REQUIREMENTS. EXTERIOR SIGN TO BE CONTROLLED BY LIGHTING CONTACTOR WITH PHOTOCELL AND TIMER.
2. JBOX FOR CEILING FAN. FIELD COORDINATE WITH SUPPLIER FOR EXACT POWER REQUIREMENT.
3. JBOX FOR OVERHEAD DOOR. FIELD COORDINATE WITH SUPPLIER FOR EXACT POWER REQUIREMENT AND LOCATION.
4. LOCATION OF EXISTING DISTRIBUTION EQUIPMENT TO REMAIN.
5. FIELD COORDINATE WITH MECHANICAL FOR EXACT LOCATION AND ADDITIONAL REQUIREMENT FOR HVAC EQUIPMENT.
6. INSTALL WP/GFCI DUPLEX RECEPTACLE WITHIN 25' OF MECHANICAL EQUIPMENT.
7. WATER HEATER AND RECIRCULATION PUMP. FIELD COORDINATE WITH PLUMBING FOR EXACT LOCATION AND ADDITIONAL REQUIREMENT.

GENERAL NOTES

REFER TO ARCHITECTURAL PLANS FOR EXACT LOCATIONS OF ALL DEVICES.

ALL RECEPTACLES SHALL BE GROUNDED AS REQUIRED BY ARTICLE 250-146.

PANELS ARE EXISTING TO REMAIN. UPDATE PANEL DIRECTORIES AS REQUIRED.

CLEAN AND REPAIR EXISTING ITEMS TO REMAIN. ALL ITEMS NEED TO BE TESTED FOR FUNCTIONALITY AND REPLACED IF FAULTY. ANY DAMAGED ITEMS WILL NEED TO BE REPLACED.

CONTRACTOR SHALL VERIFY EXISTING CIRCUITING, SPARE BREAKERS, SPACES, AND EXISTING EQUIPMENT AND DEVICES TO REMAIN PRIOR TO COMMENCING WORK.

DRAWING IS DIAGRAMMATIC ONLY. COORDINATE FINAL DEVICES AND EQUIPMENT LOCATIONS WITH OWNER/ ARCHITECT PRIOR TO ROUGH-IN.

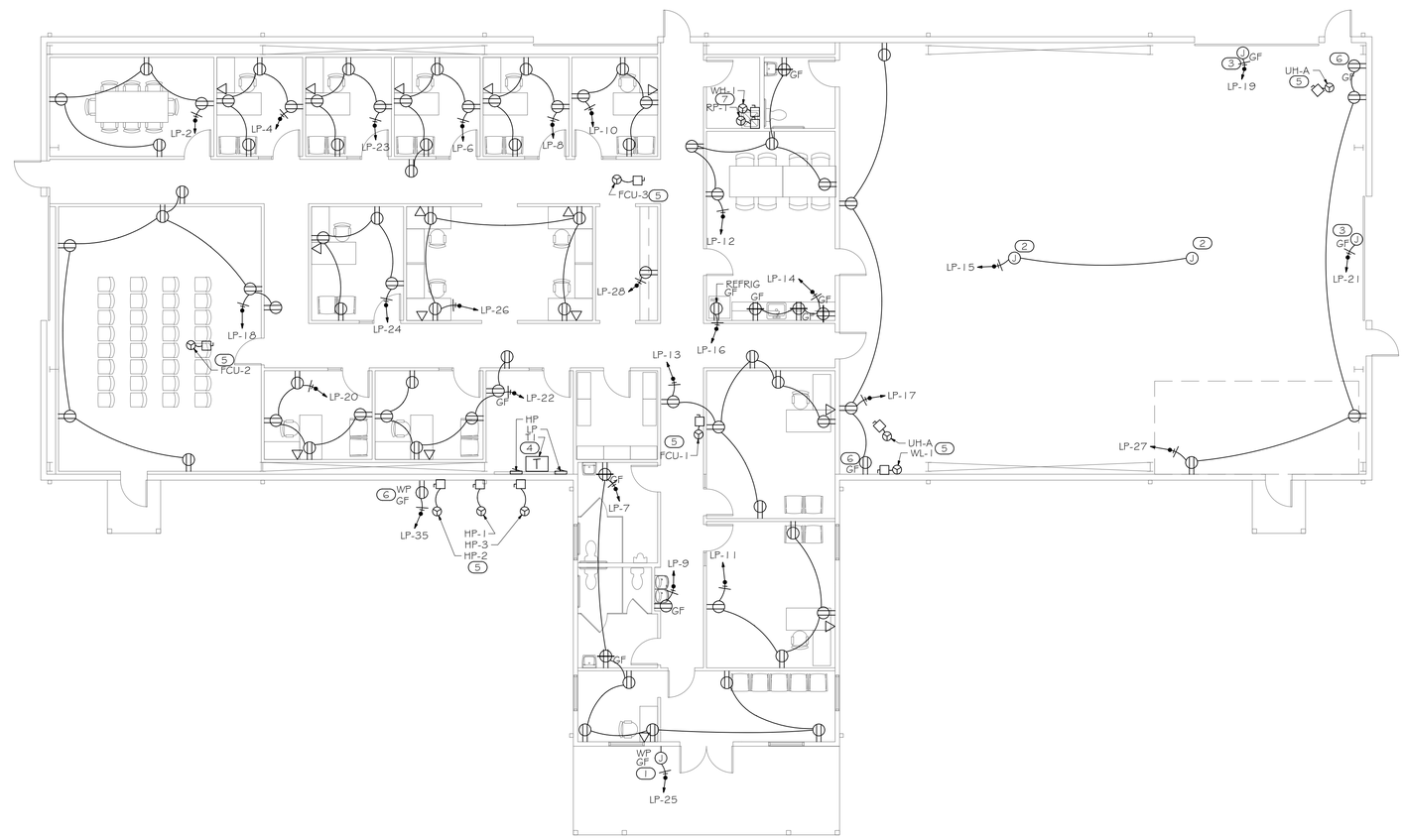

1 / E100 PHASE 1 FLOOR PLAN - POWER

SCALE: 1/8" = 1'-0"

0 4 8 16

STROUD AND COMPANY
427 8th Street · Macon, Ga 31201
478-743-5097

ALL Architecture, LLC
2052 CHRYSLER DRIVE NE, ATLANTA, GA 30345
TELEPHONE: (404) 316-2896
E-MAIL: INFO@ALLARCHLLC.COM

REVISIONS	
NO.	DATE

COPYRIGHT
THIS DRAWING AND ALL REPRODUCTIONS ARE COPYRIGHTED AND THE PROPERTY OF ALL ARCHITECTURE LLC AND MAY NOT BE USED IN ANY WAY WITHOUT THEIR PERMISSION.

PROJECT TITLE:
NATIONWIDE CONSTRUCTION GROUP - RENOVATION
201 GRISWOLDVILLE INDUSTRIAL BLVD
MACON, GEORGIA 31217

SEAL:
GEORGIA REGISTERED No. 032547 PROFESSIONAL ENGINEER BRIAN M ARMENTA

DRAWN:	CHECKED:
E	BA
APPROVED:	ISSUE DATE:
JCA	07/07/25

CAD FILE NAME: 25022.dwg

SHEET TITLE: PHASE 1 FLOOR PLAN - POWER

PROJECT NUMBER: 25022.1

SHEET NO: E100

ISSUED FOR CONSTRUCTION

PLOT DATE: 7/16/2025 11:22:26 AM

PROFICIENT
ENGINEERING
3150 Holcomb Bridge Road
Norcross, Georgia 30071
404.330.9798
PROJECT # 125414

KEYNOTES

1. CEILING MOUNTED COMBO EXIT SIGN.
2. EXISTING LIGHT TO REMAIN AND CIRCUITS MAINTAINED.
3. CIRCUIT TO EXISTING LIGHTING EMERGENCY CIRCUIT SERVING AREA.
4. EXHAUST FAN TO BE MOUNTED ABOVE DOOR.
5. OCCUPANCY SENSOR TO BE CONNECTED A HEAD OF LOCAL SWITCHES. DETECTION OF MOTION BY ANY SENSOR SHALL ENERGIZE FIXTURES. WHEN OCCUPANCY WAS NOT DETECTED BY ALL SENSOR FOR 30MINUTES, THE LIGHT FIXTURES SHALL DE-ENERGIZE.

GENERAL NOTES

REFER TO ARCHITECTURAL REFLECTED CEILING PLAN FOR EXACT LOCATIONS OF ALL CEILING MOUNTED DEVICES.

PROVIDE UNSWITCHED HOT LEG OF CIRCUIT TO EMERGENCY LIGHTING AND EXIT SIGNS.

COORDINATE EXACT LOCATION OF SWITCHING ZONES WITH ARCHITECT / OWNER.

CONTRACTOR SHALL PROVIDE LIGHTING CONTROL REQUIRED BY IECC 2015. COORDINATE WITH LIGHTING VENDOR FOR REQUIRED DEVICES TO ACCOMPLISH THE REQUIREMENT OF IECC. DAYLIGHT-RESPONSIVE CONTROLS TO BE PROVIDED PER IECC C405.2.3.2.

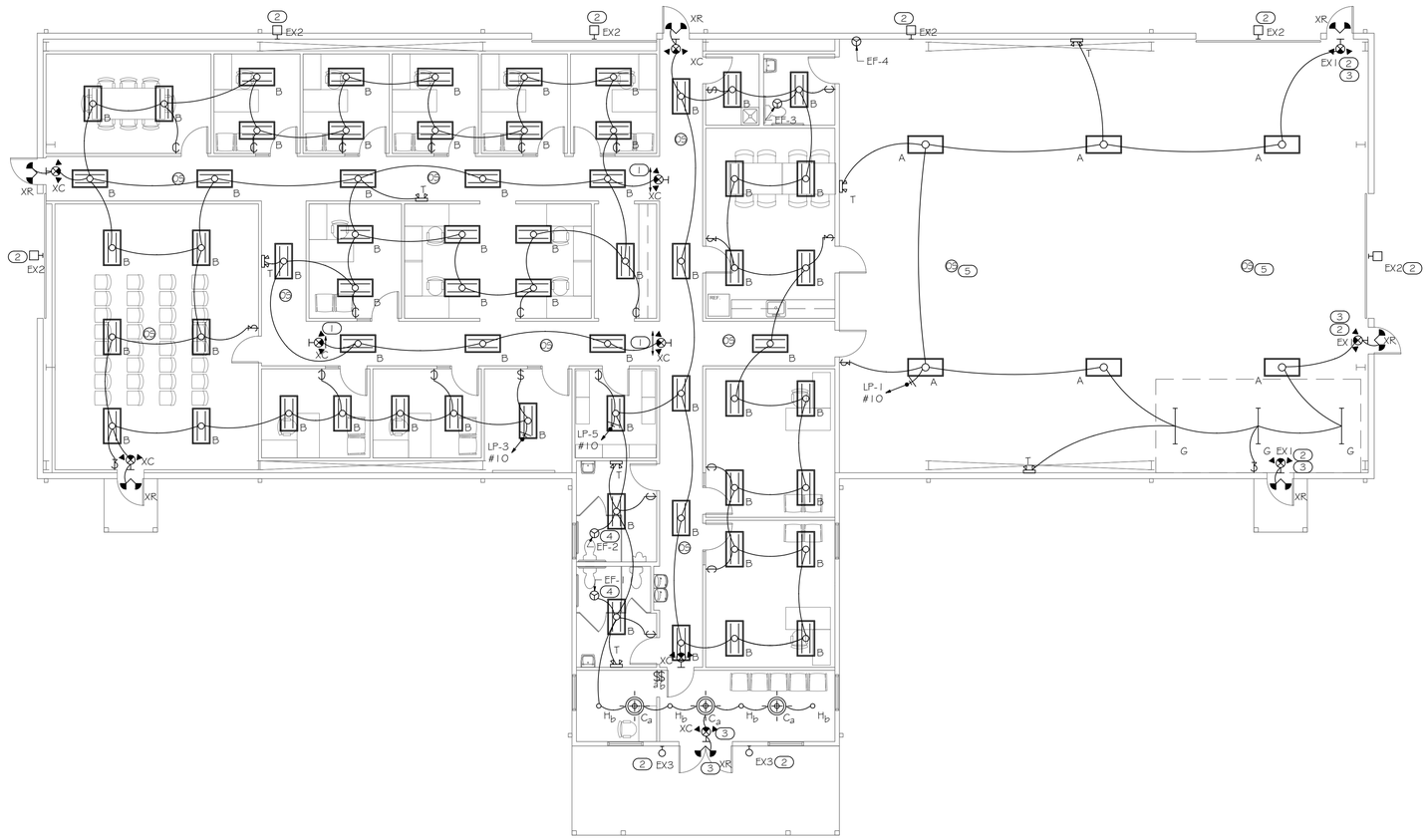

1 PHASE 1 FLOOR PLAN- LIGHTING

E110

SCALE: 1/8" = 1'-0"

0 4 8 16

STROUD AND COMPANY
427 8th Street · Macon, Ga 31201
478-743-5097

ALL Architecture, LLC
2052 CHRYSLER DRIVE NE, ATLANTA, GA 30345
TELEPHONE: (404) 316-2896
E-MAIL: INFO@ALLARCHLLC.COM

REVISIONS

NO.	DATE

COPYRIGHT
THIS DRAWING AND ALL REPRODUCTIONS ARE COPYRIGHTED AND THE PROPERTY OF ALL ARCHITECTURE LLC AND MAY NOT BE USED IN ANY WAY WITHOUT THEIR PERMISSION.

PROJECT TITLE:
NATIONWIDE CONSTRUCTION GROUP - RENOVATION
201 GRISWOLDVILLE INDUSTRIAL BLVD
MACON, GEORGIA 31217

SEAL:
GEORGIA REGISTERED No. 032547 PROFESSIONAL ENGINEER BRIAN M. ARMENTA

DRAWN:	CHECKED:
E	BA
APPROVED:	ISSUE DATE:
JCA	07/07/25

CAD FILE NAME: 25022.dwg

SHEET TITLE: PHASE 1 FLOOR PLAN - LIGHTING

PROJECT NUMBER: 25022.1

SHEET NO: E110

ISSUED FOR CONSTRUCTION

PLOT DATE: 7/16/2025 11:22:36 AM