CITY OF PERRY, GA

EAST PERRY WASTEWATER TREATMENT FACILITY

PERRY, GA 31069

ISSUED FOR CONSTRUCTION

JUNE 26, 2024

148538

GEORGIA REGISTERED No. PE048949 PROFESSIONAL ENGINEER TRENTON K. HOLLIS

Sealed: June 26th, 2024

no.	date	by	ckd	description
0	6/26/24	TKH	ALW	ISSUED FOR CONSTRUCTION

BURNS McDONNELL
4004 SUMMIT BLVD. NE, SUITE 1200
ATLANTA, GA 30319
770-587-4776
Burns & McDonnell Engineering Co, Inc.
LICENSEE NO. PEF000100
AUTHORIZATION NO. J550903

Cover
100G001

CONTRACT DRAWINGS

GENERAL DRAWINGS

DRAWING NO	DRAWING TITLE
100G001	COVER
100G002	INDEX I
100G003	INDEX II
100G004	GENERAL LEGEND

CIVIL DRAWINGS

DRAWING NO	DRAWING TITLE
100C001	LEGEND, ABBREVIATIONS, AND SURVEY CONTROL
100C002	GENERAL NOTES
100C003	EROSION & SEDIMENT CONTROL GENERAL NOTES 1
100C004	EROSION & SEDIMENT CONTROL GENERAL NOTES 2
100C005	EROSION & SEDIMENT CONTROL GENERAL NOTES 3
100C100	OVERALL SITE PLAN
100CD101	CIVIL DEMOLITION PLAN SHEET 1
100CD102	CIVIL DEMOLITION PLAN SHEET 2
100C101	SITE PLAN AREA 1
100C102	SITE PLAN AREA 2
100C103	SITE PLAN AREA 3
100C104	SITE PLAN AREA 4
100C105	SITE PLAN AREA 5
100C111	SITE GRADING PLAN AREA 1
100C112	SITE GRADING PLAN AREA 2
100C113	SITE GRADING PLAN AREA 3
100C114	SITE GRADING PLAN AREA 4
100C115	SITE GRADING PLAN AREA 5
100C116	SITE GRADING POINT TABLE SHEET
100C121	YARD PIPING PLAN AREA 1
100C122	YARD PIPING PLAN AREA 2
100C123	YARD PIPING PLAN AREA 3
100C124	YARD PIPING PLAN AREA 4
100C125	YARD PIPING PLAN AREA 5
100C126	YARD PIPING POINT TABLE SHEET
100C130	TREATED EFFLUENT OVERALL PLAN
100C131	TREATED EFFLUENT PLAN AND PROFILE STAT 0+00 TO STA 4+00
100C132	TREATED EFFLUENT PLAN AND PROFILE STAT 4+00 TO STA 8+00
100C133	TREATED EFFLUENT PLAN AND PROFILE STAT 8+00 TO STA 12+00
100C134	TREATED EFFLUENT PLAN AND PROFILE STAT 12+00 TO EOL STA 14+20.15
100C140	OVERALL CONSTRUCTION ACCESS DRIVE PLAN
100C141	CIVIL CONSTRUCTION ACCESS DRIVE PLAN SHEET 1
100C142	CIVIL CONSTRUCTION ACCESS DRIVE PLAN SHEET 2
100C143	CIVIL CONSTRUCTION ACCESS DRIVE PLAN SHEET 3
100C144	CIVIL CONSTRUCTION ACCESS DRIVE PLAN SHEET 4
100C145	CIVIL CONSTRUCTION ACCESS DRIVE PLAN SHEET 5
100C146	CIVIL CONSTRUCTION ACCESS DRIVE PLAN SHEET 6
100C147	CIVIL CONSTRUCTION ACCESS DRIVE PLAN SHEET 7
100C152	EROSION AND SEDIMENT CONTROL INITIAL PHASE 1
100C153	EROSION AND SEDIMENT CONTROL INITIAL PHASE 2
100C154	EROSION AND SEDIMENT CONTROL INTERMEDIATE PHASE 1
100C155	EROSION AND SEDIMENT CONTROL INTERMEDIATE PHASE 2
100C156	EROSION AND SEDIMENT CONTROL FINAL PHASE 1
100C157	EROSION AND SEDIMENT CONTROL FINAL PHASE 2
100C501	CIVIL DETAIL SHEET 1
100C502	CIVIL DETAIL SHEET 2
100C503	CIVIL DETAIL SHEET 3
100C504	CIVIL DETAIL SHEET 4
100C505	CIVIL DETAIL SHEET 5
100C510	EROSION & SEDIMENT CONTROL DETAILS 1
100C511	EROSION & SEDIMENT CONTROL DETAILS 2

STRUCTURAL DRAWINGS

DRAWING NO	DRAWING TITLE
100S001	STRUCTURAL ABBREVIATIONS AND LEGEND
100S002	STRUCTURAL GENERAL NOTES AND SPECIAL INSPECTIONS
100S501	STRUCTURAL CONCRETE AND ANCHOR BOLT NOTES AND DETAILS
100S502	STANDARD CONCRETE DETAILS
100S503	STANDARD CONCRETE DETAILS
100S504	STANDARD CONCRETE CONSTRUCTION JOINT DETAILS
100S505	STANDARD CONCRETE CONTRACTION AND EXPANSION JOINT DETAILS
100S506	STANDARD STAIR DETAILS
100S507	STANDARD ALUMINUM RAIL & FRAMING DETAILS
100S508	STANDARD MISCELLANEOUS DETAILS
200S101	HEADWORKS FOUNDATION PLAN
200S102	HEADWORKS TOP PLAN
200S301	HEADWORKS SECTIONS SHEET 1
200S302	HEADWORKS SECTIONS SHEET 2 AND DETAIL
200S401	HEADWORKS STAIR PLANS AND DETAILS
200S501	HEADWORKS MANUAL BAR SCREEN DETAILS
400S101	PROCESS BASIN A FOUNDATION PLAN
400S102	PROCESS BASIN A TOP PLAN
400S301	PROCESS BASIN A SECTIONS SHEET 1
400S302	PROCESS BASIN A SECTIONS SHEET 2
400S303	PROCESS BASIN A SECTIONS SHEET 3 AND WALL REINFORCING SCHEDULE
400S304	PROCESS BASIN A PIPE SUPPORT SECTIONS AND DETAILS
400S401	PROCESS BASIN A ENLARGED PLANS
400S402	PROCESS BASIN STAIR PLAN AND DETAILS
400S501	PROCESS BASIN A DETAILS
500S100	PROCESS BUILDING A LOAD MAPS
500S101	PROCESS BUILDING A FOUNDATION PLAN
500S102	PROCESS BUILDING A UPPER LEVEL PLAN
500S103	PROCESS BUILDING A ROOF PLAN
500S301	PROCESS BUILDING A SECTIONS 1
500S302	PROCESS BUILDING A SECTIONS 2
500S401	PROCESS BUILDING A STAIR PLAN AND DETAILS
500S501	PROCESS BUILDING A DETAILS
600S101	CLARIFIERS FOUNDATION PLAN
600S301	CLARIFIERS SECTIONS
600S401	CLARIFIERS STAIR PLAN AND DETAILS
600S501	CLARIFIERS DETAILS
650S101	CLARIFIER SPLITTER PLAN VIEWS
650S301	CLARIFIER SPLITTER SECTIONS
650S401	CLARIFIER SPLITTER STAIR PLAN AND DETAILS
750S100	UV TREATMENT LOAD MAPS
750S101	UV TREATMENT PLAN VIEWS
750S102	UV TREATMENT TOP PLAN
750S301	UV TREATMENT SECTIONS
750S302	UV TREATMENT SECTIONS AND DETAILS
775S101	CASCADE AERATION PLAN VIEWS
775S301	CASCADE AERATION SECTIONS AND DETAILS
800S101	SOLIDS HOLDING BASIN A FOUNDATION PLAN
800S301	SOLIDS HOLDING BASIN A SECTIONS SHEET 1 AND DETAILS
800S302	SOLIDS HOLDING BASIN A SECTIONS SHEET 2 AND DETAILS
850S100	SOLIDS HANDLING LOAD MAPS
850S101	SOLIDS HANDLING FOUNDATION PLAN
850S102	SOLIDS HANDLING ROOF PLAN
850S301	SOLIDS HANDLING SECTIONS & DETAILS
850S302	SOLIDS HANDLING SECTIONS & DETAILS

VICINITY MAP

NOT TO SCALE

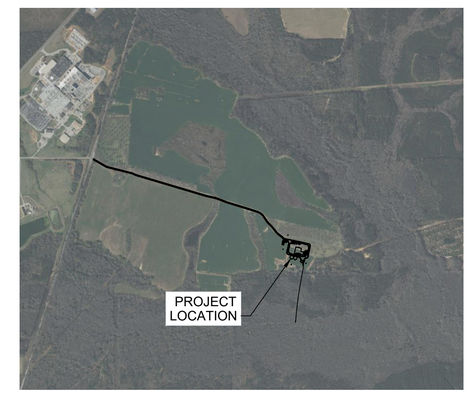

LOCATION MAP

NOT TO SCALE

GEORGIA REGISTERED No. PE048949 PROFESSIONAL ENGINEER TRENTON K. HOLLIS

Sealed: June 26th, 2024

no.	date	by	ckd	description
0	6/26/24	TKH	ALW	ISSUED FOR CONSTRUCTION

BURNS McDONNELL
4004 SUMMIT BLVD. NE, SUITE 1200
ATLANTA, GA 30319
770-587-4776
Burns & McDonnell Engineering Co, Inc.
LICENSEE NO. PEF000100
AUTHORIZATION NO. J550903

EAST PERRY WASTEWATER TREATMENT FACILITY
148538

Index I
100G002

CONTRACT DRAWINGS

ARCHITECTURAL DRAWINGS

DRAWING NO	DRAWING TITLE
100A001	ARCHITECTURAL LEGEND & ABBREVIATIONS
100A002	ARCHITECTURAL GENERAL NOTES
100A003	ARCHITECTURAL STANDARD DETAILS SHEET 1
100A004	ARCHITECTURAL STANDARD DETAILS SHEET 2
100A005	ARCHITECTURAL STANDARD DETAILS SHEET 3
100A006	ARCHITECTURAL STANDARD DETAILS SHEET 4
500A101	PROCESS BUILDING A FLOOR PLANS
500A102	PROCESS BUILDING A ROOF PLAN
500A201	PROCESS BUILDING A EAST AND WEST ELEVATIONS
500A202	PROCESS BUILDING A NORTH AND SOUTH ELEVATIONS
500A301	PROCESS BUILDING A SECTION
500A601	PROCESS BUILDING A ARCHITECTURAL SCHEDULES AND DETAILS
750A101	UV DISINFECTION FLOOR PLAN
750A102	UV DISINFECTION ROOF PLAN
750A201	UV DISINFECTION ELEVATIONS
750A301	UV DISINFECTION SECTIONS AND DETAILS
850A101	SOLIDS HANDLING BUILDING FLOOR PLAN
850A102	SOLIDS HANDLING BUILDING REFLECTED CEILING & ROOF PLAN
850A201	SOLIDS HANDLING BUILDING NORTH AND SOUTH ELEVATIONS
850A202	SOLIDS HANDLING BUILDING EAST AND WEST ELEVATIONS
850A301	SOLIDS HANDLING BUILDING SECTIONS
850A601	SOLIDS HANDLING BUILDING ARCHITECTURAL SCHEDULES AND DETAILS

MECHANICAL DRAWINGS

DRAWING NO	DRAWING TITLE
100M001	MECHANICAL LEGEND, ABBREVIATIONS AND GENERAL NOTES
100M002	MECHANICAL CONTROLS LEGEND, ABBREVIATIONS AND GENERAL NOTES
100M501	MECHANICAL DETAILS
100M601	MECHANICAL SCHEDULES
100M602	MECHANICAL CONTROLS
100M603	MECHANICAL CONTROLS
100P001	PLUMBING LEGEND, ABBREVIATIONS AND GENERAL NOTES
100P501	PLUMBING DETAILS
100P601	PLUMBING SCHEDULES
500M101	PROCESS BUILDING - UPPER LEVEL PLAN
500M102	PROCESS BUILDING - LOWER LEVEL PLAN
500P101	PROCESS BUILDING - UPPER & LOWER LEVEL PLANS
850M101	SOLIDS HANDLING - MECHANICAL PLAN
850P101	SOLIDS HANDLING - PLUMBING PLANS
850P901	SOLIDS HANDLING - PLUMBING ISOMETRIC

PROCESS & INSTRUMENTATION DRAWINGS

DRAWING NO	DRAWING TITLE
100DI601	P&ID LEGEND, ABBREVIATIONS, AND GENERAL NOTES SHEET 1
100DI602	P&ID LEGEND, ABBREVIATIONS, AND GENERAL NOTES SHEET 2
100DI603	P&ID LEGEND, ABBREVIATIONS, AND GENERAL NOTES SHEET 3
100DI604	HEADWORKS P&ID
100DI605	PROCESS BASINS P&ID
100DI606	PROCESS RETURN PUMP STATION P&ID
100DI607	RAS PUMP STATION P&ID
100DI608	WAS PUMP STATION P&ID
100DI609	CLARIFIER P&ID
100DI610	UV DISINFECTION P&ID
100DI611	SOLIDS HANDLING SYSTEM P&ID
100DI612	AERATION BLOWERS P&ID
100DI613	BELT FILTER PRESS P&ID
100DI614	ALUM DOSING SYSTEM P&ID
100DI615	MIXING SYSTEM COMPRESSORS P&ID

PROCESS DRAWINGS

DRAWING NO	DRAWING TITLE
100D001	PROCESS LEGEND, ABBREVIATIONS, AND GENERAL NOTES
100D501	STANDARD DETAILS I
100D502	STANDARD DETAILS II
100D503	STANDARD DETAILS III
100D601	PROCESS FLOW DIAGRAM
100D602	HYDRAULIC PROFILE
100D603	DESIGN CRITERIA
100D604	EQUIPMENT AND VALVE SCHEDULES
200D101	HEADWORKS PLAN
200D301	HEADWORKS SECTIONS
200D701	HEADWORKS ISOMETRIC
400D101	PROCESS BASIN A PLAN
400D102	PROCESS BASIN A PLAN @ EL 289.00'
400D301	PROCESS BASIN A SECTIONS SHEET 1
400D302	PROCESS BASIN A SECTIONS SHEET 2
400D303	PROCESS BASIN A SECTIONS SHEET 3
400D701	PROCESS BASIN ISOMETRIC
500D101	PROCESS BUILDING A UPPER LEVEL PLAN
500D102	PROCESS BUILDING A LOWER LEVEL PLAN
500D301	PROCESS BUILDING A SECTIONS SHEET I
500D302	PROCESS BUILDING A SECTIONS SHEET II
500D303	PROCESS BUILDING A SECTIONS SHEET III
600D101	CLARIFIER A PLAN
600D102	CLARIFIER B PLAN
600D301	CLARIFIER A SECTION
600D701	CLARIFIER ISOMETRIC
650D101	CLARIFIER SPLITTER PLAN AND SECTION
675D101	ALUM FEED TANK AND PUMP SKID PLAN AND SECTION
750D101	UV DISINFECTION PLAN
750D301	UV DISINFECTION SECTION
750D701	UV DISINFECTION ISOMETRIC
775D101	CASCADE AERATION PLAN AND SECTION
800D101	SOLIDS HOLDING BASIN A PLAN
800D301	SOLIDS HOLDING BASIN A SECTIONS SHEET I
800D302	SOLIDS HOLDING BASIN A SECTIONS SHEET II
850D101	SOLIDS HANDLING PLAN
850D301	SOLIDS HANDLING SECTIONS SHEET I
850D302	SOLIDS HANDLING SECTIONS SHEET II
850D701	SOLIDS HANDLING ISOMETRIC

ELECTRICAL DRAWINGS

DRAWING NO	DRAWING TITLE
100E001	ELECTRICAL GENERAL NOTES AND LEGENDS
100E100	ELECTRICAL SITE PLAN
100E101	SCADA SITE PLAN
100E102	SCADA ARCHITECTURE DRAWING
100E103	SPACE ENVIRONMENT AND HAZARDOUS RATINGS SCHEDULE
100E501	ELECTRICAL STANDARD DETAILS SHEET 1
100E502	ELECTRICAL STANDARD DETAILS SHEET 2
100E503	ELECTRICAL STANDARD DETAILS SHEET 3
100E504	ELECTRICAL STANDARD DETAILS SHEET 4
100E505	ELECTRICAL STANDARD DETAILS SHEET 5
100E506	ELECTRICAL STANDARD DETAILS SHEET 6
100E507	DUCTBANK SECTIONS AND DETAILS
100E508	DUCTBANK SECTIONS AND DETAILS
100E509	AREA CLASSIFICATION DETAILS
100E601	500-SWBD-001 ONE-LINE DIAGRAM
100E602	500-MCC-001 ONE-LINE DIAGRAM
100E603	500-PDP-001 ONE-LINE DIAGRAM
100E604	500-LP-001 PANEL SCHEDULE
100E605	750-PDP-001 ONE-LINE DIAGRAM
100E606	750-LP-001 PANEL SCHEDULE
100E607	850-MCC-1 ONE-LINE DIAGRAM
100E608	850-PDP-001 ONE-LINE DIAGRAM
100E609	850-LP-001 PANEL SCHEDULE
100E610	900-PDP-001 ONE-LINE DIAGRAM
100E611	900-LP-001 PANEL SCHEDULE
100E614	SUBMERSIBLE PUMP VFD SCHEMATIC
100E615	CENTRIFUGAL PUMP VFD SCHEMATIC
100E616	CENTRIFUGAL PUMP VFD SCHEMATIC
100E617	PROGRESSIVE CAVITY PUMP VFD SCHEMATIC
100E618	PROGRESSIVE CAVITY PUMP STARTER SCHEMATIC
100E619	CLARIFIER DRIVE MOTOR STARTER SCHEMATIC
100E620	LUMINAIRE SCHEDULE
200E101	HEADWORKS AREA CLASSIFICATION PLAN
200E102	HEADWORKS POWER AND GROUNDING PLAN
200E103	HEADWORKS LIGHTING AND SMALL POWER PLAN
200E104	HEADWORKS INSTRUMENTATION PLAN
400E101	PROCESS BASIN A AREA CLASSIFICATION PLAN
400E102	PROCESS BASIN A POWER PLAN
400E103	PROCESS BASIN A LIGHTING AND SMALL POWER PLAN
400E104	PROCESS BASIN A INSTRUMENTATION PLAN
500E101	PROCESS BUILDING A AREA CLASSIFICATION PLAN
500E102	PROCESS BUILDING A UPPER LEVEL GROUNDING AND POWER PLAN
500E103	PROCESS BUILDING A LOWER LEVEL GROUNDING AND POWER PLAN
500E104	PROCESS BUILDING A UPPER LEVEL LIGHTING AND SMALL POWER PLAN
500E105	PROCESS BUILDING A LOWER LEVEL LIGHTING AND SMALL POWER PLAN
500E106	PROCESS BUILDING A UPPER LEVEL INSTRUMENTATION PLAN
500E107	PROCESS BUILDING A LOWER LEVEL INSTRUMENTATION PLAN
600E101	CLARIFIER A INSTRUMENTATION AND SMALL POWER PLAN
600E102	CLARIFIER B INSTRUMENTATION AND SMALL POWER PLAN
750E101	UV DISINFECTION POWER AND GROUNDING PLAN
750E102	UV DISINFECTION LIGHTING AND SMALL POWER PLAN
750E103	UV DISINFECTION INSTRUMENTATION PLAN
800E101	SOLIDS HOLDING AREA CLASSIFICATION PLAN
800E102	SOLIDS HOLDING BASIN A LIGHTING AND SMALL POWER PLAN
800E103	SOLIDS HOLDING BASIN A INSTRUMENTATION PLAN
850E101	SOLIDS HANDLING BUILDING AREA CLASSIFICATION PLAN
850E102	SOLIDS HANDLING GROUNDING AND POWER PLAN
850E103	SOLIDS HANDLING LIGHTING AND SMALL POWER PLAN
850E104	SOLIDS HANDLING INSTRUMENTATION PLAN

GEORGIA REGISTERED No. PE048949 PROFESSIONAL ENGINEER TRENTON K. HOLLIS

Sealed: June 26th, 2024

no.	date	by	ckd	description
0	6/26/24	TKH	ALW	ISSUED FOR CONSTRUCTION

BURNS McDONNELL
4004 SUMMIT BLVD. NE, SUITE 1200
ATLANTA, GA 30319
770-587-4776
Burns & McDonnell Engineering Co, Inc.
LICENSEE NO. PEF000100
AUTHORIZATION NO. J550903

EAST PERRY WASTEWATER
TREATMENT FACILITY
148538

Index II
100G003

GENERAL SYMBOLOGY

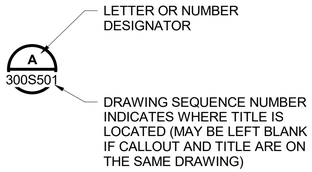

SECTION, DETAIL, AND ELEVATION SYMBOL IDENTIFIERS

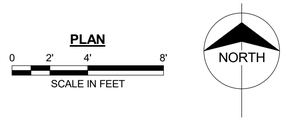

PLAN TITLE

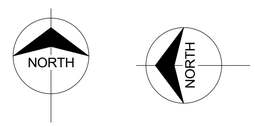

NORTH ARROW

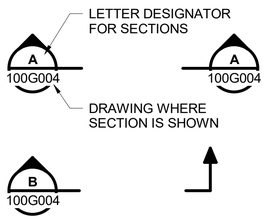

SECTION CALLOUT EXAMPLE

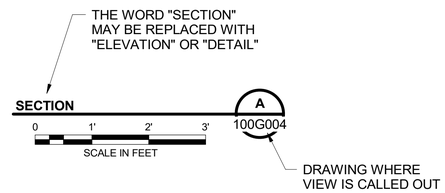

SECTION, DETAIL, OR ELEVATION TITLE EXAMPLE

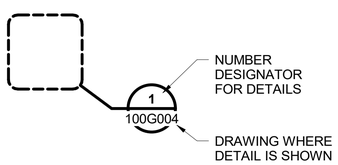

DETAIL CALLOUT EXAMPLE

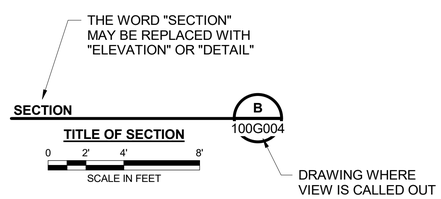

SECTION, DETAIL, OR ELEVATION TITLE WITH ADDITIONAL TITLE TEXT EXAMPLE

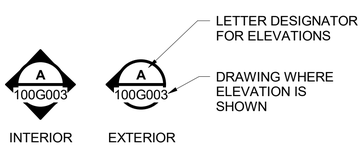

ELEVATION CALLOUT EXAMPLE

DENOTES A REVISION ON A DRAWING

DENOTES A REVISION ON A DRAWING DUE TO A PROCUREMENT MODIFICATION

REVISION TRIANGLES

DRAWING NAMING CONVENTION

STRUCTURE / AREA DESIGNATION

100	SITE DRAWINGS (YARD PIPING, GRADE, ELECT) LEGENDS, GENERAL NOTES, STANDARD DETAILS GENERAL DESIGN CRITERIA P&IDs
200	HEADWORKS
400	PROCESS BASIN A
500	PROCESS BUILDING A
600	SECONDARY CLARIFIERS
650	CLARIFIER SPLITTER
675	ALUM CONTAINMENT
750	UV DISINFECTION
775	CASCADE AERATION
800	SOLIDS HOLDING BASIN A
850	SOLIDS HANDLING
900	ADMINISTRATION TRAILER

DISCIPLINE DESIGNATOR AND DISCIPLINE DRAWING ORDER

G	GENERAL
"X"D	DEMOLITION
C	CIVIL
A	ARCHITECTURAL
S	STRUCTURAL
DI	PROCESS & INSTRUMENTATION
D	PROCESS
M	MECHANICAL
P	PLUMBING
E	ELECTRICAL

DRAWING TYPE DESIGNATOR

0	GENERAL
1	PLANS
2	ELEVATIONS
3	SECTIONS
4	ENLARGED PLANS, ELEVATIONS, OR SECTIONS THAT ARE NOT DETAILS
5	DETAILS
6	SCHEDULES AND DIAGRAMS (P&IDs AND PFDs)
7	3D REPRESENTATIONS (ISOMETRIC, PERSPECTIVE, ETC.)

EXAMPLE

HEADWORKS, STRUCTURAL SECTIONS, DRAWING 02

DRAWING NUMBER: 200S302

- 3-DIGIT STRUCTURE/AREA DESIGNATOR
- DISCIPLINE DESIGNATOR
- DRAWING TYPE DESIGNATOR
- 2-DIGIT SHEET NUMBER

no.	date	by	ckd	description
0	6/26/24	TKH	ALW	ISSUED FOR CONSTRUCTION

BURNS McDONNELL
4004 SUMMIT BLVD. NE, SUITE 1200
ATLANTA, GA 30319
770-587-4776
LICENSEE NO. PEF000100
AUTHORIZATION NO. J550903

date	detailed
FEBRUARY 2, 2023	J. BENTRUP
designed	**checked**
T. HOLLIS	A. WADDOUPS

Perry

HOUSTON COUNTY, GEORGIA

EAST PERRY WWTF
GENERAL LEGEND

project	contract
148538	

drawing **100G004** – rev. **0**

sheet of sheets

file 148538_G_GENERAL LEGEND.rvt

GEORGIA REGISTERED No. PE048949 PROFESSIONAL ENGINEER TRENTON K. HOLLIS

Sealed: June 26th, 2024

LEGEND

EXISTING		NEW
719	MINOR CONTOUR	719
720	MAJOR CONTOUR	720
AC	AIR CONDITIONER	
BM#	BENCHMARK	
	BOREHOLE	
CP1	CONTROL POINT	
	ELECTRIC METER	
	GAS METER	
GV	GAS VALVE	
GA	DOWN GUY	
	FIRE HYDRANT	
PP	POWER POLE	
M.H.	MANHOLE	
	AREA INLET	
	BOLLARD	
	SIGN	
	UTILITY RISER	
WM	WATER METER	
TP	TELEPHONE PEDESTAL	
WV	WATER VALVE	
OHP	OVERHEAD UTILITY	
W	UNDERGROUND WATER	W
G	UNDERGROUND GAS	G
E	UNDERGROUND ELECTRIC	UGE
T	UNDERGROUND TELEPHONE	
X	WIRE FENCE	
XX	BARB WIRE FENCE	XX
	POTABLE WATER	PW
	NON POTABLE WATER	NPW
	RAW WASTEWATER	RWW
	SECONDARY CLARIFIER EFFLUENT	SCE
	SECONDARY CLARIFIER INFLUENT	SCI
	RETURN ACTIVATED SLUDGE	RAS
	WASTE ACTIVATED SLUDGE	WAS
	TREATED EFFLUENT	TE
	SCUM	SCUM
	SCREENED INFLUENT	SI
	DECANT	DCNT
	DRAIN	DRN
	FILTRATE	FLTR
	PROCESS RETURN	PR
	DEWATER FEED	DWTR
	SILT FENCE	
	RIPRAP	
	AGGREGATE SURFACING	
	CONCRETE	
ST	STORM SEWER	ST
SS	SANITARY SEWER (GRAVITY)	SS
SSFM	FORCEMAIN SEWER	SSFM
	STORM/GRAVITY/PRESSURE SEWER GREATER THAN 12"	
	YARD HYDRANT	
	FLOW DIRECTION	
	PROPERTY LINE	
	ROAD CL	
	SLOPE INDICATOR	
	TREE	
	FLOODWAY	
R/W	RIGHT-OF-WAY	
ROW	RIGHT-OF-WAY	
	100-YEAR FLOODPLAIN	
	WETLAND DELINEATION	
U/E	UTILITY EASEMENT	
	DEMO	
	SURFACE WATER	
	DITCH LINE	

ABBREVIATIONS

APPX	APPROXIMATE	DWG	DRAWING	IR	INTERNAL RECYCLE	PW	POTABLE WATER	TBR&R	TO BE REMOVED AND REPLACED
ASPH	ASPHALT	E	EASTING	MAX	MAXIMUM	R	RADIUS	TC	TOP OF CURB
@	AT	EL	ELEVATION	MH	MANHOLE	RAS	RETURN ACTIVATED SLUDGE	TE	TREATED EFFLUENT
BH	BORING	ELEV	ELEVATION	MJ	MECHANICAL JOINT	RCP	REINFORCED CONCRETE PIPE	TOC	TOP OF CONCRETE
BLDG	BUILDING	EOP	END OF PIPE	MIN	MINIMUM	ROW	RIGHT OF WAY	TOW	TOP OF WALL
BM	BENCHMARK	EX	EXISTING	N	NORTHING	RWW	RAW WASTE WATER	TPF	TREATED PEAK FLOW
BOC	BACK OF CURB	FES	FLARED END SECTION	NO	NUMBER	S	SLOPE	TYP	TYPICAL
BTM	BOTTOM	FF	FINISH FLOOR	NPW	NON POTABLE WATER	SAN	SANITARY	UIP	USE IN PLACE
CB	CATCH BASIN	FJ	FLANGE JOINT	NTS	NOT TO SCALE	SCE	SECONDARY CLARIFIER EFFLUENT	UNO	UNLESS NOTED OTHERWISE
CIS	CENTERED IN SLAB	FL	FLOWLINE	OC	ON CENTER	SCI	SECONDARY CLARIFIER INFLUENT	UE	UNDERGROUND ELECTRIC
CIW	CENTERED IN WALL	FOC	FACE OF CURB	PC	POINT OF CURVATURE	SI	SCREENED INFLUENT	W	WATER
CL	CENTERLINE	FPF	FILTERED PEAK FLOW	PE	PLAIN END	SPEC	SPECIFICATION	WAS	WASTE ACTIVATED SLUDGE
CO	CLEAN OUT	FT	FOOT	PFO	PALUSTRINE FORESTED WETLAND	SS	SANITARY SEWER (GRAVITY)	WLD	WELDED
CONC	CONCRETE	FW	FILTER WASTE	PI	POINT OF INTERSECTION	SSFM	SANITARY SEWER FORCE MAIN	WM	WATER METER
CP	CONTROL POINT	G	GAS	PROP	PROPOSED	STM	STORM	WP	WALL PIPE
Ø	DIAMETER	GM	GAS METER	PT	POINT OF TANGENCY	STA	STATION	WV	WATER VALVE
DI	DEGRITTED INFLUENT	GV	GAS VALVE	PVI	POINT OF VERTICAL INTERSECTION	T	TOP		
DIA	DIAMETER	ID	INSIDE DIAMETER	PVMT	PAVEMENT	TBR	TO BE REMOVED		
DIP	DUCTILE IRON PIPE	IN	INCHES						
DND	DO NOT DISTURB	INV	INVERT						

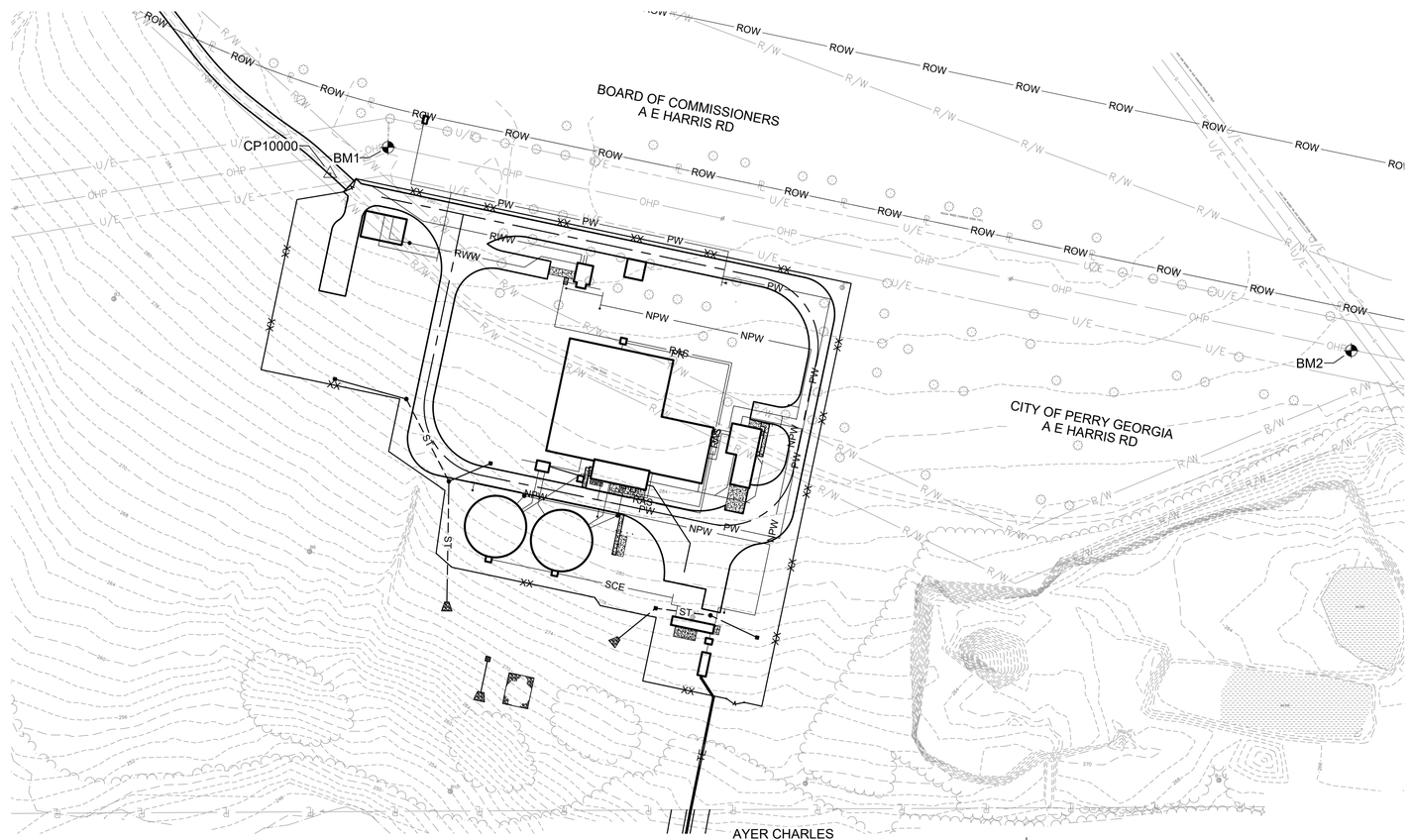

SURVEY AND CONTROLS NOTES:

1. HORIZONTAL DATUM (COORDINATES) SHOWN HEREON ARE IN FEET AND REFERENCED TO THE GEORGIA STATE PLANE, WEST ZONE NORTH AMERICAN DATUM 1983 (NAD83).
2. THE VERTICAL DATUM (ELEVATIONS) SHOWN HEREON ARE IN FEET AND ARE REFERENCED TO NATIONAL AMERICAN VERTICAL DATUM 1988 (NAVD88).
3. TEMPORARY BENCH MARKS:
   A. BM1 - ELEVATION: 292.43, NORTHING: 885246.79, EASTING: 2468038.58.
   B. BM2 - ELEVATION: 287.96, NORTHING: 884975.86, EASTING: 2469321.62.

CONTROL POINT TABLE

POINT #	NORTHING	EASTING	ELEVATION	DESCRIPTION
CP10000	885211.57	2467961.38	288.76	CP10000

SURVEY CONTROL MAP

0 100' 200'
SCALE IN FEET

NORTH

BENCHMARK POINT TABLE

POINT #	NORTHING	EASTING	ELEVATION	DESCRIPTION
BM1	885246.79	2468038.58	292.43	BENCHTIE SET IN POLE
BM2	884975.86	2469321.62	287.96	BENCHTIE SET IN POLE

GEORGIA REGISTERED No. PE051692 PROFESSIONAL ENGINEER MICHAEL CANULL

2024.06.26 15:42:01-05'00'

no.	date	by	ckd	description
0	6/26/24	MJC	JLG	ISSUED FOR CONSTRUCTION

BURNS McDONNELL
4004 SUMMIT BLVD. NE, SUITE 1200
ATLANTA, GA 30319
770-587-4776
LICENSEE NO. PEF000100
AUTHORIZATION NO. J550903

date	detailed
MARCH 13, 2023	M. ELENGEBAWY
designed	checked
M. CANULL	J. GARDER

Perry

HOUSTON COUNTY, GEORGIA

EAST PERRY WWTF

LEGEND, ABBREVIATIONS, AND SURVEY CONTROL

project 148538 | contract

drawing **100C001** – rev. **0**

sheet of sheets

file 148538C001_LEGENDABBREV.DWG

Z:\CLIENTS\WTR\PERRYGA\148538_EASTWWTP\DESIGN\CADD\CIVIL\PROD_DWGS\148538C001_LEGENDABBREV.DWG 6/25/2024 2:44 PM MTOOLEN

GENERAL NOTES:

1. THESE NOTES APPLY TO ALL CIVIL DRAWINGS.
2. TOPOGRAPHIC SURVEY WAS PERFORMED BY CARTER & SLOOPE CONSULTING ENGINEERS IN 2022 AND 2023.
3. ALL ELEVATIONS SHOWN ARE TOP OF FINISHED GRADE, TOP OF PAVEMENT, OR TOP OF AGGREGATE UNLESS NOTED OTHERWISE.
4. ALL DIMENSIONS ARE IN FEET (FT) UNLESS OTHERWISE INDICATED.
5. BUILDING AND STRUCTURE CONTROL POINTS INDICATED ON SITE PLANS ARE TO OUTSIDE OF WALL UNLESS NOTED OTHERWISE.
6. PROVIDE UNIFORM SLOPE BETWEEN INDICATED ELEVATIONS SO THAT ALL AREAS SLOPE TO DRAIN AND NO STORMWATER IS PONDED ON SITE BOTH DURING AND AFTER CONSTRUCTION.
7. ALL AREAS DISTURBED BY CONSTRUCTION NOT DESIGNATED TO RECEIVE SURFACING SHALL BE SEEDED.
8. EXISTING UNDERGROUND UTILITIES ARE SHOWN ON CONTRACT DRAWINGS USING THE BEST INFORMATION AVAILABLE AT THE TIME OF DRAWING PREPARATION. IT IS THE RESPONSIBILITY OF THE CONTRACTOR TO IDENTIFY, LOCATE AND PROTECT ALL UNDERGROUND UTILITIES WHICH MAY BE AFFECTED BY CONSTRUCTION UNDER THIS CONTRACT BEFORE STARTING EXCAVATION OR OTHER SITE CONSTRUCTION ACTIVITIES WHICH COULD DAMAGE EXISTING UTILITIES. ALL UTILITIES LOCATED SHALL BE INDICATED ON THE "AS-BUILT" DRAWINGS.
9. DEMOLITION SHALL BE COORDINATED WITH OWNER PRIOR TO COMMENCING ANY DEMOLITION, EXCAVATION, OR CONSTRUCTION.
10. ALL VALVES, FITTINGS, MANHOLES, ETC. HAVE BEEN LOCATED IN PLAN AND DIMENSIONS SHOWN SHALL BE STRICTLY ADHERED TO UNLESS OTHERWISE DIRECTED BY THE OWNER'S REPRESENTATIVE. PROFILE STATIONING SHALL BE ADJUSTED AS REQUIRED TO CONFORM TO PLAN DIMENSIONS.
11. CONTRACTOR SHALL TAKE ALL NECESSARY PRECAUTIONS TO PROTECT EXISTING UTILITIES AND TO MAINTAIN UNINTERRUPTED UTILITY SERVICE. ANY DAMAGE INCURRED SHALL BE REPAIRED IMMEDIATELY TO THE SATISFACTION OF THE OWNER AT THE CONTRACTOR'S EXPENSE. THE CONTRACTOR SHALL NOTIFY THE OWNER'S REPRESENTATIVE A MINIMUM OF 15 DAYS IN ADVANCE OF ANY NECESSARY UTILITY OUTAGES.
12. THE CONTRACTOR'S LAYDOWN AREA SHALL BE AT THE DIRECTION OF THE OWNER, AND AS INDICATED ON SHEET 100C100.
13. CONTRACTOR SHALL COORDINATE ALL WORK WITH THAT OF THE OWNER AND ANY CONTRACTORS WORKING IN THE AREA.
14. NEW UTILITY STAKEOUT DIMENSIONS ARE TO CENTERLINE OF STRUCTURE AND CENTERLINE OF PIPE, UNLESS INDICATED OTHERWISE.
15. CONTRACTOR SHALL FURNISH, INSTALL, CONSTRUCT, AND MAINTAIN TEMPORARY MEASURES TO CONTROL EROSION AND MINIMIZE THE SILTATION OF INTERMITTENT STREAMS AND THE POLLUTION OF PRIVATE PROPERTIES. TEMPORARY EROSION AND SEDIMENT CONTROL MEASURES SHALL BE CONSTRUCTED IN SUBSTANTIAL COMPLIANCE WITH LOCAL, STATE, FEDERAL, AND JURISDICTIONAL AGENCY'S REGULATIONS, CONTRACT DRAWINGS, AND THE STORMWATER POLLUTION PREVENTION PLAN (SWPPP). TEMPORARY EROSION AND SEDIMENT CONTROL MEASURES SHALL BE MAINTAINED UNTIL COMPLETION OF THE WORK.
16. ALL YARD PIPING BENDS ARE HORIZONTAL UNLESS NOTED OTHERWISE.
17. FOR ALL ACCEPTABLE DECANT, DRAIN, SCUM, ST, OR 30" TE PIPE TYPES, REFERENCE SPEC SECTION 333113. FOR ALL OTHER ACCEPTABLE PIPE TYPES, REFERENCE SPEC SECTION 331100.
18. ALL GRAVITY PIPING SHOWN ON YARD PIPING SHEETS ARE LABELED DECANT, DRAIN, SCUM, ST, OR 30" TE. ALL PRESSURE PIPING SHOWN ON YARD PIPING SHEETS ARE LABELED ALUM, BACKWASH, DWTR, FLTR, NPW, PR, PW, RAS, RWW, SCE, SCI, SI, TE, AND WAS.
19. WETLAND DELINEATIONS SHOWN ON SHEETS 100CD102 AND 100C130 THRU 100C133 WERE IMPORTED FROM AN APPROVED, FORMAL U.S. ARMY CORPS OF ENGINEERS WETLAND DELINEATION CONDUCTED BY BURNS & MCDONNELL.

FLOODPLAIN NOTES:

1. A PORTION OF THIS PROJECT LIES WITHIN THE 100-YEAR FLOODPLAIN (ZONE A). THE 100-YEAR FLOODPLAIN LIMITS SHOWN ON SHEETS 100CD102, 100C130, AND 100C133 WERE IMPORTED FROM FEDERAL EMERGENCY MANAGEMENT AGENCY NATIONAL FLOOD HAZARD LAYER DATA.
2. THIS INFORMATION IS SHOWN ON THE FLOOD INSURANCE RATE MAPS PREPARED BY THE FEDERAL EMERGENCY MANAGEMENT AGENCY FOR THE CITY OF PERRY, HOUSTON COUNTY, GEORGIA, COMMUNITY NO. 130247, MAP NO 13153C0200E, EFFECTIVE SEPTEMBER 28, 2007.
3. NO FILL SHALL BE PLACED WITHIN THE LIMITS OF THE ZONE A FLOODPLAIN.
4. EXCAVATION AND BACKFILL WITHIN THE FLOODPLAIN ZONE SHALL BE COMPLETED IN ACCORDANCE WITH THE US ARMY CORPS OF ENGINEERS REQUIREMENTS.
5. PRIOR TO BEGINNING CONSTRUCTION, THE ENTIRETY OF THE 100-YEAR FLOODPLAIN SHALL BE STAKED AT A MINIMUM EVERY 50-FEET WITHIN THE PROJECT EXTENTS. STAKING SHALL REMAIN IN PLACE AND BE MAINTAINED UNTIL CONSTRUCTION HAS COMPLETED.

GEORGIA REGISTERED No. PE051692 PROFESSIONAL ENGINEER MICHAEL CANULL

2024.06.26 15:42:01-05'00'

no.	date	by	ckd	description
0	6/26/24	MJC	JLG	ISSUED FOR CONSTRUCTION

BURNS McDONNELL
4004 SUMMIT BLVD. NE, SUITE 1200
ATLANTA, GA 30319
770-587-4776
LICENSEE NO. PEF000100
AUTHORIZATION NO. J550903

date	detailed
MARCH 13, 2023	M. ELENGEBAWY
designed	checked
M. CANULL	J. GARDER

Perry
HOUSTON COUNTY, GEORGIA

EAST PERRY WWTF
GENERAL NOTES

project 148538 | contract

drawing **100C002** – rev. **0**

sheet of sheets

file 148538C001_LEGENDABBREV.DWG

GENERAL NOTES:

1. LAYDOWN AREA PER CONTRACTOR.

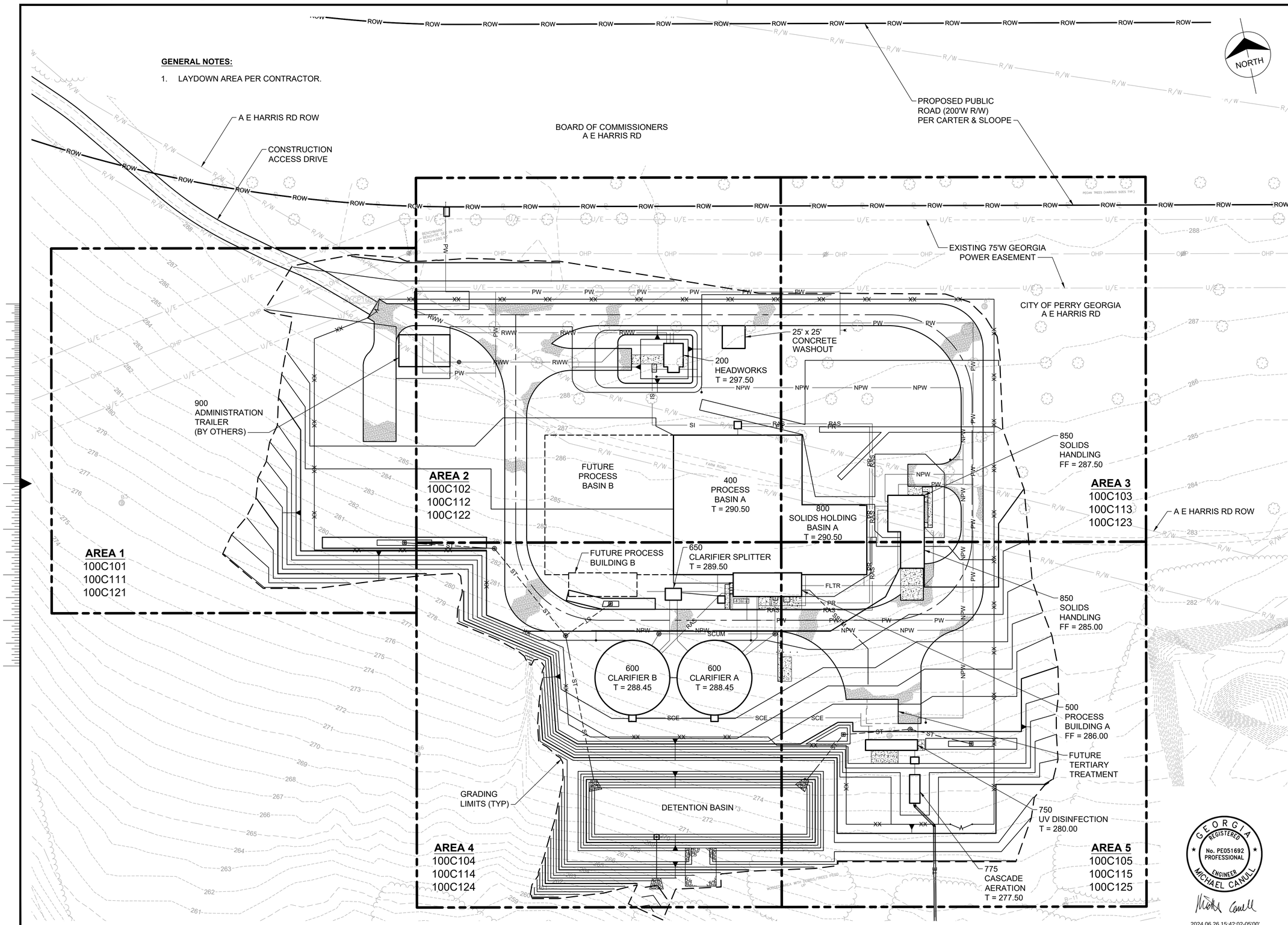

OVERALL SITE PLAN

0 50' 100'

SCALE IN FEET

no.	date	by	ckd	description
0	6/26/24	MJC	JLG	ISSUED FOR CONSTRUCTION

BURNS McDONNELL
4004 SUMMIT BLVD. NE, SUITE 1200
ATLANTA, GA 30319
770-587-4776
LICENSEE NO. PEF000100
AUTHORIZATION NO. J550903

date	detailed
MARCH 13, 2023	M. ELENGEBAWY
designed	checked
M. CANULL	J. GARDER

Perry

HOUSTON COUNTY, GEORGIA

GEORGIA REGISTERED No. PE051692 PROFESSIONAL ENGINEER MICHAEL CANULL

2024.06.26 15:42:02-05'00'

EAST PERRY WWTF

OVERALL SITE PLAN

project	contract
148538	

drawing **100C100 –** rev. **0**

sheet of sheets

file 148538_C100-OVERALL SITE PLAN.DWG

Z:\CLIENTS\WTR\PERRYGA\148538_EASTWWTP\DESIGN\CADD\CIVIL\PROD_DWGS\148538_C100-OVERALL SITE PLAN.DWG 6/20/2024 1:29 PM MTOOLEN

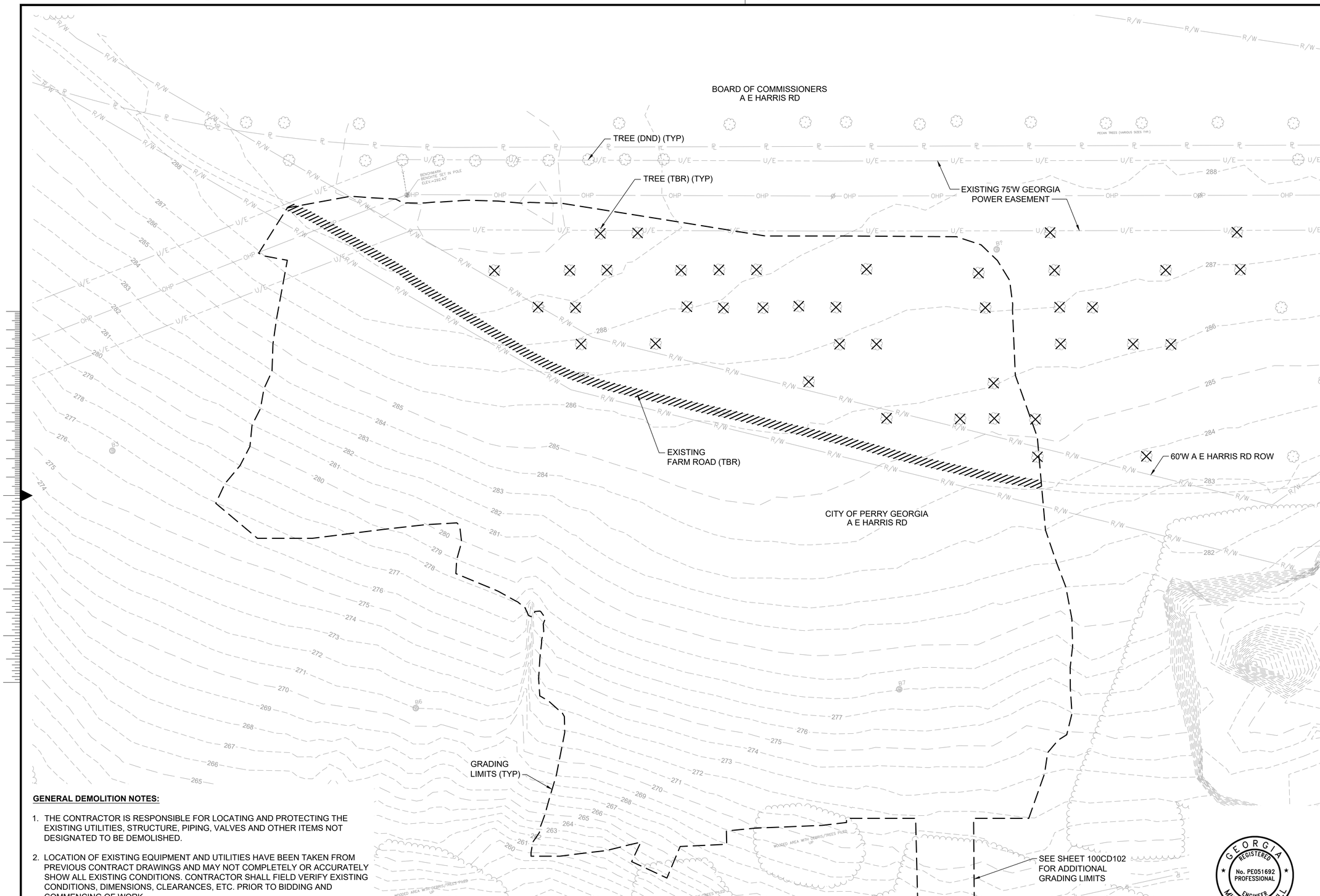

GENERAL DEMOLITION NOTES:

1. THE CONTRACTOR IS RESPONSIBLE FOR LOCATING AND PROTECTING THE EXISTING UTILITIES, STRUCTURE, PIPING, VALVES AND OTHER ITEMS NOT DESIGNATED TO BE DEMOLISHED.
2. LOCATION OF EXISTING EQUIPMENT AND UTILITIES HAVE BEEN TAKEN FROM PREVIOUS CONTRACT DRAWINGS AND MAY NOT COMPLETELY OR ACCURATELY SHOW ALL EXISTING CONDITIONS. CONTRACTOR SHALL FIELD VERIFY EXISTING CONDITIONS, DIMENSIONS, CLEARANCES, ETC. PRIOR TO BIDDING AND COMMENCING OF WORK.
3. SEE SUMMARY OF WORK FOR CONSTRUCTION PHASING REQUIREMENTS.
4. ALL TREES NOT MARKED FOR REMOVAL SHALL BE PROTECTED.
5. ALL TREES MARKED FOR REMOVAL SHALL BE REMOVED AND PROPERLY DISPOSED OF BY CONTRACTOR.

CIVIL DEMOLITION PLAN

0 50' 100'
SCALE IN FEET

GEORGIA REGISTERED No. PE051692 PROFESSIONAL ENGINEER MICHAEL CANULL

2024.06.26 15:42:02-05'00'

no.	date	by	ckd	description
0	6/26/24	MJC	JLG	ISSUED FOR CONSTRUCTION

BURNS McDONNELL
4004 SUMMIT BLVD. NE, SUITE 1200
ATLANTA, GA 30319
770-587-4776
LICENSEE NO. PEF000100
AUTHORIZATION NO. J550903

date	detailed
MARCH 13, 2023	M. ELENGEBAWY
designed	checked
M. CANULL	J. GARDER

Perry
HOUSTON COUNTY, GEORGIA

EAST PERRY WWTF

CIVIL DEMOLITION PLAN
SHEET 1

project 148538
contract
drawing **100CD101**
rev. **0**
sheet of sheets
file 148538CD100_DEMOLITION PLAN.DWG

Z:\CLIENTS\WTR\PERRYGA\148538_EASTWWTP\DESIGN\CADD\CIVIL\PROD_DWGS\148538CD100_DEMOLITION PLAN.DWG 6/18/2024 2:03 PM MTOOLEN

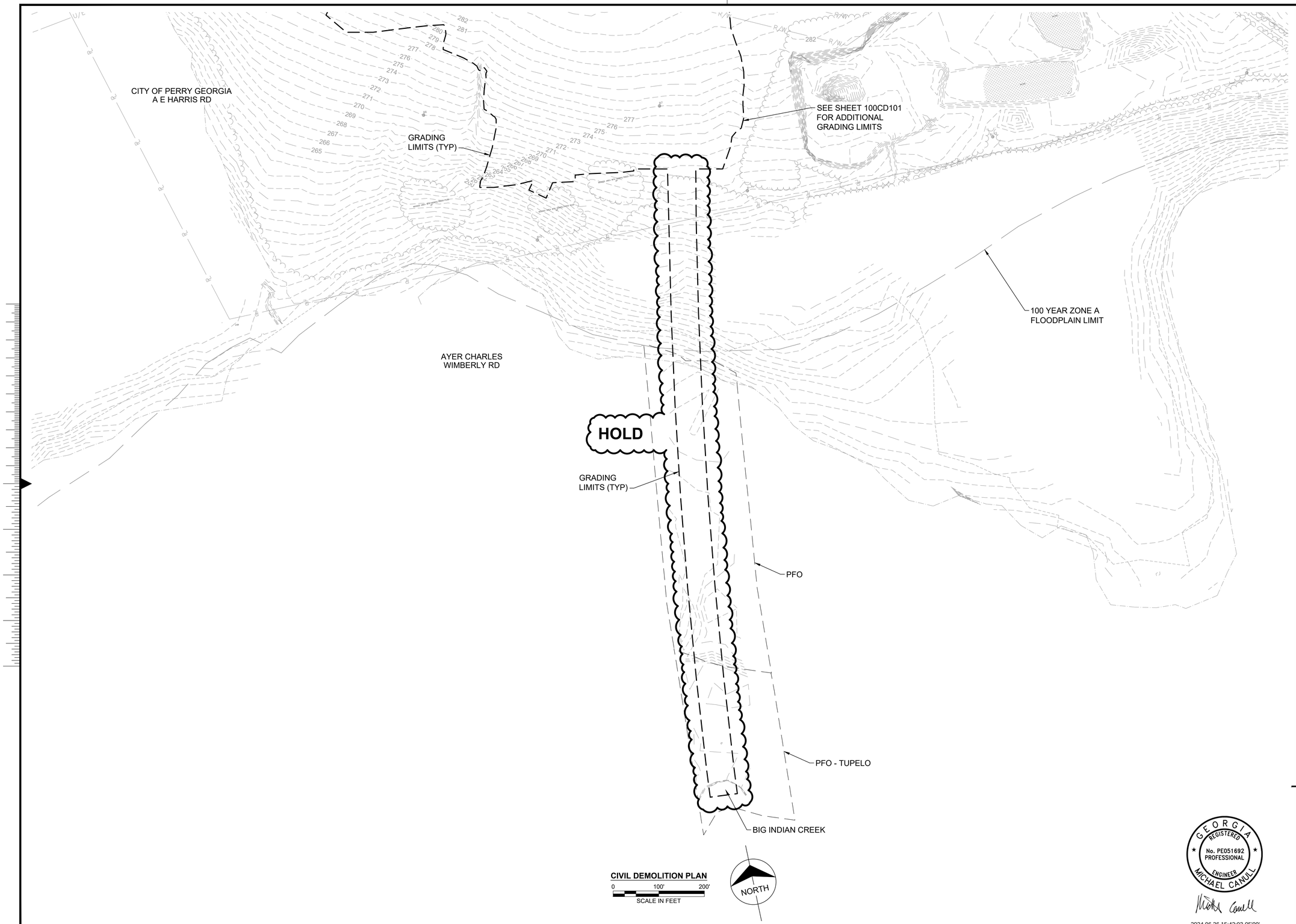

CIVIL DEMOLITION PLAN

0 100' 200'
SCALE IN FEET

no.	date	by	ckd	description
0	6/26/24	MJC	JLG	ISSUED FOR CONSTRUCTION

BURNS McDONNELL
4004 SUMMIT BLVD. NE, SUITE 1200
ATLANTA, GA 30319
770-587-4776
LICENSEE NO. PEF000100
AUTHORIZATION NO. J550903

date	detailed
MARCH 13, 2023	M. ELENGEBAWY
designed	checked
M. CANULL	J. GARDER

Perry
HOUSTON COUNTY, GEORGIA

GEORGIA REGISTERED No. PE051692 PROFESSIONAL ENGINEER MICHAEL CANULL

2024.06.26 15:42:03-05'00'

EAST PERRY WWTF

CIVIL DEMOLITION PLAN
SHEET 2

project	contract
148538	

drawing **100CD102–** rev. **0**

sheet of sheets

file 148538CD100_DEMOLITION PLAN.DWG

Z:\CLIENTS\WTR\PERRYGA\148538_EASTWWTP\DESIGN\CADD\CIVIL\PROD_DWGS\148538CD100_DEMOLITION PLAN.DWG 6/18/2024 2:03 PM MTOOLEN

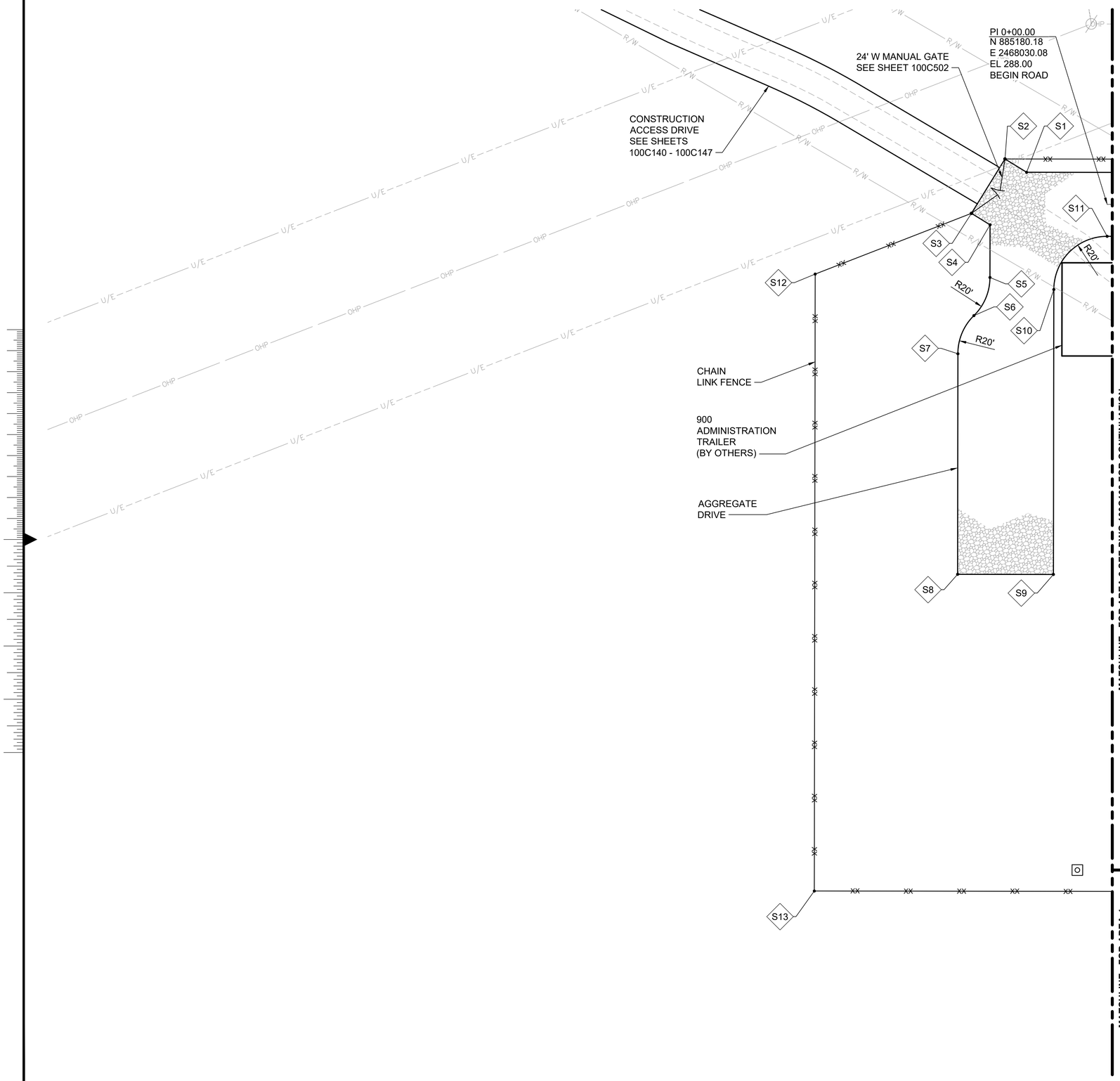

SITE PLAN POINT TABLE

POINT NO	NORTHING	EASTING	ELEV	DESCRIPTION
S1	885198.19	2468002.93	288.47	CORNER OF AGGREGATE DRIVE
S2	885204.76	2467996.01	288.55	CORNER OF AGGREGATE DRIVE/GATE POST
S3	885187.36	2467979.48	288.11	CORNER OF AGGREGATE DRIVE/GATE POST
S4	885181.71	2467985.43	288.04	CORNER OF AGGREGATE DRIVE
S5	885162.38	2467981.34	287.99	EDGE OF AGGREGATE DRIVE
S6	885149.59	2467972.50	287.80	EDGE OF AGGREGATE DRIVE
S7	885136.80	2467963.67	287.62	EDGE OF AGGREGATE DRIVE
S8	885055.77	2467946.54	287.07	CORNER OF AGGREGATE DRIVE
S9	885048.33	2467981.76	287.07	CORNER OF AGGREGATE DRIVE
S10	885153.01	2468003.89	288.00	EDGE OF AGGREGATE DRIVE
S11	885168.44	2468027.60	288.10	EDGE OF AGGREGATE DRIVE
S12	885177.10	2467917.34	287.86	CORNER OF FENCE
S13	884950.45	2467869.42	285.00	CORNER OF FENCE

NORTH

0 20' 40'
SCALE IN FEET

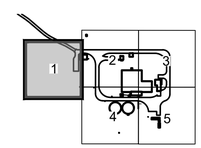

KEY MAP

GEORGIA REGISTERED No. PE051692 PROFESSIONAL ENGINEER MICHAEL CANULL

2024.06.26 15:42:04-05'00'

no.	date	by	ckd	description
0	6/26/24	MJC	JLG	ISSUED FOR CONSTRUCTION

BURNS McDONNELL
4004 SUMMIT BLVD. NE, SUITE 1200
ATLANTA, GA 30319
770-587-4776
LICENSEE NO. PEF000100
AUTHORIZATION NO. J550903

date	detailed
MARCH 13, 2023	M. ELENGEBAWY
designed	checked
M. CANULL	J. GARDER

Perry
HOUSTON COUNTY, GEORGIA

EAST PERRY WWTF
SITE PLAN
AREA 1

project 148538
contract

drawing **100C101** rev. **0**

sheet of sheets

file 148538C100_SITE PLANS.DWG

Z:\CLIENTS\WTR\PERRYGA\148538_EASTWWTP\DESIGN\CADD\CIVIL\PROD_DWGS\148538C100_SITE PLANS.DWG 6/18/2024 3:29 PM MTOOLEN

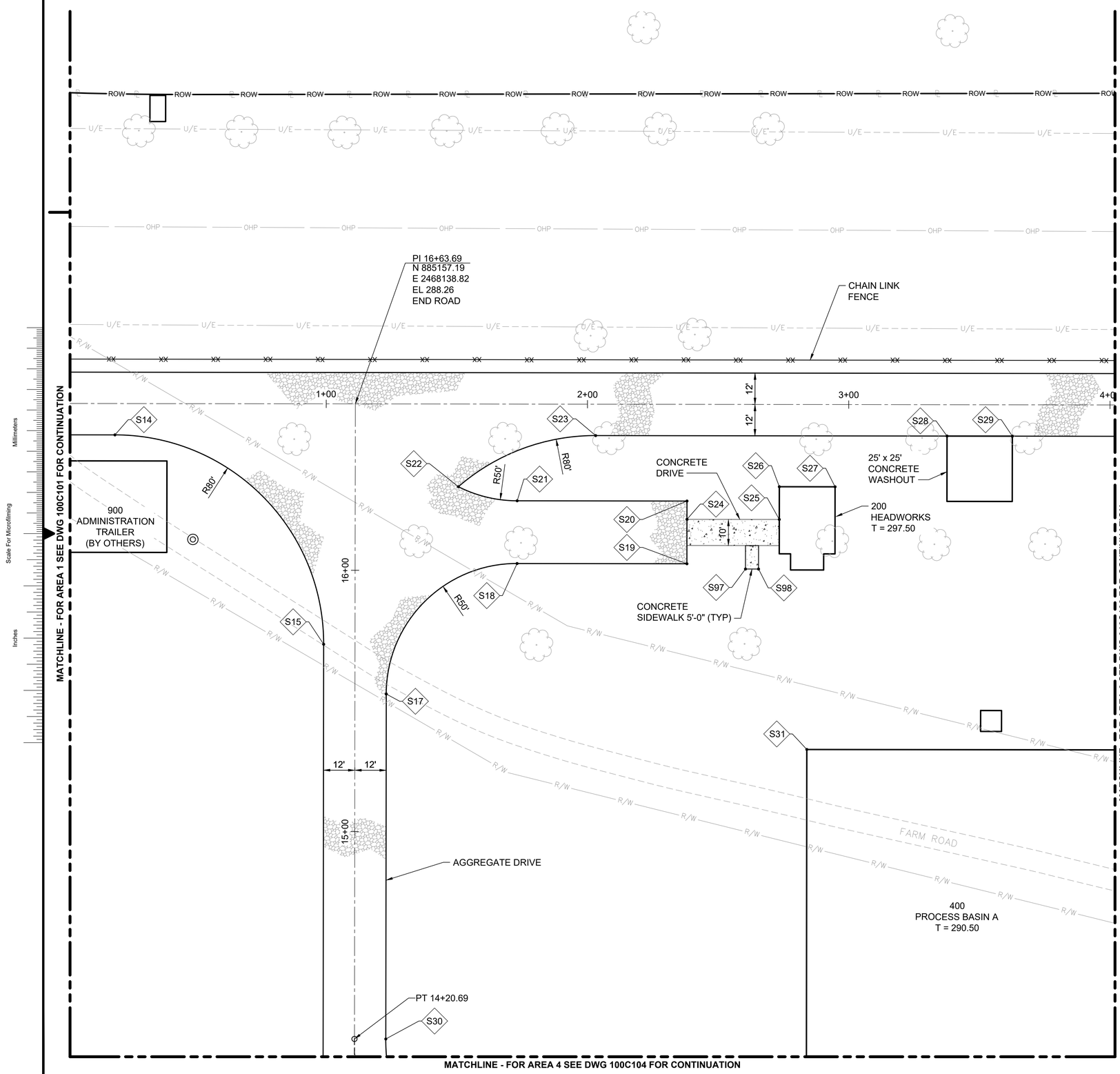

SITE PLAN POINT TABLE

POINT NO	NORTHING	EASTING	ELEV	DESCRIPTION
S14	885164.48	2468046.33	288.12	EDGE OF AGGREGATE DRIVE
S15	885069.66	2468108.05	287.21	EDGE OF AGGREGATE DRIVE
S17	885046.11	2468127.60	287.02	EDGE OF AGGREGATE DRIVE
S18	885084.69	2468186.86	288.00	EDGE OF AGGREGATE DRIVE
S19	885071.24	2468250.46	290.60	CORNER OF AGGREGATE DRIVE
S20	885094.72	2468255.42	290.60	CORNER OF AGGREGATE DRIVE
S21	885108.17	2468191.83	288.00	EDGE OF AGGREGATE DRIVE
S22	885118.06	2468170.91	288.00	EDGE OF AGGREGATE DRIVE
S23	885126.42	2468226.35	288.00	EDGE OF AGGREGATE DRIVE
S24	885087.87	2468253.97	290.60	CORNER OF CONCRETE DRIVE
S25	885080.56	2468288.54	291.50	CORNER OF CONCRETE DRIVE
S26	885092.82	2468291.13	297.50	CORNER OF HEADWORKS
S27	885088.40	2468312.00	297.50	CORNER OF HEADWORKS
S28	885098.60	2468357.93	288.00	CORNER OF CONCRETE WASHOUT DRIVE
S29	885093.43	2468382.39	287.93	CORNER OF CONCRETE WASHOUT DRIVE
S30	884916.97	2468100.30	285.57	EDGE OF AGGREGATE DRIVE
S31	884992.26	2468280.77	290.50	CORNER OF PROCESS BASIN
S97	885064.67	2468271.98	291.50	CORNER OF CONCRETE WALK
S98	885063.63	2468276.87	291.50	CORNER OF CONCRETE WALK

NORTH

0 20' 40'
SCALE IN FEET

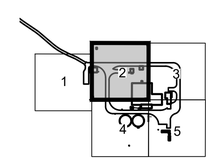

KEY MAP

GEORGIA REGISTERED No. PE051692 PROFESSIONAL ENGINEER MICHAEL CANULL

2024.06.26 15:42:04-05'00'

no.	date	by	ckd	description
0	6/26/24	MJC	JLG	ISSUED FOR CONSTRUCTION

BURNS McDONNELL
4004 SUMMIT BLVD. NE, SUITE 1200
ATLANTA, GA 30319
770-587-4776
LICENSEE NO. PEF000100
AUTHORIZATION NO. J550903

date	detailed
MARCH 13, 2023	M. ELENGEBAWY
designed	checked
M. CANULL	J. GARDER

Perry

HOUSTON COUNTY, GEORGIA

EAST PERRY WWTF
SITE PLAN
AREA 2

project 148538
contract

drawing **100C102** rev. **0**

sheet of sheets

file 148538C100_SITE PLANS.DWG

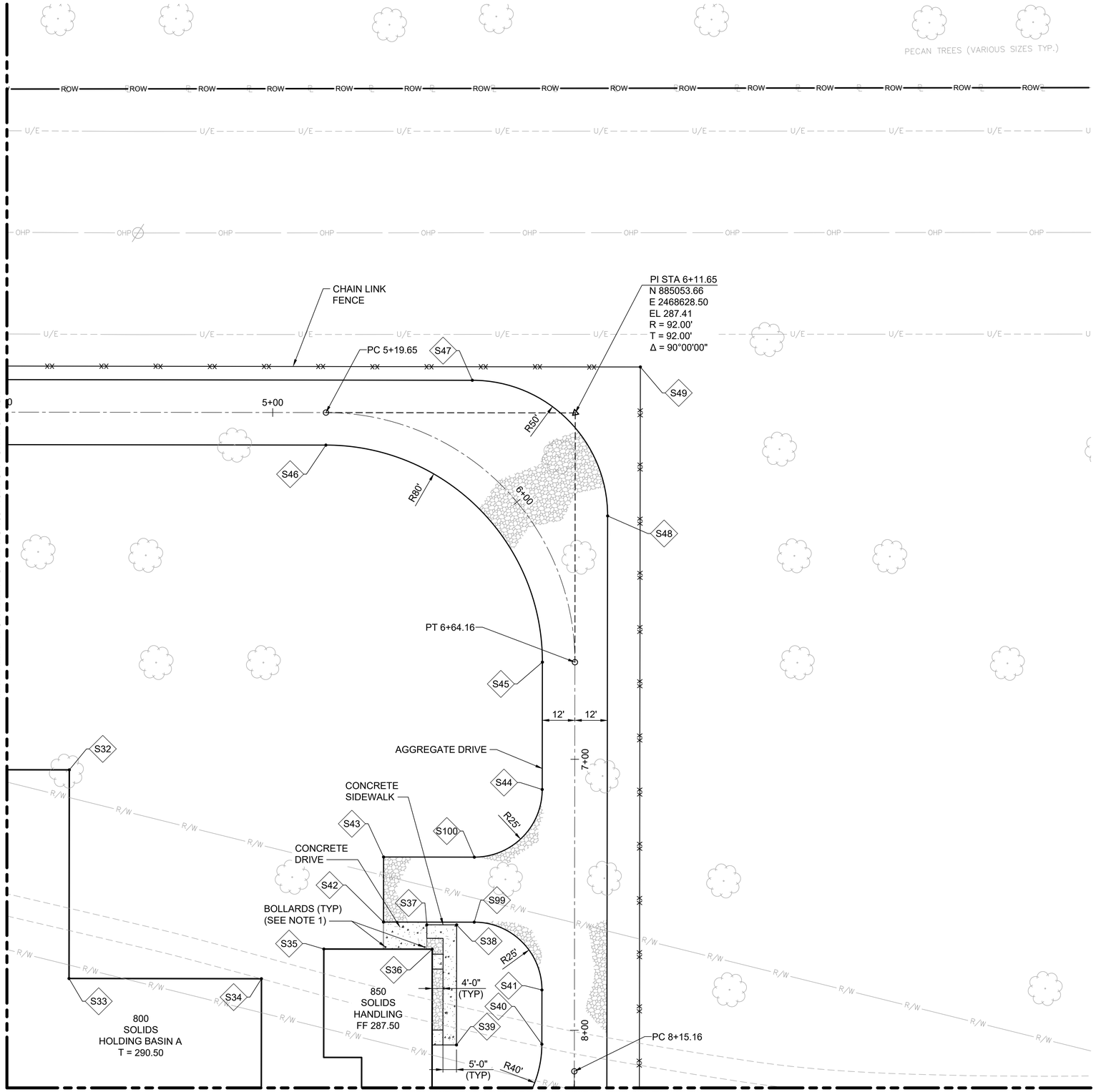

SITE PLAN POINT TABLE

POINT NO	NORTHING	EASTING	ELEV	DESCRIPTION
S32	884963.09	2468418.72	290.50	CORNER OF PROCESS BASIN
S33	884887.76	2468402.80	290.50	CORNER OF SOLIDS HOLDING
S34	884873.07	2468472.26	290.50	CORNER OF SOLIDS HOLDING
S35	884879.08	2468497.04	287.50	CORNER OF SOLIDS HANDLING BUILDING
S36	884870.80	2468536.17	287.50	CORNER OF SOLIDS HANDLING BUILDING
S37	884880.02	2468536.08	287.31	CORNER OF CONCRETE WALK
S38	884877.74	2468546.84	287.31	CORNER OF CONCRETE WALK
S39	884834.37	2468537.67	287.31	CORNER OF CONCRETE WALK
S40	884828.17	2468568.56	286.66	EDGE OF AGGREGATE DRIVE
S41	884847.75	2468572.69	286.66	EDGE OF AGGREGATE DRIVE
S42	884884.31	2468520.63	287.29	CORNER OF AGGREGATE DRIVE
S43	884907.79	2468525.60	287.09	CORNER OF AGGREGATE DRIVE
S44	884920.15	2468588.00	286.33	EDGE OF AGGREGATE DRIVE
S45	884966.13	2468597.72	286.56	EDGE OF AGGREGATE DRIVE
S46	885060.95	2468536.00	287.54	EDGE OF AGGREGATE DRIVE
S47	885073.26	2468593.80	287.60	EDGE OF AGGREGATE DRIVE
S48	885014.00	2468632.38	287.11	EDGE OF AGGREGATE DRIVE
S49	885065.33	2468655.49	287.62	CORNER OF FENCE
S99	884877.38	2468553.40	287.15	EDGE OF AGGREGATE DRIVE
S100	884900.87	2468558.37	286.80	EDGE OF AGGREGATE DRIVE

SITE PLAN NOTES:

1. REFERENCE THE TYPICAL TOP MOUNTED BOLLARD DETAIL ON STRUCTURAL STANDARD DETAIL SHEET UNO. CONTRACTOR SHALL LOCATE CENTER OF BOLLARD 0'-9" FROM EDGE OF BUILDING AND 0'-3" FROM EDGE OF GARAGE DOOR OPENING AS IDENTIFIED ON SITE PLAN SHEETS (TYP UNO).
2. SEE STRUCTURAL STANDARD DETAIL SHEETS FOR DOOR STOOPS AND DRIVEWAY APPROACHES (TYP).
3. SEE STRUCTURAL SHEETS FOR FOUNDATION PADS AND CONCRETE PADS AS INDICATED (TYP).

NORTH

0 20' 40'
SCALE IN FEET

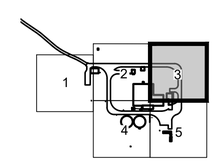

KEY MAP

GEORGIA REGISTERED No. PE051692 PROFESSIONAL ENGINEER MICHAEL CANULL

2024.06.26 15:42:04-05'00'

no.	date	by	ckd	description
0	6/26/24	MJC	JLG	ISSUED FOR CONSTRUCTION

BURNS McDONNELL
4004 SUMMIT BLVD. NE, SUITE 1200
ATLANTA, GA 30319
770-587-4776
LICENSEE NO. PEF000100
AUTHORIZATION NO. J550903

date	detailed
MARCH 13, 2023	M. ELENGEBAWY
designed	checked
M. CANULL	J. GARDER

Perry
HOUSTON COUNTY, GEORGIA

EAST PERRY WWTF
SITE PLAN
AREA 3

project 148538
contract
drawing **100C103** rev. **0**
sheet of sheets
file 148538C100_SITE PLANS.DWG

Z:\CLIENTS\WTR\PERRYGA\148538_EASTWWTP\DESIGN\CADD\CIVIL\PROD_DWGS\148538C100_SITE PLANS.DWG 6/18/2024 3:29 PM MTOOLEN

MATCHLINE - FOR AREA 2 SEE DWG 100C102 FOR CONTINUATION

MATCHLINE - FOR AREA 1 SEE DWG 100C101 FOR CONTINUATION

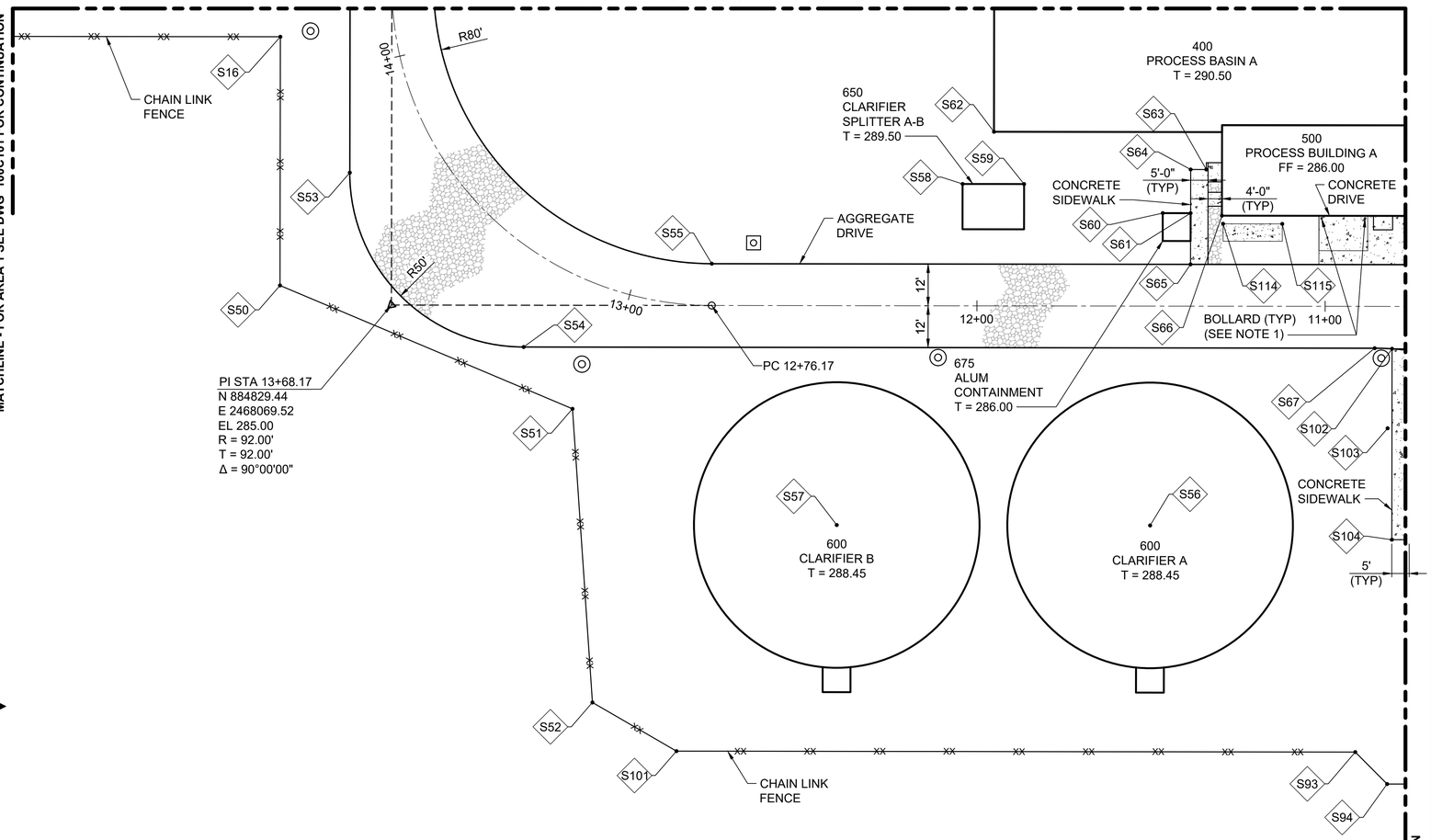

MATCHLINE - FOR AREA 5 SEE DWG 100C105 FOR CONTINUATION

SITE PLAN POINT TABLE

POINT NO	NORTHING	EASTING	ELEV	DESCRIPTION
S16	884911.39	2468054.14	285.00	CORNER OF FENCE
S50	884841.51	2468039.37	285.00	CORNER OF FENCE
S51	884789.58	2468114.30	283.52	CORNER OF FENCE
S52	884705.87	2468102.58	279.58	CORNER OF FENCE
S53	884869.10	2468065.64	285.22	EDGE OF AGGREGATE DRIVE
S54	884809.84	2468104.22	285.00	EDGE OF AGGREGATE DRIVE
S55	884822.15	2468162.02	285.18	EDGE OF AGGREGATE DRIVE
S56	884722.70	2468269.78	--	CENTER OF CLARIFIER A
S57	884741.32	2468181.72	--	CENTER OF CLARIFIER B
S58	884829.76	2468237.22	289.50	CORNER OF CLARIFIER SPLITTER A-B
S59	884826.10	2468254.50	289.50	CORNER OF CLARIFIER SPLITTER A-B
S60	884809.75	2468291.76	286.00	CORNER OF ALUM CONTAINMENT PAD EP-4
S61	884808.09	2468299.58	286.00	CORNER OF ALUM CONTAINMENT PAD EP-4
S62	884842.57	2468249.12	290.50	CORNER OF PROCESS BASIN A
S63	884819.43	2468306.58	286.00	CORNER OF CONCRETE WALK
S64	884820.36	2468302.18	286.00	CORNER OF CONCRETE WALK
S65	884793.70	2468296.54	285.59	CORNER OF CONCRETE WALK
S66	884805.54	2468308.24	286.00	CORNER OF PROCESS BUILDING
S67	884759.28	2468343.35	285.00	EDGE OF AGGREGATE DRIVE
S93	884646.90	2468314.06	281.21	CORNER OF FENCE
S94	884636.05	2468321.13	279.50	CORNER OF FENCE
S101	884687.23	2468123.32	274.94	CORNER OF FENCE
S102	884758.09	2468348.21	284.99	CORNER OF CONCRETE WALK
S103	884736.00	2468342.26	283.88	BOLLARD
S104	884704.43	2468336.86	284.00	CORNER OF CONCRETE WALK
S114	884803.19	2468309.09	286.50	CORNER OF MAU PAD EP-4
S115	884799.67	2468324.72	286.50	CORNER OF MAU PAD EP-4

NORTH

0 20' 40'
SCALE IN FEET

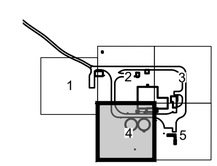

KEY MAP

GEORGIA REGISTERED No. PE051692 PROFESSIONAL ENGINEER MICHAEL CANULL

2024.06.26 15:42:05-05'00'

no.	date	by	ckd	description
0	6/26/24	MJC	JLG	ISSUED FOR CONSTRUCTION

BURNS McDONNELL
4004 SUMMIT BLVD. NE, SUITE 1200
ATLANTA, GA 30319
770-587-4776
LICENSEE NO. PEF000100
AUTHORIZATION NO. J550903

date	detailed
MARCH 13, 2023	M. ELENGEBAWY
designed	checked
M. CANULL	J. GARDER

Perry

HOUSTON COUNTY, GEORGIA

EAST PERRY WWTF
SITE PLAN
AREA 4

project 148538
contract

drawing **100C104 –** rev. **0**

sheet of sheets

file 148538C100_SITE PLANS.DWG

Z:\CLIENTS\WTR\PERRYGA\148538_EASTWWTP\DESIGN\CADD\CIVIL\PROD_DWGS\148538C100_SITE PLANS.DWG 6/18/2024 3:29 PM MTOOLEN

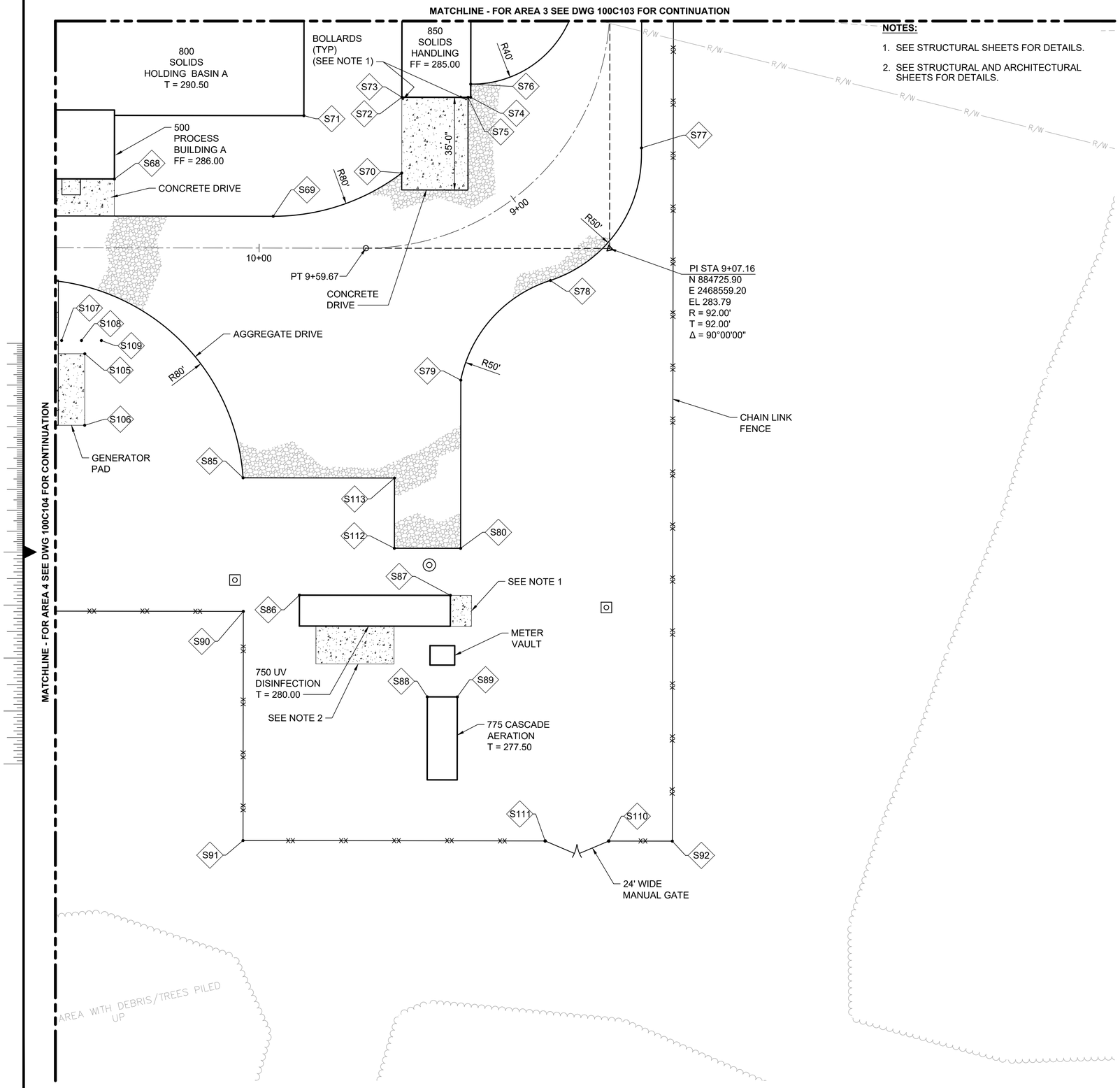

NOTES:

1. SEE STRUCTURAL SHEETS FOR DETAILS.
2. SEE STRUCTURAL AND ARCHITECTURAL SHEETS FOR DETAILS.

SITE PLAN POINT TABLE

POINT NO	NORTHING	EASTING	ELEV	DESCRIPTION
S68	884790.02	2468381.62	286.00	CORNER OF PROCESS BUILDING/CONCRETE DRIVE
S69	884763.92	2468437.42	285.20	EDGE OF AGGREGATE DRIVE
S70	884769.92	2468488.27	284.73	CORNER OF AGGREGATE DRIVE
S71	884798.72	2468456.54	286.00	CORNER OF SOLIDS HOLDING
S72	884797.91	2468494.19	285.00	CORNER OF CONCRETE DRIVE
S73	884797.91	2468494.19	287.50	CORNER OF SOLIDS HANDLING BUILDING
S74	884792.53	2468519.62	287.50	CORNER OF SOLIDS HANDLING BUILDING
S75	884792.74	2468518.65	285.00	CORNER OF CONCRETE DRIVE
S76	884797.42	2468520.66	285.21	CORNER OF AGGREGATE DRIVE
S77	884760.60	2468578.80	285.05	EDGE OF AGGREGATE DRIVE
S78	884718.70	2468534.88	283.38	EDGE OF AGGREGATE DRIVE
S79	884688.82	2468494.04	282.18	EDGE OF AGGREGATE DRIVE
S80	884626.71	2468480.90	280.29	CORNER OF AGGREGATE DRIVE
S85	884669.63	2468405.99	281.26	CORNER OF AGGREGATE DRIVE
S86	884621.92	2468417.71	280.00	CORNER OF UV DISENFECTION
S87	884610.13	2468473.48	280.00	CORNER OF UV DISENFECTION
S88	884574.42	2468457.07	277.50	CORNER OF CASCADE AERATION
S89	884572.08	2468468.16	277.50	CORNER OF CASCADE AERATION
S90	884620.27	2468395.73	279.01	CORNER OF FENCE
S91	884535.64	2468377.83	275.00	CORNER OF FENCE
S92	884502.11	2468536.41	275.00	CORNER OF FENCE
S105	884727.74	2468357.12	284.00	CORNER OF GENERATOR PAD, EP-4
S106	884701.33	2468351.54	284.00	CORNER OF GENERATOR PAD, EP-4
S107	884734.45	2468349.60	283.80	BOLLARD
S108	884732.90	2468356.94	283.82	BOLLARD
S109	884731.34	2468364.27	283.84	BOLLARD
S110	884507.08	2468512.93	275.87	GATE POST
S111	884512.04	2468489.45	276.00	GATE POST
S112	884631.88	2468456.44	280.29	CORNER OF AGGREGATE DRIVE
S113	884657.80	2468461.92	281.26	CORNER OF AGGREGATE DRIVE

NORTH

0 20' 40'
SCALE IN FEET

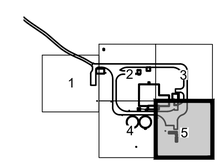

KEY MAP

GEORGIA REGISTERED No. PE051692 PROFESSIONAL ENGINEER MICHAEL CANULL

2024.06.26 15:42:05-05'00'

no.	date	by	ckd	description
0	6/26/24	MJC	JLG	ISSUED FOR CONSTRUCTION

BURNS McDONNELL
4004 SUMMIT BLVD. NE, SUITE 1200
ATLANTA, GA 30319
770-587-4776
LICENSEE NO. PEF000100
AUTHORIZATION NO. J550903

date	detailed
MARCH 13, 2023	M. ELENGEBAWY
designed	checked
M. CANULL	J. GARDER

Perry

HOUSTON COUNTY, GEORGIA

EAST PERRY WWTF
SITE PLAN
AREA 5

project 148538
contract

drawing **100C105** rev. **0**

sheet of sheets

file 148538C100_SITE PLANS.DWG

Z:\CLIENTS\WTR\PERRYGA\148538_EASTWWTP\DESIGN\CADD\CIVIL\PROD_DWGS\148538C100_SITE PLANS.DWG 6/18/2024 3:29 PM MTOOLEN

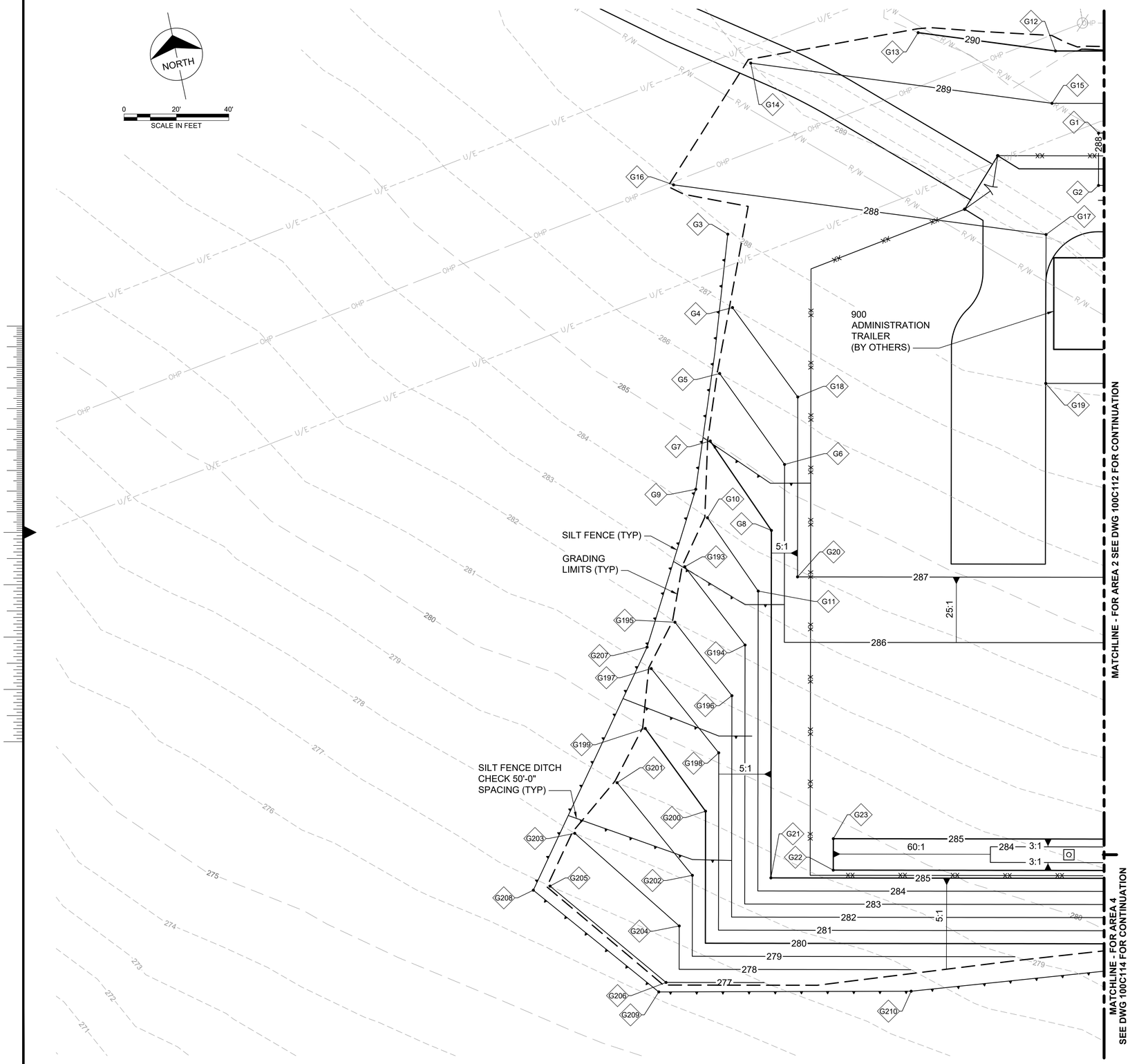

GRADING PLAN POINT TABLE				
POINT NO	NORTHING	EASTING	ELEV	DESCRIPTION
G1	885205.31	2468035.48	288.00	GRADING PI
G2	885185.74	2468031.34	288.00	GRADING PI
G3	885196.61	2467888.93	287.95	SILT FENCE
G4	885168.80	2467884.94	287.00	GRADING PI
G5	885145.18	2467874.96	286.00	GRADING PI
G6	885106.07	2467892.10	286.00	GRADING PI
G7	885120.67	2467866.16	285.00	GRADING PI
G8	885082.44	2467881.99	285.00	GRADING PI
G9	885103.75	2467856.95	284.25	SILT FENCE
G10	885092.17	2467859.08	284.00	GRADING PI
G11	885060.79	2467872.31	284.00	GRADING PI
G12	885239.39	2468025.82	290.00	GRADING PI
G13	885257.02	2467975.93	290.00	GRADING PI
G14	885258.77	2467910.97	289.00	GRADING PI
G15	885220.10	2468020.40	289.00	GRADING PI
G16	885219.32	2467872.53	288.00	GRADING PI
G17	885171.49	2468007.88	288.00	GRADING PI
G18	885130.26	2467902.32	287.00	GRADING PI
G19	885115.87	2467996.09	288.00	GRADING PI
G20	885063.02	2467888.11	287.00	GRADING PI
G21	884952.57	2467854.53	285.00	GRADING PI
G22	884950.58	2467878.45	285.00	GRADING PI
G23	884962.32	2467880.93	285.00	GRADING PI
G193	885075.66	2467846.76	283.00	GRADING PI
G194	885041.66	2467863.15	283.00	GRADING PI
G195	885055.68	2467838.75	282.00	GRADING PI
G196	885023.76	2467854.25	282.00	GRADING PI
G197	885040.21	2467826.23	281.00	GRADING PI
G198	885003.44	2467844.85	281.00	GRADING PI
G199	885018.30	2467819.30	280.00	GRADING PI
G200	884982.63	2467835.34	280.00	GRADING PI
G201	885000.23	2467804.53	279.00	GRADING PI
G202	884959.70	2467825.38	279.00	GRADING PI
G203	884984.63	2467784.72	278.00	GRADING PI
G204	884941.80	2467816.48	278.00	GRADING PI
G205	884966.83	2467771.34	277.00	GRADING PI
G206	884921.71	2467807.13	277.00	GRADING PI
G207	885048.57	2467826.36	281.30	SILT FENCE
G208	884966.61	2467764.77	276.81	SILT FENCE
G209	884918.74	2467803.66	276.12	SILT FENCE
G210	884899.19	2467898.06	277.71	SILT FENCE

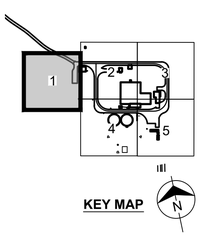

GEORGIA REGISTERED No. PE051692 PROFESSIONAL ENGINEER MICHAEL CANULL

2024.06.26 15:42:05-05'00'

no.	date	by	ckd	description
0	6/26/24	MJC	JLG	ISSUED FOR CONSTRUCTION

BURNS McDONNELL
4004 SUMMIT BLVD. NE, SUITE 1200
ATLANTA, GA 30319
770-587-4776
LICENSEE NO. PEF000100
AUTHORIZATION NO. J550903

date	detailed
MARCH 13, 2023	M. ELENGEBAWY
designed	checked
M. CANULL	J. GARDER

Perry

HOUSTON COUNTY, GEORGIA

EAST PERRY WWTF
SITE GRADING PLAN
AREA 1

project 148538 | contract

drawing **100C111** — rev. **0**

sheet of sheets

file 148538C110_GRADING PLANS.DWG

Z:\CLIENTS\WTR\PERRYGA\148538_EASTWWTP\DESIGN\CADD\CIVIL\PROD_DWGS\148538C110_GRADING PLANS.DWG 6/25/2024 2:50 PM MTOOLEN

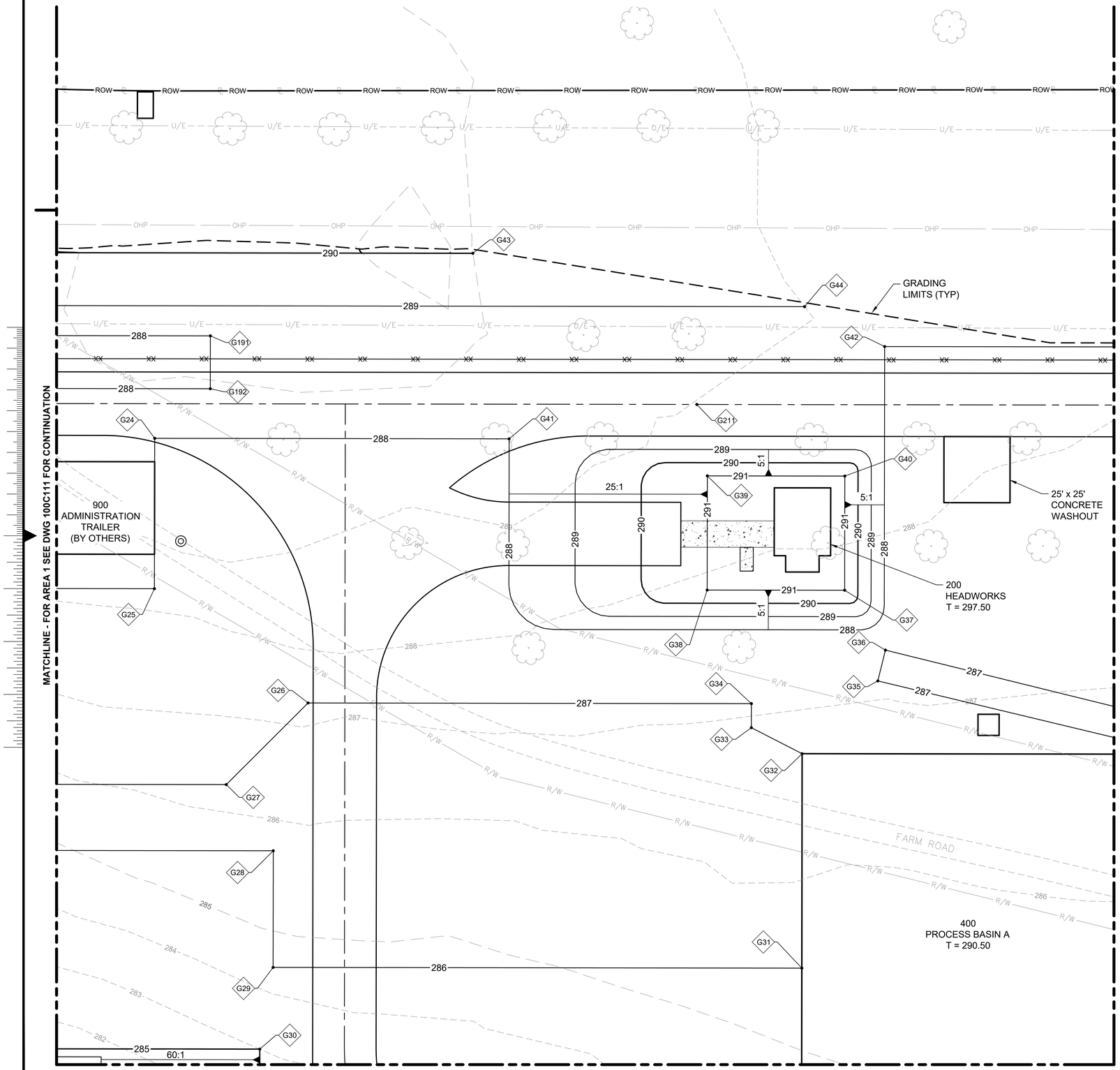

GRADING PLAN POINT TABLE				
POINT NO	NORTHING	EASTING	ELEV	DESCRIPTION
G24	885159.29	2468065.60	288.00	GRADING PI
G25	885103.67	2468053.82	288.00	GRADING PI
G26	885049.44	2468101.82	287.00	GRADING PI
G27	885025.59	2468065.19	287.00	GRADING PI
G28	884997.45	2468077.45	286.00	GRADING PI
G29	884954.29	2468068.32	286.00	GRADING PI
G30	884925.09	2468057.04	285.00	GRADING PI
G31	884912.92	2468264.00	286.00	GRADING PI
G32	884992.26	2468280.77	287.00	GRADING PI
G33	885005.83	2468263.99	287.00	GRADING PI
G34	885014.73	2468265.87	287.00	GRADING PI
G35	885013.31	2468314.44	287.00	GRADING PI
G36	885024.12	2468319.66	287.00	GRADING PI
G37	885049.45	2468309.22	291.00	GRADING PI
G38	885060.20	2468258.34	291.00	GRADING PI
G39	885102.44	2468267.27	291.00	GRADING PI
G40	885091.68	2468318.15	291.00	GRADING PI
G41	885131.56	2468196.77	288.00	GRADING PI
G42	885136.52	2468342.96	288.00	GRADING PI
G43	885203.04	2468197.76	290.00	GRADING PI
G44	885157.51	2468316.42	289.00	GRADING PI
G191	885192.90	2468094.18	288.00	GRADING PI
G192	885173.33	2468090.04	288.00	GRADING PI
G211	885129.68	2468268.94	288.50	GRADING PI

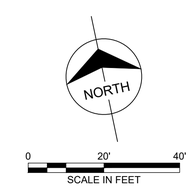

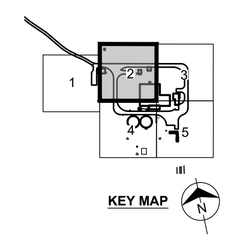

GEORGIA REGISTERED No. PE051692 PROFESSIONAL ENGINEER MICHAEL CANULL

2024.06.26 15:42:06-05'00'

no.	date	by	ckd	description
0	6/26/24	MJC	JLG	ISSUED FOR CONSTRUCTION

BURNS McDONNELL
4004 SUMMIT BLVD. NE, SUITE 1200
ATLANTA, GA 30319
770-587-4776
LICENSEE NO. PEF000100
AUTHORIZATION NO. J550903

date	detailed
MARCH 13, 2023	M. ELENGEBAWY
designed	checked
M. CANULL	J. GARDER

Perry

HOUSTON COUNTY, GEORGIA

EAST PERRY WWTF
SITE GRADING PLAN
AREA 2

project 148538 | contract

drawing **100C112** — rev. **0**

sheet of sheets

file 148538C110_GRADING PLANS.DWG

Z:\CLIENTS\WTR\PERRYGA\148538_EASTWWTP\DESIGN\CADD\CIVIL\PROD_DWGS\148538C110_GRADING PLANS.DWG 6/25/2024 2:50 PM MTOOLEN

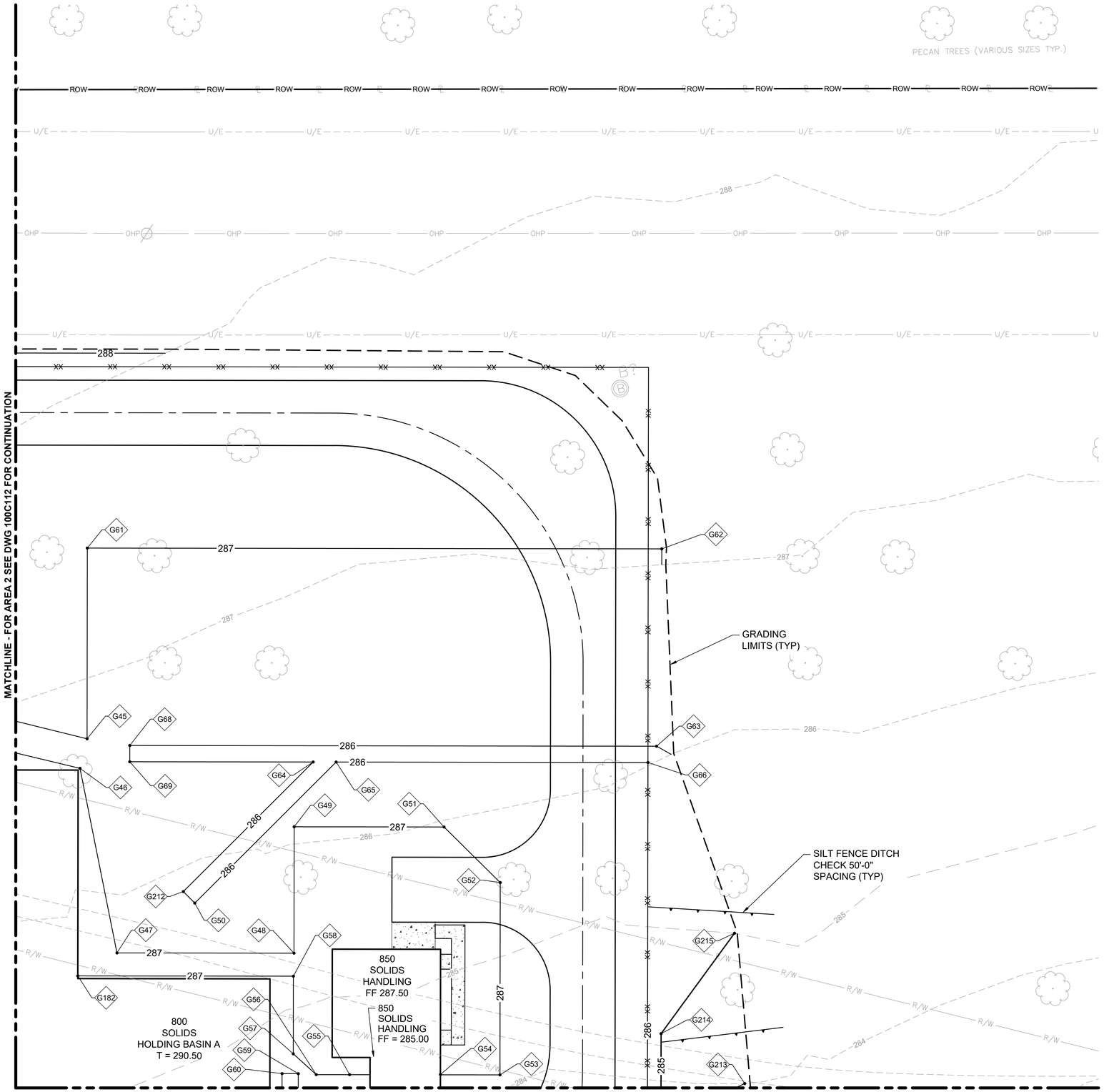

GRADING PLAN POINT TABLE

POINT NO	NORTHING	EASTING	ELEV	DESCRIPTION
G45	884973.73	2468424.35	287.00	GRADING PI
G46	884963.58	2468419.55	287.00	GRADING PI
G47	884894.06	2468418.90	287.00	GRADING PI
G48	884880.54	2468482.88	287.00	GRADING PI
G49	884926.20	2468492.54	287.00	GRADING PI
G50	884906.18	2468450.82	286.00	GRADING PI
G51	884914.75	2468546.69	287.00	GRADING PI
G52	884890.39	2468562.80	287.00	GRADING PI
G53	884820.90	2468548.11	287.00	GRADING PI
G54	884825.56	2468526.61	287.00	GRADING PI
G55	884832.40	2468493.76	287.00	GRADING PI
G56	884834.94	2468481.71	287.00	GRADING PI
G57	884844.22	2468474.99	287.00	GRADING PI
G58	884872.26	2468480.92	287.00	GRADING PI
G59	884836.65	2468475.29	286.00	GRADING PI
G60	884837.90	2468469.42	286.00	GRADING PI
G61	885042.64	2468438.92	287.00	GRADING PI
G62	884998.74	2468646.53	287.00	GRADING PI
G63	884927.80	2468629.66	286.00	GRADING PI
G64	884948.17	2468504.33	286.00	GRADING PI
G65	884946.41	2468512.63	286.00	GRADING PI
G66	884922.59	2468625.31	286.00	GRADING PI
G68	884968.06	2468439.28	286.00	SILT FENCE
G69	884962.19	2468438.04	286.54	SILT FENCE
G182	884888.74	2468403.00	287.00	GRADING PI
G212	884911.21	2468447.54	286.00	GRADING PI
G213	884799.19	2468635.94	284.00	GRADING PI
G214	884823.57	2468609.49	285.00	GRADING PI
G215	884854.30	2468643.65	285.00	GRADING PI

NORTH

0 20' 40'
SCALE IN FEET

KEY MAP

GEORGIA REGISTERED No. PE051692 PROFESSIONAL ENGINEER MICHAEL CANULL

2024.06.26 15:42:06-05'00'

no.	date	by	ckd	description
0	6/26/24	MJC	JLG	ISSUED FOR CONSTRUCTION

BURNS McDONNELL
4004 SUMMIT BLVD. NE, SUITE 1200
ATLANTA, GA 30319
770-587-4776
LICENSEE NO. PEF000100
AUTHORIZATION NO. J550903

date	detailed
MARCH 13, 2023	M. ELENGEBAWY
designed	checked
M. CANULL	J. GARDER

Perry
HOUSTON COUNTY, GEORGIA

EAST PERRY WWTF
SITE GRADING PLAN
AREA 3

project 148538 | contract

drawing **100C113** — rev. **0**

sheet of sheets

file 148538C110_GRADING PLANS.DWG

Z:\CLIENTS\WTR\PERRYGA\148538_EASTWWTP\DESIGN\CADD\CIVIL\PROD_DWGS\148538C110_GRADING PLANS.DWG 6/25/2024 2:50 PM MTOOLEN

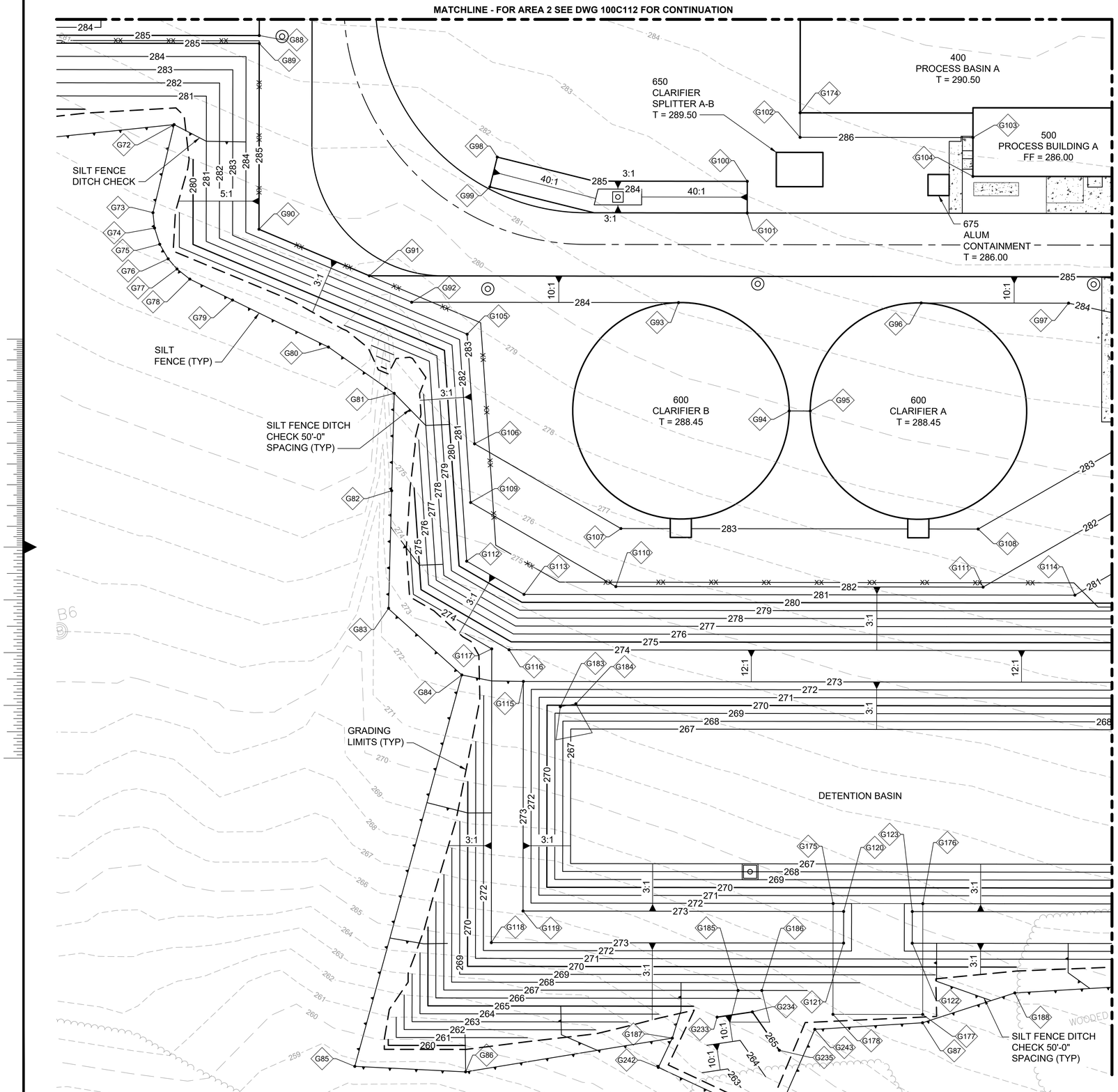

GRADING PLAN POINT TABLE

POINT NO	NORTHING	EASTING	ELEV	DESCRIPTION
G72	884886.94	2468016.04	280.44	SILT FENCE
G73	884855.92	2468001.34	278.80	SILT FENCE
G74	884850.09	2468000.73	278.54	SILT FENCE
G75	884843.68	2468001.39	278.29	SILT FENCE
G76	884837.63	2468003.37	278.08	SILT FENCE
G77	884833.14	2468005.87	277.96	SILT FENCE
G78	884828.42	2468009.82	277.86	SILT FENCE
G79	884817.33	2468024.03	277.78	SILT FENCE
G80	884792.41	2468055.95	277.66	SILT FENCE
G81	884770.12	2468076.74	276.34	SILT FENCE
G82	884734.21	2468068.21	274.45	SILT FENCE
G83	884690.84	2468057.91	272.58	SILT FENCE
G84	884660.41	2468079.88	272.28	SILT FENCE
G85	884523.56	2468009.71	258.72	SILT FENCE
G86	884512.89	2468050.38	258.87	SILT FENCE
G87	884495.53	2468223.65	267.68	SILT FENCE
G88	884913.35	2468054.56	285.00	GRADING PI
G89	884910.41	2468053.94	285.00	GRADING PI
G90	884841.51	2468039.37	285.00	GRADING PI
G91	884815.66	2468076.67	285.00	GRADING PI
G92	884802.56	2468090.31	284.00	GRADING PI
G93	884781.64	2468189.24	284.00	GRADING PI
G94	884732.84	2468221.84	284.00	GRADING PI
G95	884731.19	2468229.66	284.00	GRADING PI
G96	884762.62	2468279.21	284.00	GRADING PI
G97	884751.06	2468333.86	284.00	GRADING PI
G98	884849.74	2468133.36	285.00	GRADING PI
G99	884839.25	2468128.29	285.00	GRADING PI
G100	884821.27	2468224.18	285.00	GRADING PI
G101	884809.53	2468221.70	285.00	GRADING PI
G102	884833.48	2468247.20	286.00	GRADING PI
G103	884819.93	2468311.29	286.00	GRADING PI
G104	884805.54	2468308.24	286.00	GRADING PI
G105	884786.38	2468108.39	283.00	GRADING PI
G106	884745.15	2468102.62	283.00	GRADING PI
G107	884702.32	2468150.29	283.00	GRADING PI

SEE DWG 100C116 FOR SITE GRADING POINT TABLE CONTINUATION

NORTH

0 20' 40'
SCALE IN FEET

KEY MAP

GEORGIA REGISTERED No. PE051692 PROFESSIONAL ENGINEER MICHAEL CANULL

2024.06.26 15:42:06-05'00'

no.	date	by	ckd	description
0	6/26/24	MJC	JLG	ISSUED FOR CONSTRUCTION

BURNS McDONNELL
4004 SUMMIT BLVD. NE, SUITE 1200
ATLANTA, GA 30319
770-587-4776
LICENSEE NO. PEF000100
AUTHORIZATION NO. J550903

date	detailed
MARCH 13, 2023	M. ELENGEBAWY
designed	checked
M. CANULL	J. GARDER

Perry
HOUSTON COUNTY, GEORGIA

EAST PERRY WWTF
SITE GRADING PLAN
AREA 4

project 148538 | contract

drawing **100C114** – rev. **0**

sheet of sheets

file 148538C110_GRADING PLANS.DWG

Z:\CLIENTS\WTR\PERRYGA\148538_EASTWWTP\DESIGN\CADD\CIVIL\PROD_DWGS\148538C110_GRADING PLANS.DWG 6/25/2024 2:50 PM MTOOLEN

MATCHLINE - FOR AREA 3 SEE DWG 100C113 FOR CONTINUATION

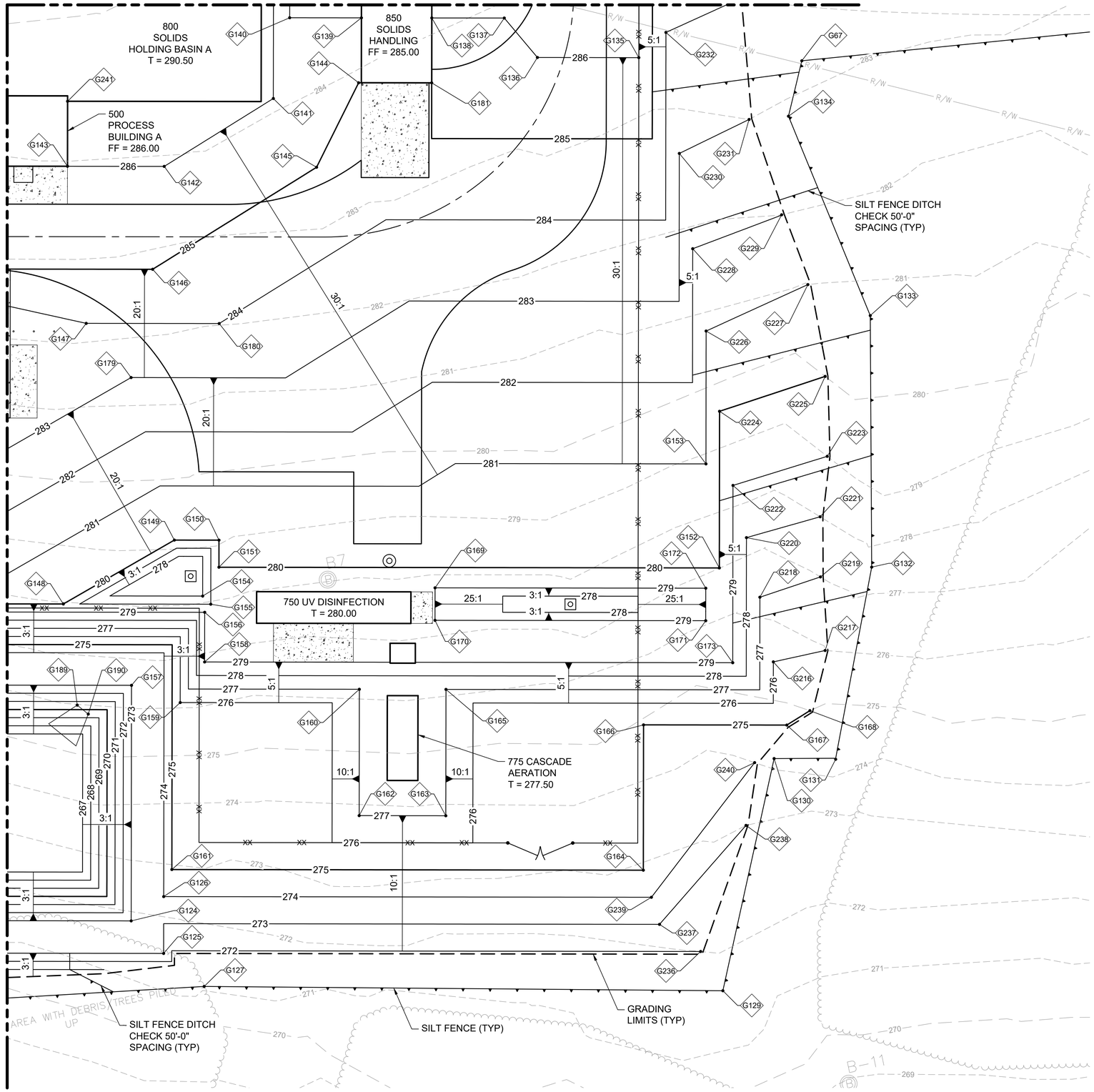

GRADING PLAN POINT TABLE				
POINT NO	NORTHING	EASTING	ELEV	DESCRIPTION
G67	884772.41	2468655.09	282.63	SILT FENCE
G124	884512.44	2468347.38	273.00	GRADING PI
G125	884498.22	2468356.63	273.00	GRADING PI
G126	884518.76	2468360.98	274.00	GRADING PI
G127	884483.21	2468368.80	271.13	SILT FENCE
G129	884442.28	2468555.99	271.66	SILT FENCE
G130	884522.31	2468592.13	274.15	SILT FENCE
G131	884517.37	2468614.33	274.34	SILT FENCE
G132	884584.09	2468641.93	277.56	SILT FENCE
G133	884675.13	2468660.51	280.68	SILT FENCE
G134	884753.39	2468646.07	282.90	SILT FENCE
G135	884785.92	2468596.42	286.00	GRADING PI
G136	884793.67	2468559.77	286.00	GRADING PI
G137	884810.44	2468550.78	286.00	GRADING PI
G138	884815.98	2468524.58	286.00	GRADING PI
G139	884821.37	2468499.13	286.00	GRADING PI
G140	884826.84	2468473.22	286.00	GRADING PI
G141	884798.89	2468461.18	286.00	GRADING PI
G142	884782.63	2468416.58	286.00	GRADING PI
G143	884790.02	2468381.62	286.00	GRADING PI
G144	884798.11	2468493.21	285.00	GRADING PI
G145	884770.76	2468471.59	285.00	GRADING PI
G146	884746.33	2468404.58	285.00	GRADING PI
G147	884731.83	2468376.47	284.00	GRADING PI
G148	884632.13	2468346.90	280.00	GRADING PI
G149	884646.80	2468391.89	280.00	GRADING PI
G150	884643.39	2468408.01	280.00	GRADING PI
G151	884633.61	2468405.95	280.00	GRADING PI
G152	884595.37	2468586.79	280.00	GRADING PI
G153	884633.99	2468589.85	281.00	GRADING PI
G154	884624.42	2468397.87	278.00	GRADING PI
G155	884620.87	2468400.19	279.00	GRADING PI
G156	884618.39	2468397.37	279.00	GRADING PI
G157	884597.56	2468365.37	273.00	GRADING PI
G158	884600.45	2468393.58	279.00	GRADING PI
G159	884587.64	2468381.67	276.00	GRADING PI

SEE DWG 100C116 FOR SITE GRADING POINT TABLE CONTINUATION

NORTH

0 20' 40'
SCALE IN FEET

KEY MAP

no.	date	by	ckd	description
0	6/26/24	MJC	JLG	ISSUED FOR CONSTRUCTION

BURNS McDONNELL
4004 SUMMIT BLVD. NE, SUITE 1200
ATLANTA, GA 30319
770-587-4776
LICENSEE NO. PEF000100
AUTHORIZATION NO. J550903

date	detailed
MARCH 13, 2023	M. ELENGEBAWY
designed	checked
M. CANULL	J. GARDER

Perry
HOUSTON COUNTY, GEORGIA

GEORGIA REGISTERED No. PE051692 PROFESSIONAL ENGINEER MICHAEL CANULL

2024.06.26 15:42:07-05'00'

EAST PERRY WWTF
SITE GRADING PLAN
AREA 5

project	contract
148538	

drawing **100C115** — rev. **0**

sheet of sheets

file 148538C110_GRADING PLANS.DWG

Z:\CLIENTS\WTR\PERRYGA\148538_EASTWWTP\DESIGN\CADD\CIVIL\PROD_DWGS\148538C110_GRADING PLANS.DWG 6/25/2024 2:50 PM MTOOLEN

SEE DWG 100C114 FOR PLAN

GRADING PLAN POINT TABLE

POINT NO	NORTHING	EASTING	ELEV	DESCRIPTION
G108	884674.32	2468282.74	283.00	GRADING PI
G109	884723.69	2468096.58	282.00	GRADING PI
G110	884681.19	2468143.88	282.00	GRADING PI
G111	884652.40	2468280.04	282.00	GRADING PI
G112	884702.22	2468090.55	281.00	GRADING PI
G113	884685.45	2468109.21	281.00	GRADING PI
G114	884642.27	2468313.47	281.00	GRADING PI
G115	884653.21	2468102.19	273.00	GRADING PI
G116	884666.07	2468099.36	274.00	GRADING PI
G117	884667.75	2468093.00	273.00	GRADING PI
G118	884558.83	2468069.97	273.00	GRADING PI
G119	884568.09	2468084.20	273.00	GRADING PI
G120	884542.96	2468203.07	273.00	GRADING PI
G121	884531.22	2468200.58	273.00	GRADING PI
G122	884525.84	2468226.02	273.00	GRADING PI
G123	884537.58	2468228.50	273.00	GRADING PI
G174	884842.57	2468249.12	286.00	GRADING PI
G175	884546.72	2468199.77	272.00	CORNER OF RIPRAP
G176	884539.69	2468233.04	272.00	CORNER OF RIPRAP
G177	884498.59	2468224.35	267.89	CORNER OF RIPRAP
G178	884505.63	2468191.09	266.81	CORNER OF RIPRAP
G183	884640.94	2468113.94	269.81	CORNER OF RIPRAP
G184	884640.84	2468119.94	270.19	CORNER OF RIPRAP
G185	884521.87	2468157.75	267.00	CORNER OF RIPRAP
G186	884520.01	2468166.56	267.00	CORNER OF RIPRAP
G187	884509.33	2468129.65	263.39	SILT FENCE
G188	884499.41	2468260.20	269.26	SILT FENCE
G233	884513.61	2468147.92	265.00	GRADING PI
G234	884512.80	2468161.41	265.00	GRADING PI
G235	884496.47	2468168.39	265.00	GRADING PI
G242	884499.55	2468122.20	261.95	SILT FENCE
G243	884501.47	2468183.18	266.12	SILT FENCE

SEE DWG 100C115 FOR PLAN

GRADING PLAN POINT TABLE

POINT NO	NORTHING	EASTING	ELEV	DESCRIPTION
G160	884578.84	2468447.44	277.00	GRADING PI
G161	884527.92	2468365.98	275.00	GRADING PI
G162	884533.18	2468437.79	277.00	GRADING PI
G163	884526.56	2468469.10	277.00	GRADING PI
G164	884491.90	2468536.38	275.00	GRADING PI
G165	884572.22	2468478.75	277.00	GRADING PI
G166	884544.40	2468547.48	275.00	GRADING PI
G167	884533.46	2468599.25	275.00	GRADING PI
G168	884536.91	2468608.70	275.00	GRADING PI
G169	884609.76	2468482.51	279.00	GRADING PI
G170	884598.01	2468480.03	279.00	GRADING PI
G171	884577.33	2468577.87	279.00	GRADING PI
G172	884589.07	2468580.35	279.00	GRADING PI
G173	884560.10	2468584.44	279.00	GRADING PI
G179	884708.84	2468388.58	283.00	GRADING PI
G180	884721.67	2468424.53	284.00	GRADING PI
G181	884792.52	2468519.62	285.00	GRADING PI
G189	884594.52	2468344.24	270.55	CORNER OF RIPRAP
G190	884590.45	2468347.56	269.45	CORNER OF RIPRAP
G216	884557.32	2468599.19	276.00	GRADING PI
G217	884557.50	2468618.78	276.00	GRADING PI
G218	884581.71	2468599.24	277.00	GRADING PI
G219	884584.45	2468622.66	277.00	GRADING PI
G220	884604.27	2468598.89	278.00	GRADING PI
G221	884606.21	2468627.12	278.00	GRADING PI
G222	884624.16	2468597.99	279.00	GRADING PI
G223	884627.52	2468634.27	279.00	GRADING PI
G224	884651.97	2468598.76	280.00	GRADING PI
G225	884656.57	2468639.60	280.00	GRADING PI
G226	884682.00	2468600.00	281.00	GRADING PI
G227	884691.06	2468640.30	281.00	GRADING PI
G228	884712.77	2468601.39	282.00	GRADING PI
G229	884718.28	2468636.12	282.00	GRADING PI
G230	884748.22	2468603.78	283.00	GRADING PI
G231	884755.20	2468631.58	283.00	GRADING PI
G232	884792.98	2468608.13	284.00	GRADING PI

SEE DWG 100C115 FOR PLAN

GRADING PLAN POINT TABLE

POINT NO	NORTHING	EASTING	ELEV	DESCRIPTION
G236	884458.16	2468550.93	272.00	GRADING PI
G237	884471.09	2468538.11	273.00	GRADING PI
G238	884500.30	2468576.90	273.00	GRADING PI
G239	884481.49	2468537.25	274.00	GRADING PI
G240	884522.32	2468584.78	274.00	GRADING PI
G241	884813.51	2468386.59	286.50	GRADING PI

no.	date	by	ckd	description
0	6/26/24	MJC	JLG	ISSUED FOR CONSTRUCTION

GEORGIA REGISTERED No. PE051692 PROFESSIONAL ENGINEER MICHAEL CANULL

2024.06.26 15:42:07-05'00'

BURNS McDONNELL
4004 SUMMIT BLVD. NE, SUITE 1200
ATLANTA, GA 30319
770-587-4776
LICENSEE NO. PEF000100
AUTHORIZATION NO. J550903

date	detailed
MARCH 13, 2023	M. ELENGEBAWY
designed	checked
M. CANULL	J. GARDER

Perry

HOUSTON COUNTY, GEORGIA

EAST PERRY WWTF
SITE GRADING
POINT TABLE SHEET

project 148538 | contract

drawing **100C116** – rev. **0**

sheet of sheets

file 148538C110_GRADING PLANS.DWG

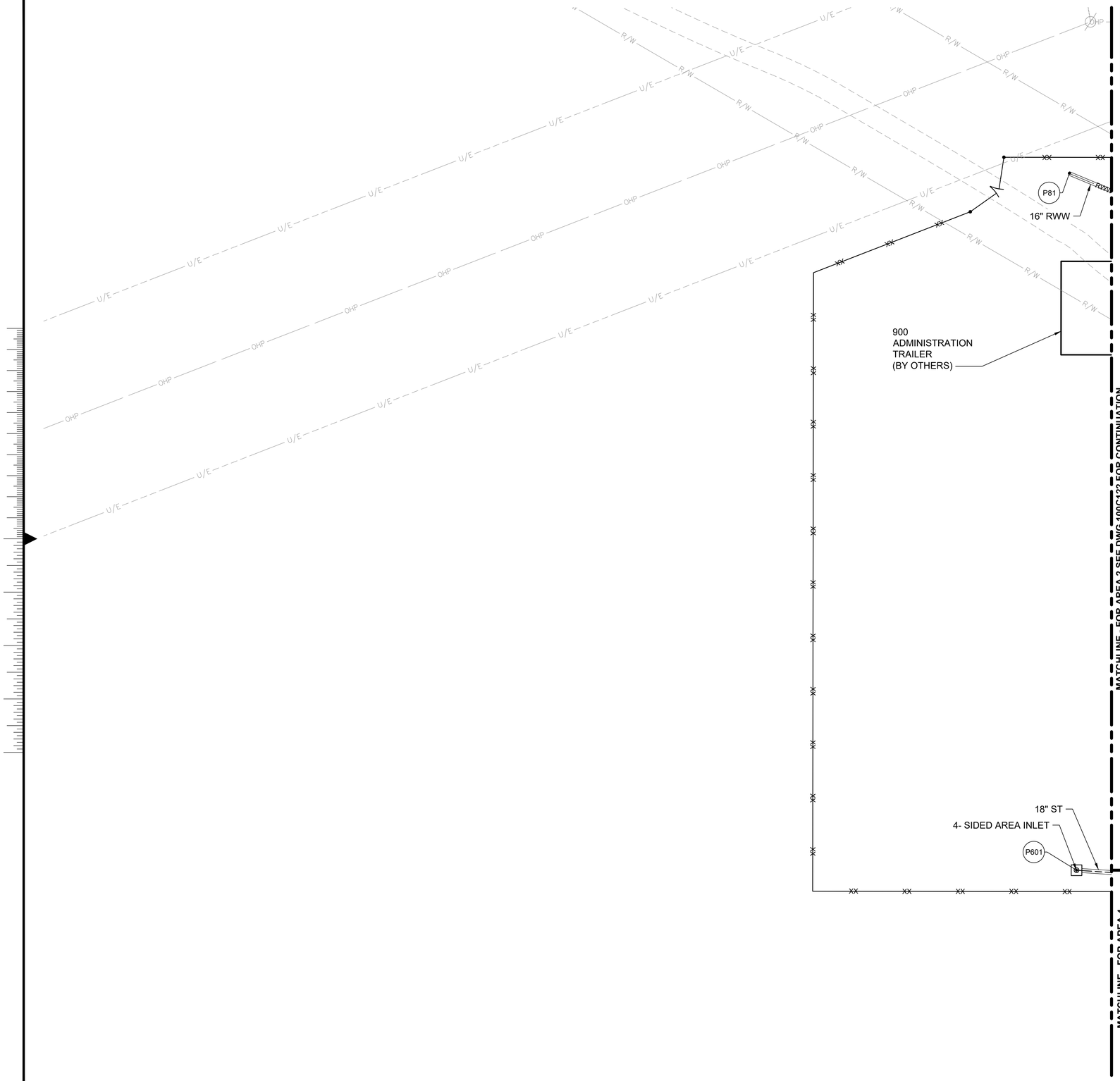

YARD PIPING SCHEDULE

POINT NO	NORTHING	EASTING	FL EL	CL EL	DESCRIPTION
P81	885193.85	2468018.78	280.33	281.00	16" RWW, COUPLING TO EX 16" RWW
P601	884937.84	2467967.75	277.66	--	60" ST AREA INLET-23, THROAT ELEV 283.67

NOTE:

1. CONTRACTOR TO CONFIRM LOCATION OF EXISITNG RWW TO PROVIDE APPROPRIATE FITTINGS AND COUPLINGS TO PERFORM CONNECTION.

NORTH

0 20' 40'
SCALE IN FEET

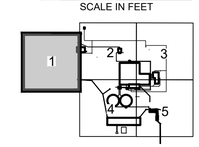

KEY MAP

N

GEORGIA REGISTERED No. PE051692 PROFESSIONAL ENGINEER MICHAEL CANULL

2024.06.26 15:42:08-05'00'

no.	date	by	ckd	description
0	6/26/24	MJC	JLG	ISSUED FOR CONSTRUCTION

BURNS McDONNELL
4004 SUMMIT BLVD. NE, SUITE 1200
ATLANTA, GA 30319
770-587-4776
LICENSEE NO. PEF000100
AUTHORIZATION NO. J550903

date	detailed
MARCH 13, 2023	M. ELENGEBAWY
designed	checked
M. CANULL	J. GARDER

Perry

HOUSTON COUNTY, GEORGIA

EAST PERRY WWTF

YARD PIPING PLAN
AREA 1

project 148538 | contract

drawing **100C121** – rev. **0**

sheet of sheets

file 148538C120_YARD PIPING.DWG

Millimeters
Scale For Microfilming
Inches

NOTES:

1. REFERENCE HOUSTON COUNTY WATER SYSTEM STANDARD DETAILS FOR CONSTRUCTION AND DESIGN, STANDARD CONSTRUCTION DETAILS, MASTER METER DETAIL W-12.
2. REFERENCE SPEC SECTION 333113 FOR PIPE TYPE FOR THE 4" RWW BETWEEN THE 900 ADMINISTRATION TRAILER AND THE LIFT STATION.

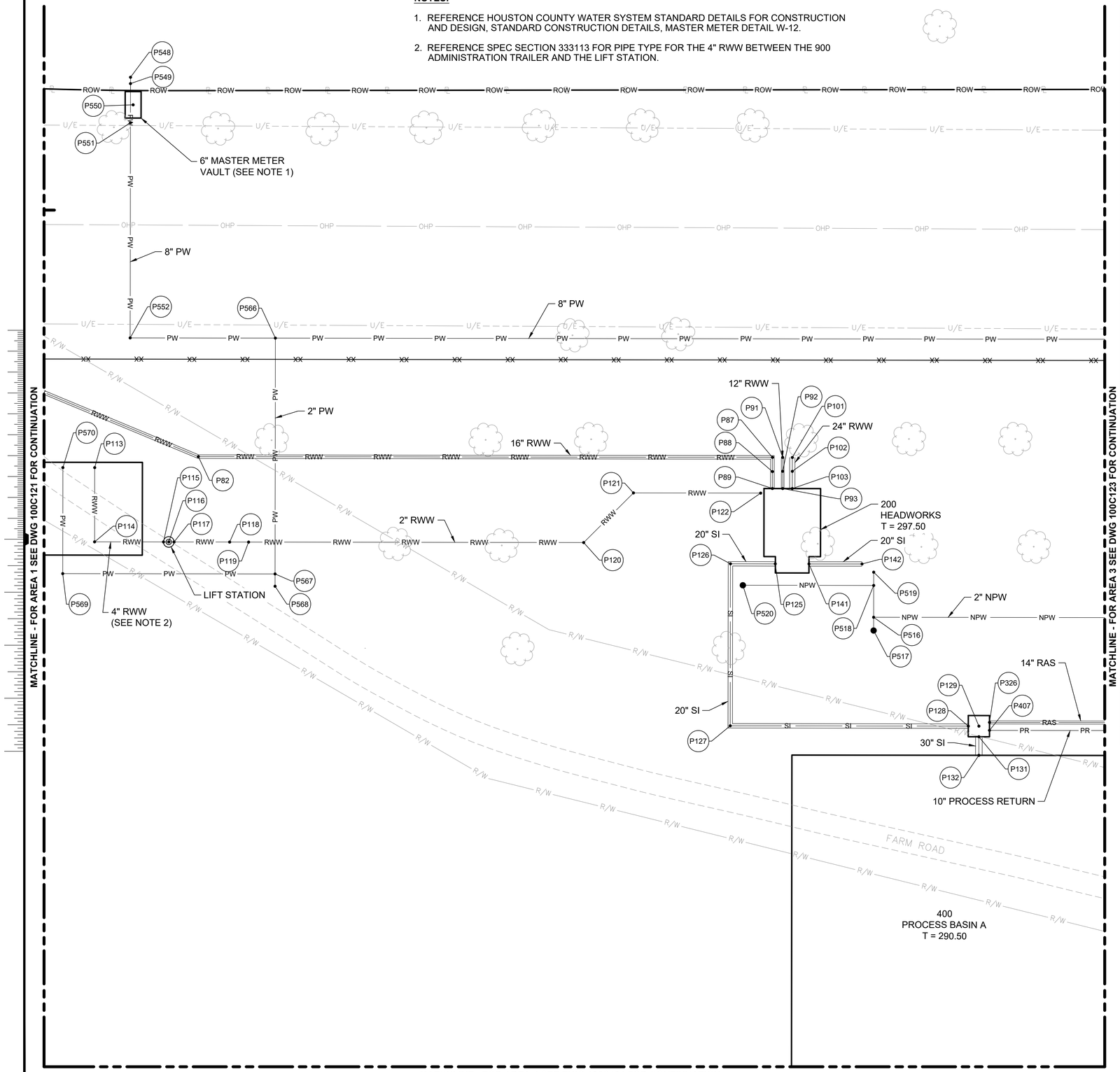

YARD PIPING SCHEDULE

POINT NO	NORTHING	EASTING	FL EL	CL EL	DESCRIPTION
P82	885148.43	2468084.85	280.33	281.00	16" RWW, 22.5° BEND
P87	885103.65	2468296.66	280.33	281.00	16" RWW, 90° BEND, ROTATED 45° UP
P88	885098.42	2468295.55	285.67	286.33	16" RWW, 45° BEND, ROTATED DOWN
P89	885092.16	2468294.23	285.67	286.33	16" RWW, SEE PROCESS FOR CONTINUATION
P91	885102.85	2468300.45	283.83	284.33	12" RWW, PLUG AND ABOVE GRADE MARKER
P92	885097.72	2468299.36	286.00	286.50	12" RWW, 22.5° BEND, ROTATED DOWN
P93	885091.36	2468298.02	286.00	286.50	12" RWW, SEE PROCESS FOR CONTINUATION
P101	885102.10	2468304.00	282.83	283.83	24" RWW, PLUG AND ABOVE GRADE MARKER
P102	885096.97	2468302.91	285.00	286.00	24" RWW, 22.5° BEND, ROTATED DOWN
P103	885090.61	2468301.57	285.00	286.00	24" RWW, SEE PROCESS FOR CONTINUATION
P113	885152.39	2468045.74	283.62	283.79	4" RWW, 90° BEND, ROTATED UP, PLUMBING CONNECTION BY OTHERS
P114	885125.00	2468039.95	283.04	283.21	4" RWW, 90° BEND
P115	885119.63	2468065.36	282.50	282.67	4" RWW, INFLUENT LIFT STATION CONNECTION
P116	885119.21	2468067.32	282.50	--	48" RWW LIFT STATION, TOP ELEV 288.50
P117	885118.80	2468069.27	284.42	284.50	2" RWW, EFFLUENT LIFT STATION CONNECTION
P118	885114.47	2468089.78	284.42	284.50	2" RWW, 22.5° BEND, ROTATED DOWN
P119	885112.98	2468096.77	281.50	281.58	2" RWW, 22.5° BEND, ROTATED UP
P120	885086.85	2468220.39	281.50	281.58	2" RWW, 45° BEND
P121	885101.31	2468242.61	283.29	283.37	2" RWW, 45° BEND
P122	885091.39	2468289.54	286.80	286.88	2" RWW, 90° BEND, ROTATED UP, SEE PROCESS FOR CONTINUATION
P125	885064.12	2468289.49	281.67	282.50	20" SI, SEE PROCESS FOR CONTINUATION
P126	885067.62	2468272.91	281.75	282.58	20" SI, 90° BEND
P127	885007.84	2468260.27	282.04	282.87	20" SI, 90° BEND
P128	884989.27	2468348.11	282.46	283.30	20" SI, WALL
P129	884988.44	2468352.03	282.46	--	96x96" FLOW COMBINATION MANHOLE, TOP ELEV 293.00
P131	884984.53	2468351.20	282.46	283.71	30" SI, WALL
P132	884977.68	2468349.75	282.50	283.75	30" SI, WALL
P141	885061.50	2468301.89	281.67	282.50	20" SI, SEE PROCESS FOR CONTINUATION
P142	885057.36	2468321.45	281.67	282.50	20" SI, PLUG AND ABOVE GRADE MARKER
P326	884989.00	2468356.23	283.25	283.83	14" RAS, WALL
P407	884986.06	2468355.61	283.58	284.00	10" PR, WALL
P516	885036.79	2468321.62	283.59	283.67	2x2x2" NPW, TEE
P517	885031.90	2468320.58	283.59	283.67	2" NPW, YARD HYDRANT
P518	885048.54	2468324.10	283.75	283.83	2x2x2" NPW, TEE
P519	885053.43	2468325.13	283.75	283.83	2" NPW, PLUG AND ABOVE GRADE MARKER
P520	885058.74	2468275.84	286.76	286.84	2" NPW, YARD HYDRANT

SEE DWG 100C126 FOR YARD PIPING SCHEDULE CONTINUATION

no.	date	by	ckd	description
0	6/26/24	MJC	JLG	ISSUED FOR CONSTRUCTION

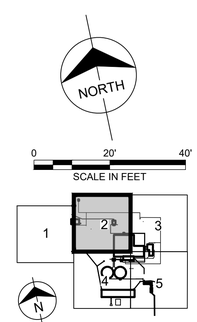

KEY MAP

GEORGIA REGISTERED No. PE051692 PROFESSIONAL ENGINEER MICHAEL CANULL

2024.06.26 15:42:08-05'00'

BURNS McDONNELL
4004 SUMMIT BLVD. NE, SUITE 1200
ATLANTA, GA 30319
770-587-4776
LICENSEE NO. PEF000100
AUTHORIZATION NO. J550903

date	detailed
MARCH 13, 2023	M. ELENGEBAWY
designed	checked
M. CANULL	J. GARDER

Perry

HOUSTON COUNTY, GEORGIA

EAST PERRY WWTF

YARD PIPING PLAN
AREA 2

project 148538 | contract

drawing **100C122** – rev. **0**

sheet of sheets

file 148538C120_YARD PIPING.DWG

Z:\CLIENTS\WTR\PERRYGA\148538_EASTWWTP\DESIGN\CADD\CIVIL\PROD_DWGS\148538C120_YARD PIPING.DWG 6/26/2024 2:34 PM MTOOLEN

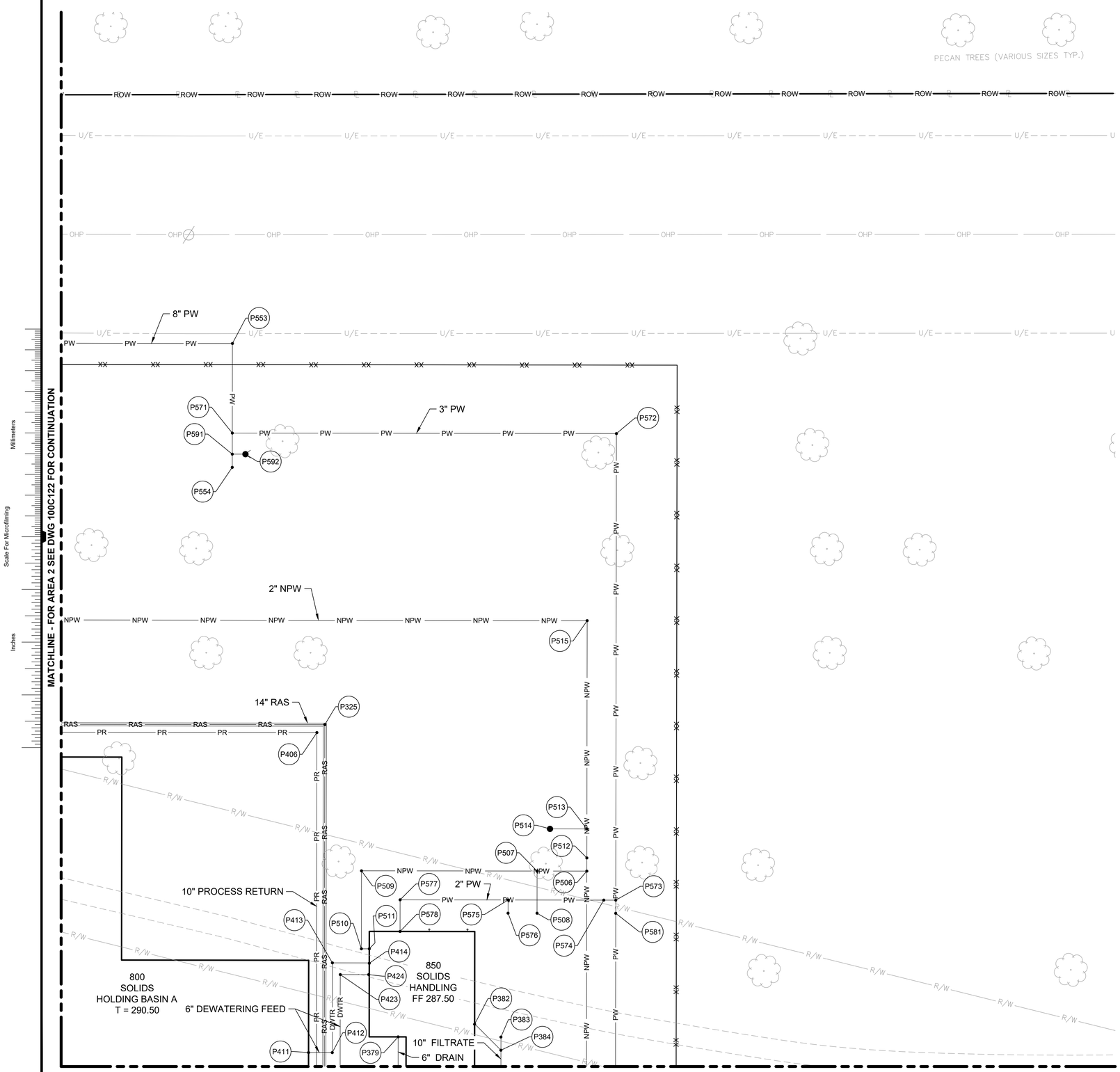

YARD PIPING SCHEDULE

POINT NO	NORTHING	EASTING	FL EL	CL EL	DESCRIPTION
P325	884959.31	2468496.63	281.00	281.58	14" RAS, 90° BEND
P379	884837.67	2468499.53	282.92	283.17	6" DRAIN, SEE PLUMBING FOR CONTINUATION
P382	884836.40	2468528.90	282.58	283.00	10" FILTRATE, SEE PROCESS FOR CONTINUATION
P383	884829.60	2468537.68	281.47	281.89	10" FILTRATE, WYE AND 6" SSFM CLEANOUT
P384	884824.71	2468536.65	281.41	281.82	10x10" FILTRATE, WYE
P406	884957.00	2468493.07	281.00	281.42	10" PR, 90° BEND
P411	884838.83	2468465.02	280.52	280.77	6" DWTR, WALL
P412	884836.97	2468473.83	280.52	280.77	6" DWTR, 90° BEND
P413	884870.28	2468480.87	281.54	281.79	6" DWTR, 90° BEND
P414	884867.43	2468494.36	281.54	281.79	6" DWTR, SEE PROCESS FOR CONTINUATION
P423	884865.32	2468482.89	281.54	281.79	6" DWTR, 90° BEND
P424	884863.09	2468493.44	281.54	281.79	6" DWTR, SEE PROCESS FOR CONTINUATION
P506	884884.51	2468582.51	280.08	280.16	2" NPW, TAP
P507	884888.41	2468564.05	280.08	280.16	2x2x2" NPW, TEE
P508	884872.76	2468560.74	280.08	280.16	2" NPW, PLUG AND ABOVE GRADE MARKER
P509	884902.19	2468498.86	281.98	282.07	2" NPW, 90° BEND
P510	884873.24	2468492.74	282.32	282.40	2" NPW, 90° BEND
P511	884872.63	2468495.68	282.42	282.50	2" NPW, WALL
P512	884889.40	2468583.55	280.35	280.43	2x6" NPW, REDUCER
P513	884900.17	2468585.82	280.38	280.46	2x2x2" NPW, TEE
P514	884903.06	2468572.12	280.38	280.46	2" NPW, YARD HYDRANT
P515	884977.47	2468602.17	282.00	282.08	2" NPW, 90° BEND
P553	885108.06	2468492.04	283.25	283.58	8" PW, 90° BEND
P554	885062.09	2468482.32	282.92	283.25	8" PW, PLUG AND ABOVE GRADE MARKER
P571	885074.81	2468485.01	283.01	283.14	3" PW, TAP
P572	885044.65	2468627.61	283.01	283.14	3" PW, 90° BEND
P573	884871.48	2468591.00	281.08	281.17	3x3x2" PW, TEE
P574	884872.42	2468586.55	282.01	282.10	2" PW, 22.5° BEND, ROTATED UP
P575	884879.93	2468551.02	282.01	282.10	2x2x2" PW, TEE
P576	884875.04	2468549.98	282.01	282.10	2" PW, PLUG AND ABOVE GRADE MARKER
P577	884888.40	2468510.94	282.01	282.09	2" PW, 90° BEND
P578	884876.66	2468508.45	282.01	282.09	2" PW, WALL
P581	884866.58	2468589.96	281.03	281.11	3x2" PW, REDUCER
P591	885066.98	2468483.36	282.96	283.21	8x8x6" PW, TEE
P592	885065.94	2468488.25	282.96	283.21	6" PW, FIRE HYDRANT

no.	date	by	ckd	description
0	6/26/24	MJC	JLG	ISSUED FOR CONSTRUCTION

NORTH

0 20' 40'
SCALE IN FEET

KEY MAP

GEORGIA REGISTERED No. PE051692 PROFESSIONAL ENGINEER MICHAEL CANULL

2024.06.26 15:42:08-05'00'

BURNS McDONNELL
4004 SUMMIT BLVD. NE, SUITE 1200
ATLANTA, GA 30319
770-587-4776
LICENSEE NO. PEF000100
AUTHORIZATION NO. J550903

date	detailed
MARCH 13, 2023	M. ELENGEBAWY
designed	checked
M. CANULL	J. GARDER

Perry
HOUSTON COUNTY, GEORGIA

EAST PERRY WWTF

YARD PIPING PLAN
AREA 3

project 148538 | contract

drawing **100C123** — rev. **0**

sheet of sheets

file 148538C120_YARD PIPING.DWG

Z:\CLIENTS\WTR\PERRYGA\148538_EASTWWTP\DESIGN\CADD\CIVIL\PROD_DWGS\148538C120_YARD PIPING.DWG 6/26/2024 2:34 PM MTOOLEN

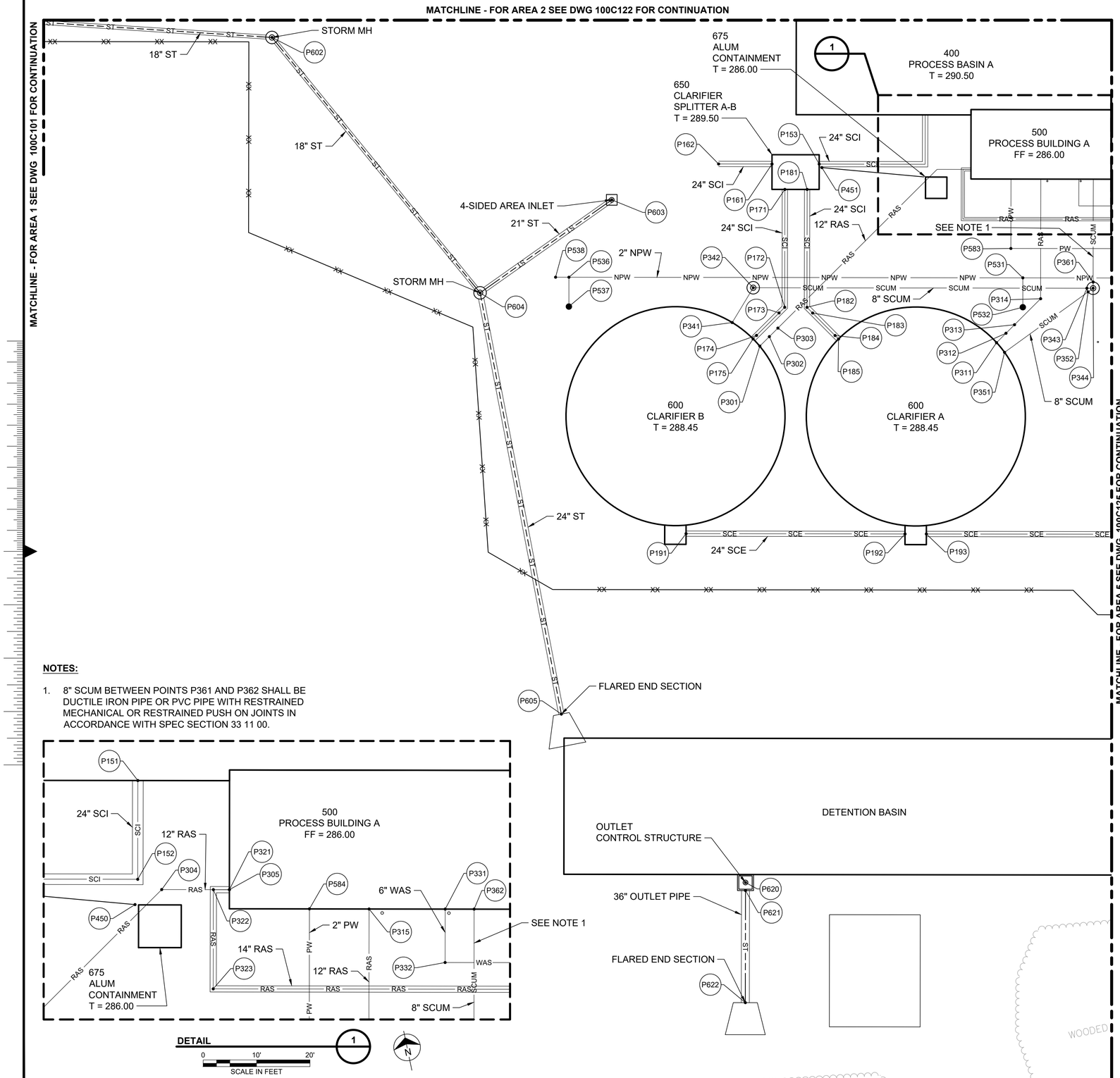

NOTES:

1. 8" SCUM BETWEEN POINTS P361 AND P362 SHALL BE DUCTILE IRON PIPE OR PVC PIPE WITH RESTRAINED MECHANICAL OR RESTRAINED PUSH ON JOINTS IN ACCORDANCE WITH SPEC SECTION 33 11 00.

DETAIL 1

0 10' 20'
SCALE IN FEET

SEE DWG 100C126 FOR YARD PIPING SCHEDULE

YARD PIPING SCHEDULE

POINT NO	NORTHING	EASTING	FL EL	CL EL	DESCRIPTION
P153	884822.68	2468253.78	279.25	280.25	24" SCI, WALL
P161	884826.33	2468236.49	279.25	280.25	24" SCI, WALL
P162	884830.47	2468216.93	279.42	280.42	24" SCI, PLUG AND ABOVE GRADE MARKER
P171	884816.04	2468239.26	279.25	280.25	24" SCI, WALL
P172	884772.83	2468230.12	279.25	280.25	24" SCI, 45° BEND
P173	884771.19	2468227.61	279.25	280.25	24" SCI, 45° BEND, ROTATED DOWN
P174	884764.70	2468217.63	267.35	268.35	24" SCI, 45° BEND, ROTATED UP
P175	884763.69	2468216.08	267.35	268.35	24" SCI, SEE PROCESS FOR CONTINUATION
P181	884814.31	2468247.41	279.25	280.25	24" SCI, WALL
P182	884771.10	2468238.27	279.25	280.25	24" SCI, 45° BEND
P183	884768.59	2468239.91	279.25	280.25	24" SCI, 45° BEND, ROTATED DOWN
P184	884758.62	2468246.40	267.35	268.35	24" SCI, 45° BEND, ROTATED UP
P185	884757.07	2468247.41	267.35	268.35	24" SCI, SEE PROCESS FOR CONTINUATION
P191	884697.45	2468176.53	274.50	275.50	24" SCE, WALL
P192	884680.48	2468256.76	274.50	275.50	24" SCE, WALL
P193	884678.83	2468264.59	274.50	275.50	24" SCE, WALL
P301	884760.52	2468218.01	268.35	268.85	12" RAS, SEE PROCESS FOR CONTINUATION
P302	884763.27	2468222.23	268.35	268.85	12" RAS, 45° BEND, ROTATED UP
P303	884765.74	2468226.03	272.88	273.38	12" RAS, 45° BEND, ROTATED DOWN
P311	884743.56	2468305.03	268.35	268.85	12" RAS, SEE PROCESS FOR CONTINUATION
P312	884746.29	2468309.22	268.35	268.85	12" RAS, 45° BEND, ROTATED UP
P313	884748.76	2468313.02	272.88	273.38	12" RAS, 45° BEND, ROTATED DOWN
P314	884756.28	2468324.57	272.88	273.38	12" RAS, 45° BEND
P341	884771.29	2468209.71	277.33	277.66	8" SCUM, WALL
P342	884782.41	2468220.09	277.02	--	48" SCUM MH-12, TOP ELEV 284.32
P343	884756.56	2468342.35	274.50	274.83	8" SCUM, A-LOK
P344	884756.08	2468344.63	272.04	--	48" SCUM MH-11, TOP ELEV 284.34
P351	884739.40	2468307.22	277.33	277.66	8" SCUM, WALL
P352	884755.13	2468342.50	275.98	276.31	8" SCUM, A-LOK
P361	884758.36	2468345.11	272.00	272.33	8" SCUM, A-LOK
P451	884821.19	2468254.48	283.53	283.70	4" ALUM, 90° BEND, ROTATED UP, SEE PROCESS FOR CONTINUATION
P531	884765.30	2468319.67	278.10	278.18	2x2x2" NPW, TEE
P532	884754.54	2468317.39	278.10	278.18	2" NPW, YARD HYDRANT
P536	884800.47	2468153.34	278.10	278.18	2x2x2" NPW, TEE
P537	884789.71	2468151.07	278.10	278.18	2" NPW, YARD HYDRANT
P538	884801.51	2468148.45	278.10	278.18	2" NPW, PLUG AND ABOVE GRADE MARKER
P583	884777.00	2468317.54	281.63	281.71	2" PW, 90° BEND
P602	884911.21	2468062.97	275.68	--	60" ST MH-22, TOP ELEV 285.50
P603	884825.53	2468175.00	274.42	--	60" ST AREA INLET-26, THROAT ELEV 283.67
P604	884801.57	2468119.58	273.21	--	60" ST MH-21, TOP ELEV 284.42
P605	884640.89	2468116.94	270.00	271.00	24" ST, FLARED END SECTION
P620	884564.97	2468171.47	265.40	--	60x60" OUTLET CONTROL STRUCTURE-41, WEIR ELEV 271.00, ORIFICE ELEV 267.50
P621	884562.03	2468170.84	267.40	268.90	36" ST, OUTLET PIPE CONNECTION
P622	884520.94	2468162.16	267.00	268.50	36" ST, FLARED END SECTION

NORTH

0 20' 40'
SCALE IN FEET

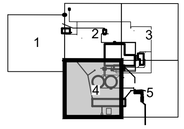

KEY MAP

GEORGIA REGISTERED No. PE051692 PROFESSIONAL ENGINEER MICHAEL CANULL

2024.06.26 15:42:09-05'00'

no.	date	by	ckd	description
0	6/26/24	MJC	JLG	ISSUED FOR CONSTRUCTION

BURNS McDONNELL
4004 SUMMIT BLVD. NE, SUITE 1200
ATLANTA, GA 30319
770-587-4776
LICENSEE NO. PEF000100
AUTHORIZATION NO. J550903

date	detailed
MARCH 13, 2023	M. ELENGEBAWY
designed	checked
M. CANULL	J. GARDER

Perry
HOUSTON COUNTY, GEORGIA

EAST PERRY WWTF

YARD PIPING PLAN
AREA 4

project 148538 | contract

drawing **100C124** — rev. **0**

sheet of sheets

file 148538C120_YARD PIPING.DWG

Z:\CLIENTS\WTR\PERRYGA\148538_EASTWWTP\DESIGN\CADD\CIVIL\PROD_DWGS\148538C120_YARD PIPING.DWG 6/26/2024 2:34 PM MTOOLEN

MATCHLINE - FOR AREA 3 SEE DWG 100C123 FOR CONTINUATION

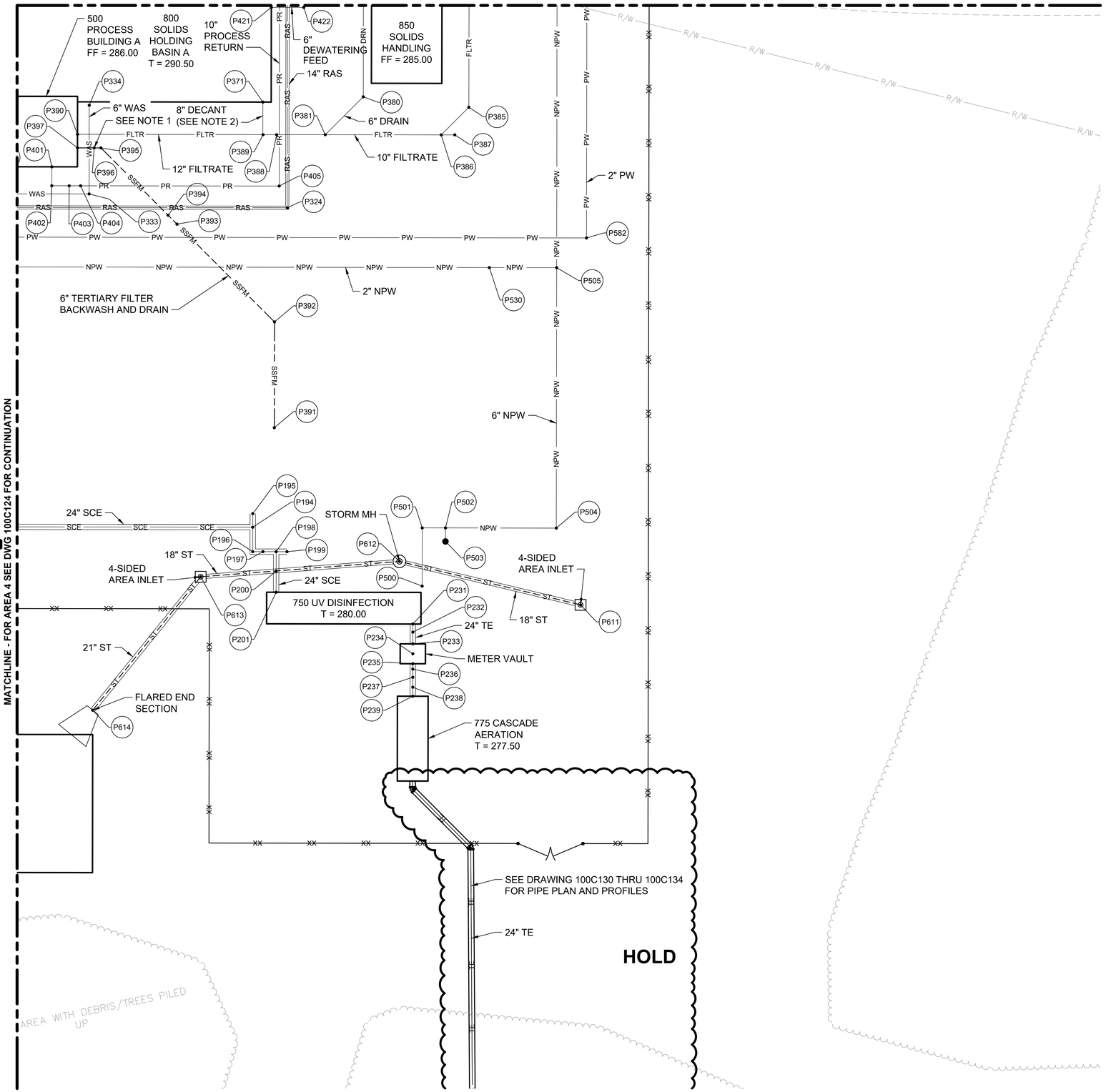

YARD PIPING SCHEDULE

POINT NO	NORTHING	EASTING	FL EL	CL EL	DESCRIPTION
P194	884646.47	2468417.62	274.50	275.50	24x24x24" SCE, TEE
P195	884651.36	2468418.66	274.50	275.50	24" SCE, PLUG AND ABOVE GRADE MARKER
P196	884637.64	2468415.75	274.50	275.50	24" SCE, 90° BEND, ROTATED 11.25° UP
P197	884636.86	2468419.44	275.25	276.25	24" SCE, 11.25° BEND, ROTATED DOWN
P198	884635.85	2468424.23	275.25	276.25	24x24x24" SCE, TEE, BRANCH ROTATED 45° DOWN
P199	884635.02	2468428.15	275.25	276.25	24" SCE, PLUG AND ABOVE GRADE MARKER
P200	884628.81	2468422.74	268.33	269.33	24" SCE, 45° BEND, ROTATED UP
P201	884621.20	2468421.14	268.33	269.33	24" SCE, WALL
P231	884599.34	2468468.13	268.33	269.33	24" TE, WALL
P232	884596.40	2468467.51	268.33	269.33	24x16" TE, ECCENTRIC REDUCER
P233	884592.16	2468466.61	269.00	269.66	16" TE, WALL
P234	884588.58	2468465.85	269.00	--	88x112" TE METER VAULT, TOP ELEV 280.00
P235	884584.99	2468465.10	269.00	269.66	16" TE, WALL
P236	884583.03	2468464.68	269.00	269.66	24x16" TE, ECCENTRIC REDUCER
P237	884580.10	2468464.06	268.33	269.33	24" TE, 45° BEND, ROTATED UP
P238	884576.51	2468463.30	272.00	273.00	24" TE, 45° BEND, ROTATED DOWN
P239	884573.25	2468462.61	272.00	273.00	24" TE, WALL
P324	884759.32	2468454.34	276.17	276.75	14" RAS, 90° BEND
P333	884779.34	2468383.79	278.25	278.50	6" WAS, 90° BEND
P334	884811.39	2468390.57	278.25	278.50	6" WAS, 90° BEND, ROTATED UP, SEE PROCESS FOR CONTINUATION
P371	884799.35	2468453.53	281.35	281.68	8" DECANT, WALL
P380	884793.64	2468490.22	280.99	281.24	6" DRAIN, 45° BEND
P381	884782.84	2468473.60	280.14	280.39	6x10" DRAIN, WYE
P385	884781.84	2468527.59	280.86	281.28	10" FILTRATE, 45° BEND
P386	884773.98	2468515.51	280.68	281.10	10x10" FILTRATE, WYE
P387	884772.95	2468520.40	280.68	281.10	10" FILTRATE, WYE AND 6" SSFM CLEANOUT
P388	884786.55	2468456.06	279.92	280.34	10x12" FILTRATE, REDUCER
P389	884787.59	2468451.17	279.86	280.36	8x12x12" FILTRATE, TEE
P390	884801.77	2468384.10	279.00	279.50	12" FILTRATE, WALL
P391	884680.79	2468432.97	276.43	276.68	6" BACKWASH, PLUG AND ABOVE GRADE MARKER
P392	884719.03	2468441.05	276.43	276.68	6" BACKWASH, 45° BEND
P393	884761.76	2468413.23	276.43	276.68	6" BACKWASH, 45° BEND, ROTATED UP
P394	884765.65	2468410.71	281.06	281.31	6" BACKWASH, 45° BEND, ROTATED DOWN
P395	884795.08	2468391.55	281.06	281.31	6" BACKWASH, 45° BEND
P396	884795.60	2468389.10	281.51	281.76	6" BACKWASH, PLUG VALVE
P421	884832.96	2468463.78	280.52	280.77	6" DWTR, WALL
P422	884830.48	2468475.52	280.52	280.77	6" DWTR, 90° BEND

SEE DWG 100C126 FOR YARD PIPING SCHEDULE CONTINUATION

NOTES:

1. 6" PLUG VALVE SHALL REMAIN CLOSED UNTIL COMPLETION OF THE CONSTRUCTION OF FUTURE TERTIARY TREATMENT.
2. PROVIDE MINIMUM 3.00% SLOPE FOR 8" DECANT PIPE FROM P371 TO P389.

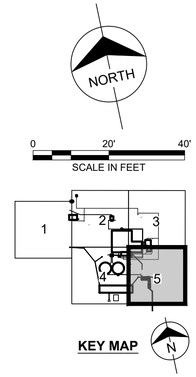

GEORGIA REGISTERED No. PE051692 PROFESSIONAL ENGINEER MICHAEL CANULL

2024.06.26 15:42:09-05'00'

no.	date	by	ckd	description
0	6/26/24	MJC	JLG	ISSUED FOR CONSTRUCTION

BURNS McDONNELL
4004 SUMMIT BLVD. NE, SUITE 1200
ATLANTA, GA 30319
770-587-4776
LICENSEE NO. PEF000100
AUTHORIZATION NO. J550903

date	detailed
MARCH 13, 2023	M. ELENGEBAWY
designed	checked
M. CANULL	J. GARDER

Perry
HOUSTON COUNTY, GEORGIA

EAST PERRY WWTF

YARD PIPING PLAN
AREA 5

project 148538 | contract

drawing **100C125** — rev. **0**

sheet of sheets

file 148538C120_YARD PIPING.DWG

Z:\CLIENTS\WTR\PERRYGA\148538_EASTWWTP\DESIGN\CADD\CIVIL\PROD_DWGS\148538C120_YARD PIPING.DWG 6/26/2024 2:34 PM MTOOLEN

SEE DWG 100C122 FOR PLAN

YARD PIPING SCHEDULE

POINT NO	NORTHING	EASTING	FL EL	CL EL	DESCRIPTION
P548	885293.73	2468089.22	285.78	286.11	8" PW, COUPLING TO EX 8" PW
P549	885291.38	2468088.72	285.78	286.11	8" PW, GATE VALVE
P550	885283.35	2468088.05	--	--	72x120" PW MASTER METER VAULT, TOP ELEV 290.53
P551	885276.95	2468085.67	285.78	286.11	8" PW, GATE VALVE
P552	885197.53	2468068.88	290.53	285.78	8" PW, 90° BEND
P566	885186.20	2468122.47	283.25	283.33	2" PW, TAP
P567	885099.18	2468104.07	283.25	283.33	2x2x2" PW, TEE
P568	885094.63	2468103.11	283.25	283.33	2" PW, PLUG AND ABOVE GRADE MARKER
P569	885115.74	2468025.73	283.25	283.33	2" PW, 90° BEND
P570	885154.87	2468034.00	283.25	283.33	2" PW, 90° BEND, ROTATED UP, SEE PLUMBING FOR CONTINUATION

SEE DWG 100C124 FOR PLAN

YARD PIPING SCHEDULE

POINT NO	NORTHING	EASTING	FL EL	CL EL	DESCRIPTION
P151	884832.57	2468296.41	279.75	280.75	24" SCI, WALL
P152	884814.47	2468292.59	279.59	280.59	24" SCI, 90° BEND
P304	884811.67	2468296.58	272.88	273.38	12" RAS, 45° BEND
P305	884809.04	2468308.98	272.88	273.38	12" RAS, WALL
P315	884800.13	2468333.84	272.88	273.38	12" RAS, WALL
P321	884809.04	2468308.98	278.92	279.50	14" RAS, WALL
P322	884809.67	2468306.05	278.92	279.50	14" RAS, 90° BEND
P323	884791.48	2468302.21	278.92	279.50	14" RAS, 90° BEND
P331	884797.18	2468347.79	278.25	278.50	6" WAS, WALL
P332	884787.39	2468345.72	278.25	278.50	6" WAS, 90° BEND
P362	884796.06	2468353.09	272.00	272.33	8" SCUM, WALL
P450	884809.94	2468291.12	283.50	283.67	4" ALUM, 90° BEND, ROTATED UP, SEE PROCESS FOR CONTINUATION
P584	884802.44	2468322.92	281.63	281.71	2" PW, WALL, SEE PLUMBING FOR CONTINUATION

SEE DWG 100C125 FOR PLAN

YARD PIPING SCHEDULE

POINT NO	NORTHING	EASTING	FL EL	CL EL	DESCRIPTION
P397	884796.87	2468383.07	282.61	282.86	6" BACKWASH, WALL
P401	884791.98	2468372.37	279.58	280.00	10" PR, WALL
P402	884785.13	2468370.92	279.58	280.00	10" PR, 90° BEND
P403	884783.81	2468377.19	279.58	280.00	10" PR, 22.5° BEND, ROTATED DOWN
P404	884782.93	2468381.31	276.17	276.59	10" PR, 22.5° BEND, ROTATED UP
P405	884767.77	2468453.06	276.17	276.59	10" PR, 90° BEND
P500	884612.33	2468474.36	275.37	275.62	6" NPW, SEE PROCESS FOR CONTINUATION
P501	884633.37	2468478.81	275.37	275.62	6" NPW, 90° BEND
P502	884631.59	2468487.21	275.37	275.45	2" NPW, TAP
P503	884626.70	2468486.18	275.37	275.45	2" NPW, YARD HYDRANT
P504	884623.12	2468527.25	275.37	275.62	6" NPW, 90° BEND
P505	884717.21	2468547.14	277.17	277.26	2" NPW, TAP
P530	884722.35	2468522.82	278.10	278.18	2" NPW, 11.25° BEND, ROTATED DOWN
P582	884725.70	2468560.18	279.42	279.50	2" PW, 90° BEND
P611	884593.54	2468530.19	273.60	--	60" ST AREA INLET-33, THROAT ELEV 277.67
P612	884622.97	2468468.04	272.40	--	60" ST MH-32, TOP ELEV 280.02
P613	884632.51	2468395.05	271.11	--	60" ST AREA INLET-31, THROAT ELEV 277.67
P614	884592.48	2468345.90	270.00	270.88	21" ST, FLARED END SECTION

GEORGIA REGISTERED No. PE051692 PROFESSIONAL ENGINEER MICHAEL CANULL

2024.06.26 15:42:09-05'00'

no.	date	by	ckd	description
0	6/26/24	MJC	JLG	ISSUED FOR CONSTRUCTION

BURNS McDONNELL
4004 SUMMIT BLVD. NE, SUITE 1200
ATLANTA, GA 30319
770-587-4776
LICENSEE NO. PEF000100
AUTHORIZATION NO. J550903

date	detailed
MARCH 13, 2023	M. ELENGEBAWY
designed	checked
M. CANULL	J. GARDER

Perry

HOUSTON COUNTY, GEORGIA

EAST PERRY WWTF

YARD PIPING POINT TABLE SHEET

project 148538 | contract

drawing **100C126** – rev. **0**

sheet of sheets

file 148538C120_YARD PIPING.DWG

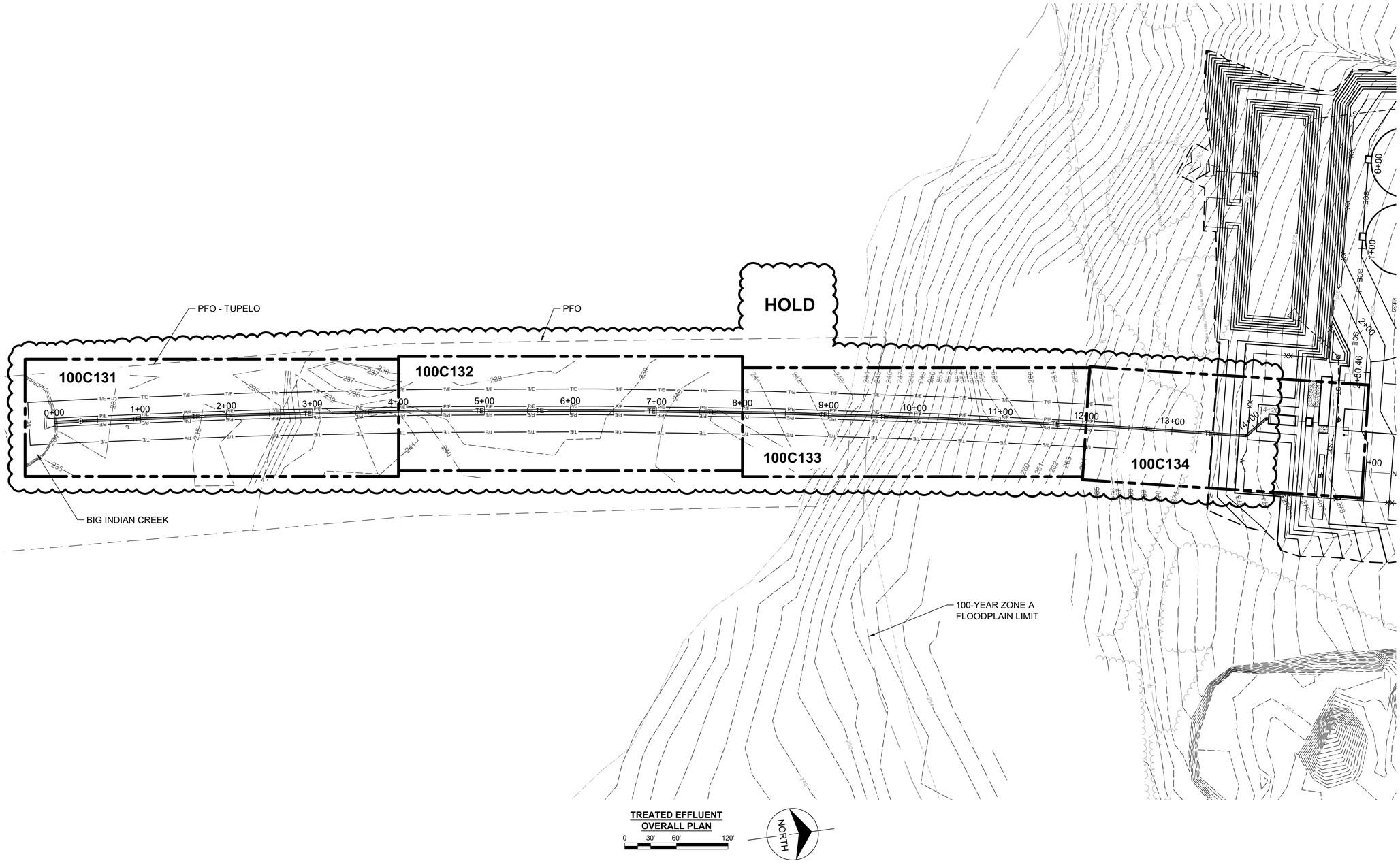

no.	date	by	ckd	description
0	6/26/24	MJC	JLG	ISSUED FOR CONSTRUCTION

BURNS McDONNELL
4004 SUMMIT BLVD. NE, SUITE 1200
ATLANTA, GA 30319
770-587-4776
LICENSEE NO. PEF000100
AUTHORIZATION NO. J550903

date	detailed
MARCH 13, 2023	M. ELENGEBAWY
designed	checked
M. CANULL	J. GARDER

Perry

HOUSTON COUNTY, GEORGIA

GEORGIA REGISTERED No. PE051692 PROFESSIONAL ENGINEER MICHAEL CANULL

2024.06.26 15:42:10-05'00'

EAST PERRY WWTF

TREATED EFFLUENT
OVERALL PLAN

project	contract
148538	

drawing **100C130** – rev. **0**

sheet of sheets

file 148538C131_TE OVERALL SITE PLAN.DWG

Z:\CLIENTS\WTR\PERRYGA\148538_EASTWWTP\DESIGN\CADD\CIVIL\PROD_DWGS\148538C131_TE OVERALL SITE PLAN.DWG 6/19/2024 2:25 PM MTOOLEN

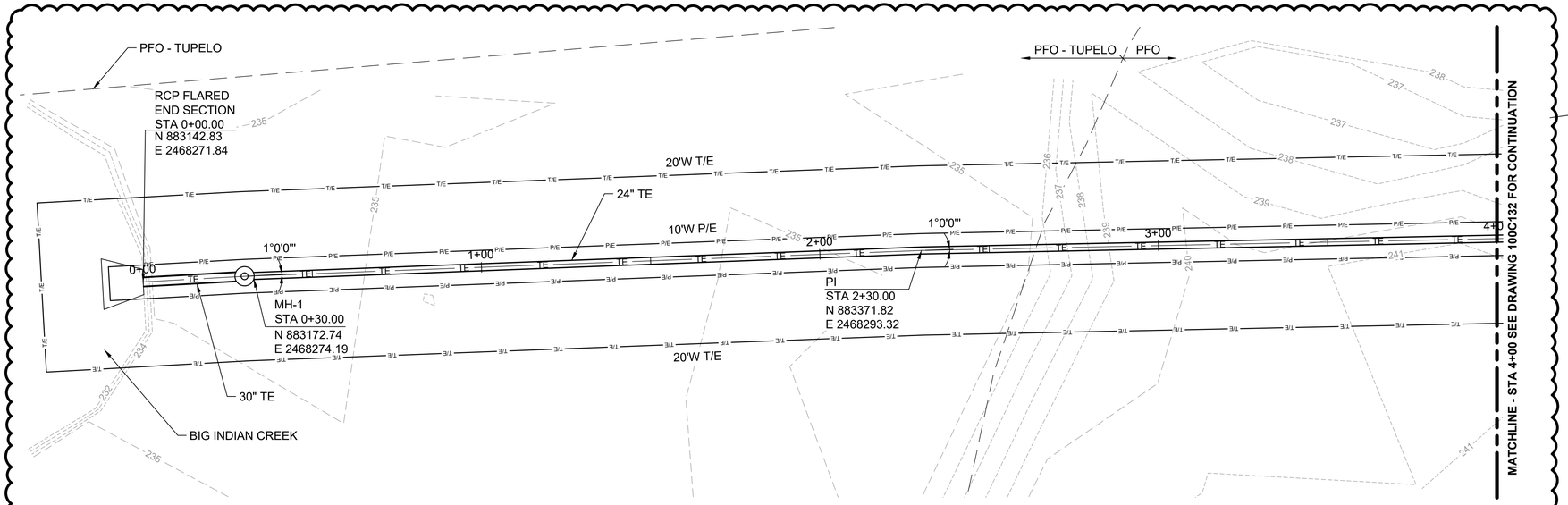

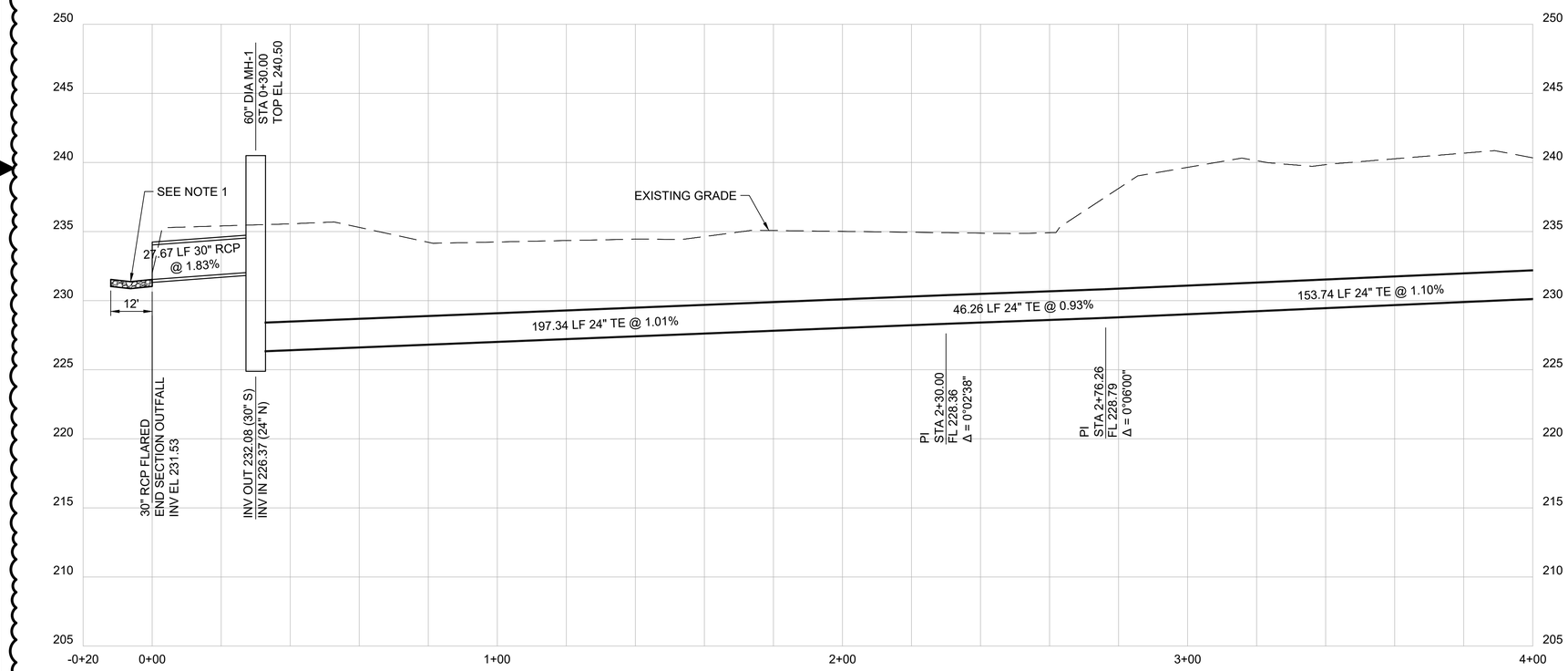

HOLD

NOTE:

1. FORM RIPRAP TO SHAPE OF EXISTING CREEK CHANNEL. MATCH TOP OF RIP RAP WITH EXISTING GRADE / FLOWLINE OF CREEK.

0 10' 20' 40'
SCALE 1" = 20' HORIZ.

0 5' 10'
SCALE 1"=5' VERT

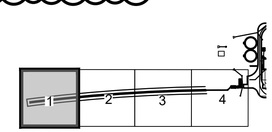

KEY MAP

GEORGIA REGISTERED No. PE051692 PROFESSIONAL ENGINEER MICHAEL CANULL

2024.06.26 15:42:10-05'00'

no.	date	by	ckd	description
0	6/26/24	MJC	JLG	ISSUED FOR CONSTRUCTION

BURNS McDONNELL
4004 SUMMIT BLVD. NE, SUITE 1200
ATLANTA, GA 30319
770-587-4776
LICENSEE NO. PEF000100
AUTHORIZATION NO. J550903

date	detailed
MARCH 13, 2023	M. ELENGEBAWY
designed	checked
M. CANULL	J. GARDER

Perry

HOUSTON COUNTY, GEORGIA

EAST PERRY WWTF

TREATED EFFLUENT
PLAN AND PROFILE
STA 0+00 TO STA 4+00

project	contract
148538	

drawing **100C131** — rev. **0**

sheet of sheets

file 148538C131_PNP_TE.DWG

Z:\CLIENTS\WTR\PERRYGA\148538_EASTWWTP\DESIGN\CADD\CIVIL\PROD_DWGS\148538C131_PNP_TE.DWG 6/19/2024 2:35 PM MTOOLEN

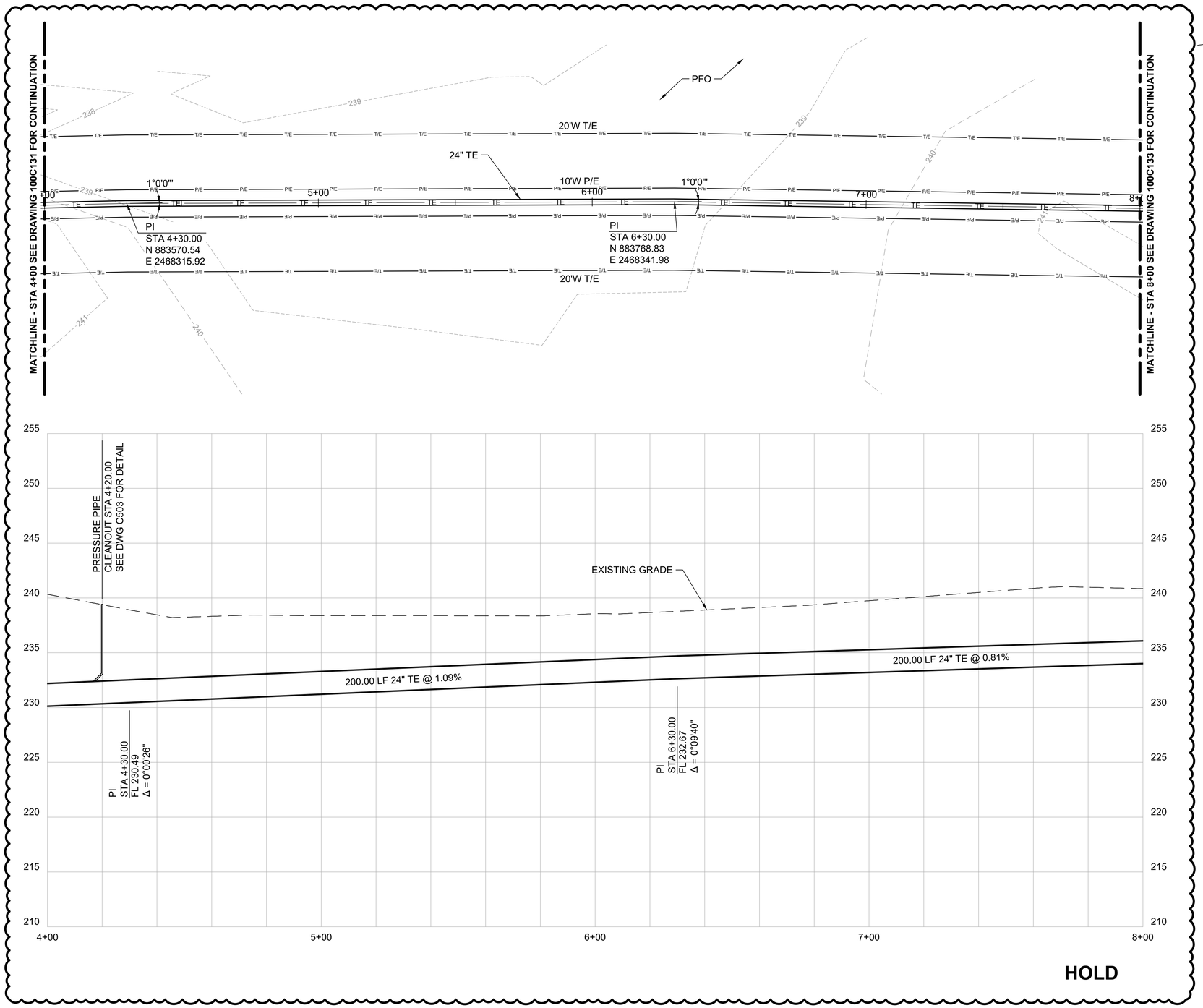

0 10' 20' 40'
SCALE 1" = 20' HORIZ.

0 5' 10'
SCALE 1"=5' VERT

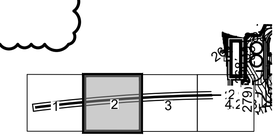

KEY MAP

GEORGIA REGISTERED No. PE051692 PROFESSIONAL ENGINEER MICHAEL CANULL

2024.06.26 15:42:11-05'00'

no.	date	by	ckd	description
0	6/26/24	MJC	JLG	ISSUED FOR CONSTRUCTION

BURNS McDONNELL
4004 SUMMIT BLVD. NE, SUITE 1200
ATLANTA, GA 30319
770-587-4776
LICENSEE NO. PEF000100
AUTHORIZATION NO. J550903

date	detailed
MARCH 13, 2023	M. ELENGEBAWY
designed	checked
M. CANULL	J. GARDER

Perry
HOUSTON COUNTY, GEORGIA

EAST PERRY WWTF
TREATED EFFLUENT
PLAN AND PROFILE
STA 4+00 TO STA 8+00

project 148538
contract

drawing **100C132 –** rev. **0**

sheet of sheets

file 148538C131_PNP_TE.DWG

Z:\CLIENTS\WTR\PERRYGA\148538_EASTWWTP\DESIGN\CADD\CIVIL\PROD_DWGS\148538C131_PNP_TE.DWG 6/19/2024 2:35 PM MTOOLEN

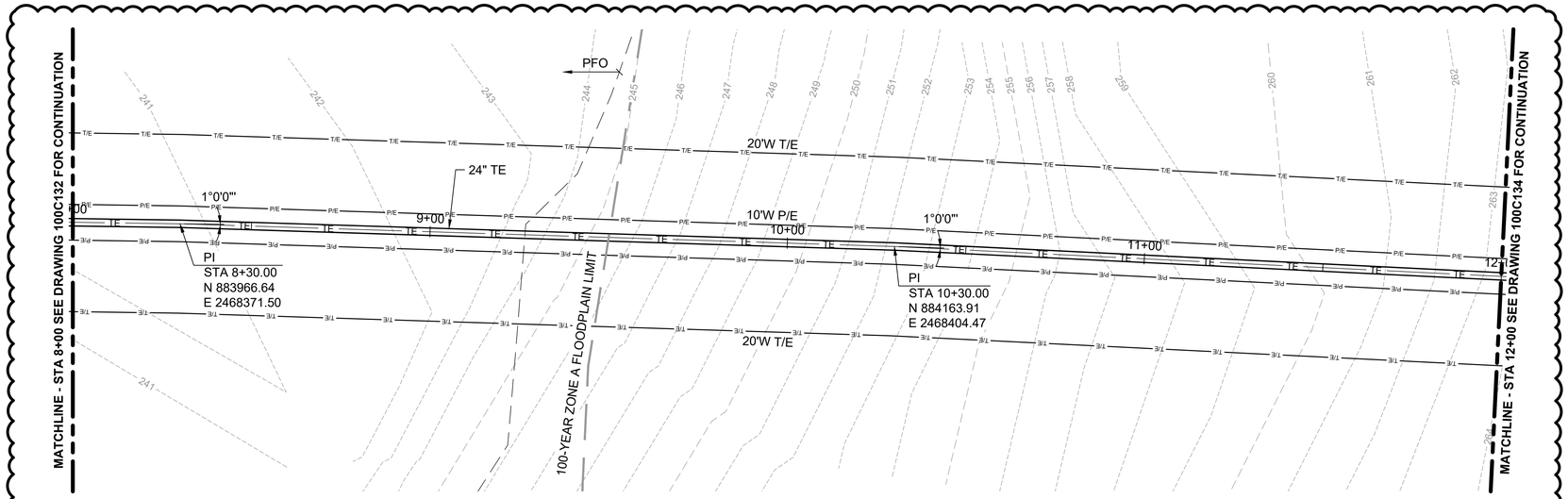

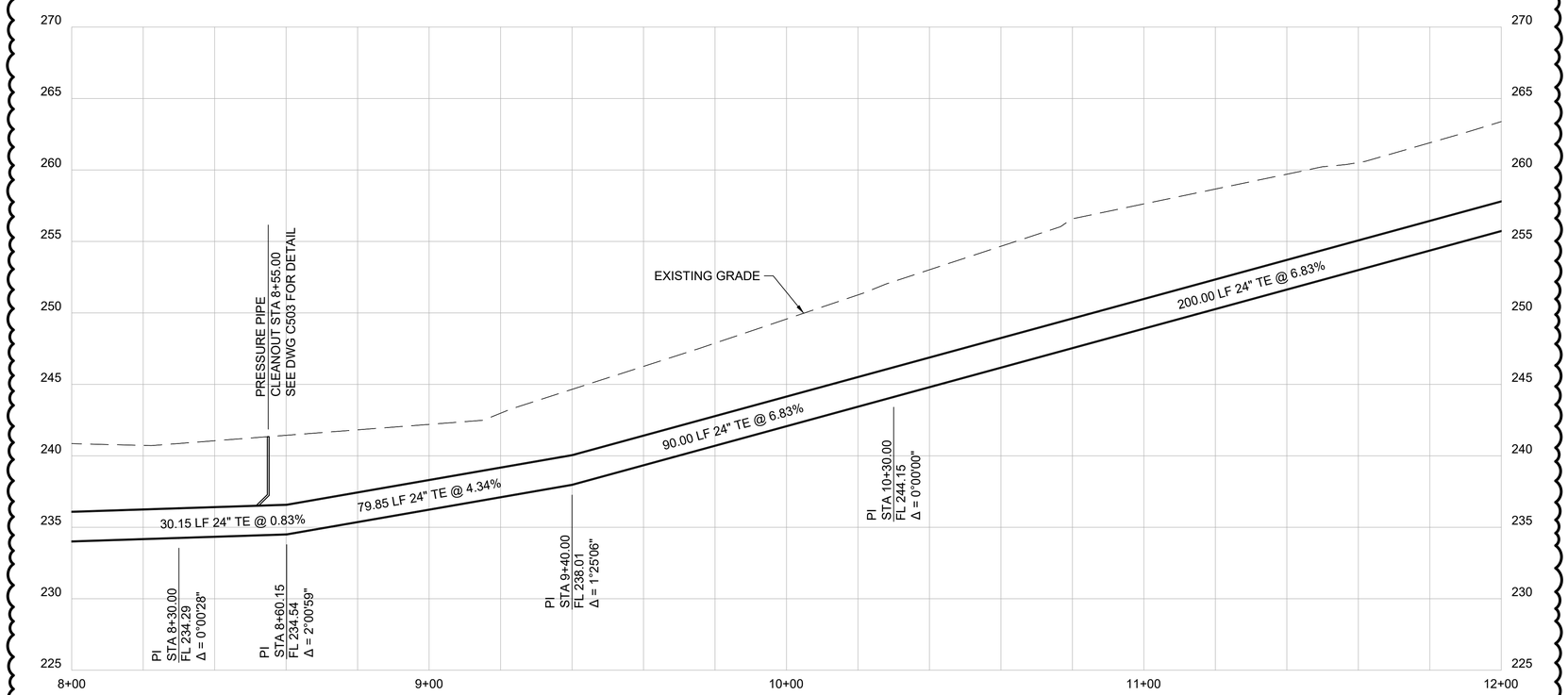

HOLD

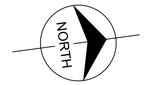

0 10' 20' 40'
SCALE 1" = 20' HORIZ.

0 5' 10'
SCALE 1"=5' VERT

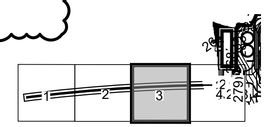

KEY MAP

GEORGIA REGISTERED No. PE051692 PROFESSIONAL ENGINEER MICHAEL CANULL

2024.06.26 15:42:11-05'00'

no.	date	by	ckd	description
0	6/26/24	MJC	JLG	ISSUED FOR CONSTRUCTION

BURNS McDONNELL
4004 SUMMIT BLVD. NE, SUITE 1200
ATLANTA, GA 30319
770-587-4776
LICENSEE NO. PEF000100
AUTHORIZATION NO. J550903

date	detailed
MARCH 13, 2023	M. ELENGEBAWY
designed	checked
M. CANULL	J. GARDER

Perry

HOUSTON COUNTY, GEORGIA

EAST PERRY WWTF

TREATED EFFLUENT
PLAN AND PROFILE
STA 8+00 TO STA 12+00

project	contract
148538	

drawing **100C133** — rev. **0**

sheet of sheets

file 148538C131_PNP_TE.DWG

Z:\CLIENTS\WTR\PERRYGA\148538_EASTWWTP\DESIGN\CADD\CIVIL\PROD_DWGS\148538C131_PNP_TE.DWG 6/19/2024 2:35 PM MTOOLEN

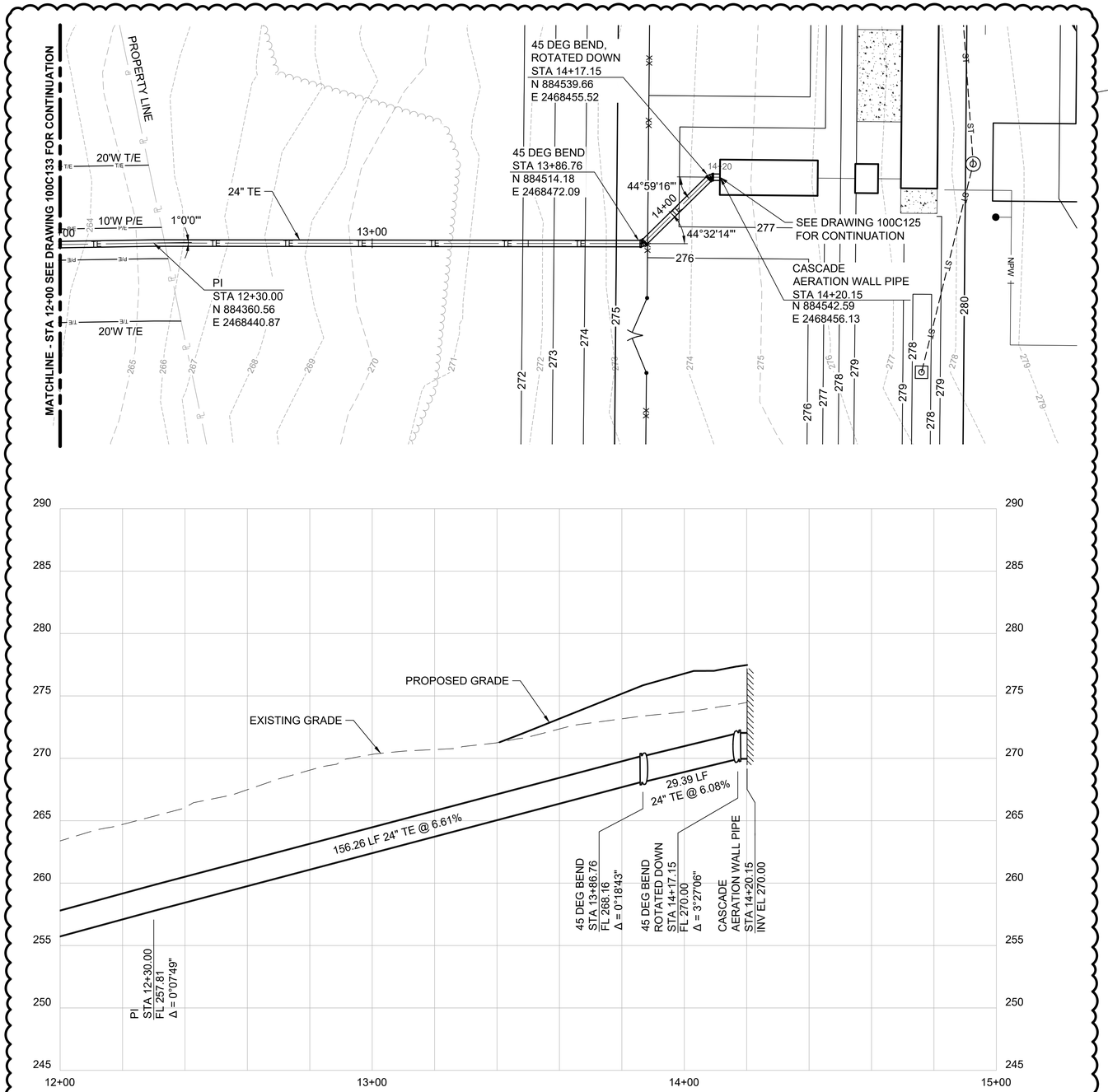

HOLD

no.	date	by	ckd	description
0	6/26/24	MJC	JLG	ISSUED FOR CONSTRUCTION

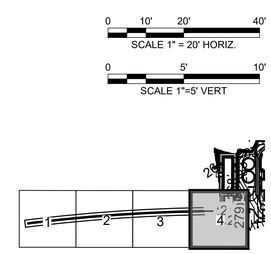

GEORGIA REGISTERED No. PE051692 PROFESSIONAL ENGINEER MICHAEL CANULL

2024.06.26 15:42:12-05'00'

BURNS McDONNELL
4004 SUMMIT BLVD. NE, SUITE 1200
ATLANTA, GA 30319
770-587-4776
LICENSEE NO. PEF000100
AUTHORIZATION NO. J550903

date	detailed
MARCH 13, 2023	M. ELENGEBAWY
designed	checked
M. CANULL	J. GARDER

Perry

HOUSTON COUNTY, GEORGIA

EAST PERRY WWTF
TREATED EFFLUENT
PLAN AND PROFILE
STA 12+00 TO EOL STA 14+20.15

project	contract
148538	

drawing **100C134 –** rev. **0**

sheet of sheets

file 148538C131_PNP_TE.DWG

Z:\CLIENTS\WTR\PERRYGA\148538_EASTWWTP\DESIGN\CADD\CIVIL\PROD_DWGS\148538C131_PNP_TE.DWG 6/19/2024 2:35 PM MTOOLEN

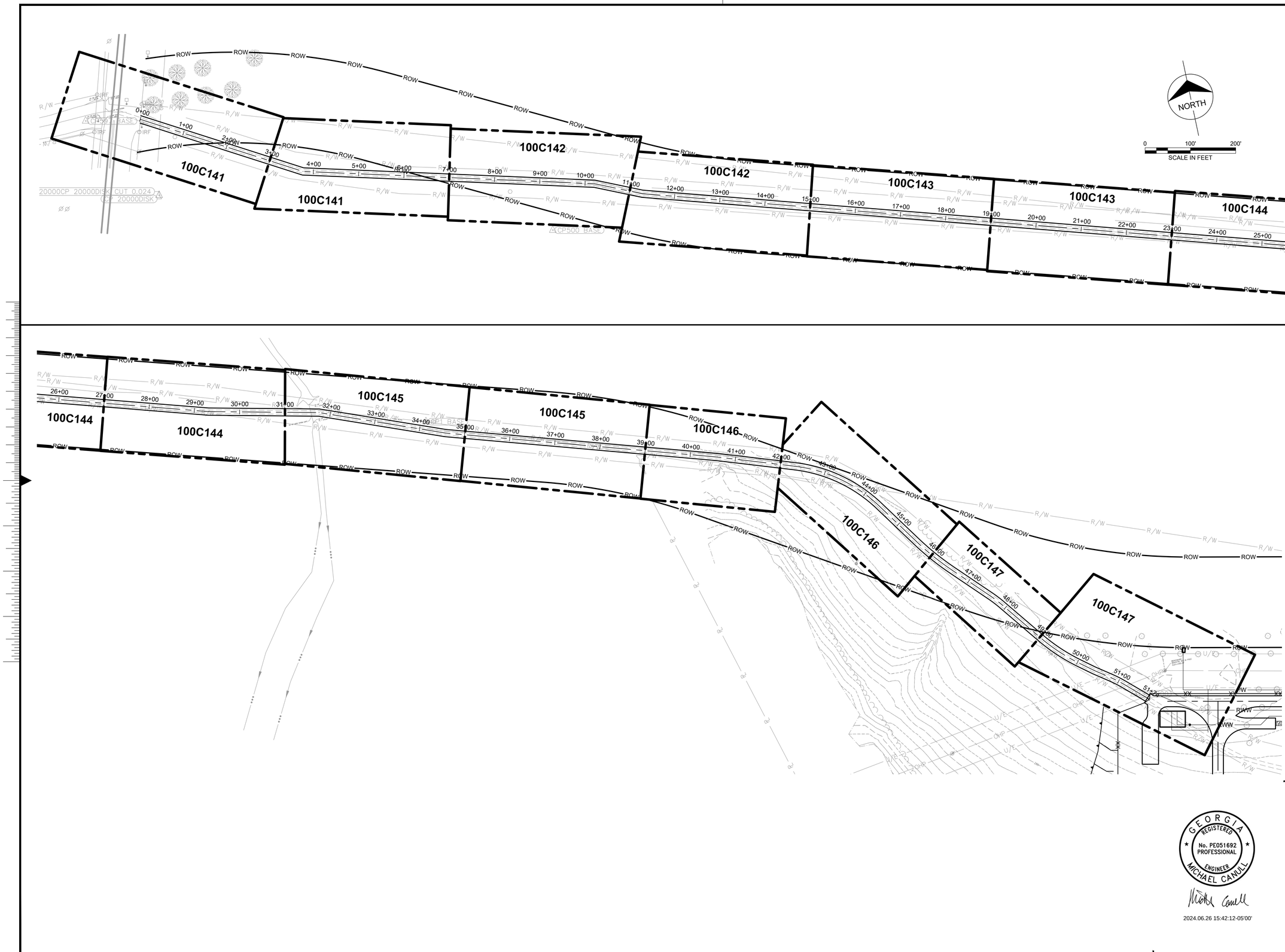

no.	date	by	ckd	description
0	6/26/24	MJC	JLG	ISSUED FOR CONSTRUCTION

BURNS McDONNELL
4004 SUMMIT BLVD. NE, SUITE 1200
ATLANTA, GA 30319
770-587-4776
LICENSEE NO. PEF000100
AUTHORIZATION NO. J550903

date	detailed
MARCH 13, 2023	M. ELENGEBAWY
designed	checked
M. CANULL	J. GARDER

Perry

HOUSTON COUNTY, GEORGIA

GEORGIA REGISTERED No. PE051692 PROFESSIONAL ENGINEER MICHAEL CANULL

2024.06.26 15:42:12-05'00'

EAST PERRY WWTF

OVERALL CONSTRUCTION
ACCESS DRIVE PLAN

project	contract
148538	

drawing **100C140** — rev. **0**

sheet of sheets

file 148538_OVERALL ROADWAY PLAN.DWG

Z:\CLIENTS\WTR\PERRYGA\148538_EASTWWTP\DESIGN\CADD\CIVIL\PROD_DWGS\148538_OVERALL ROADWAY PLAN.DWG 6/19/2024 2:37 PM MTOOLEN

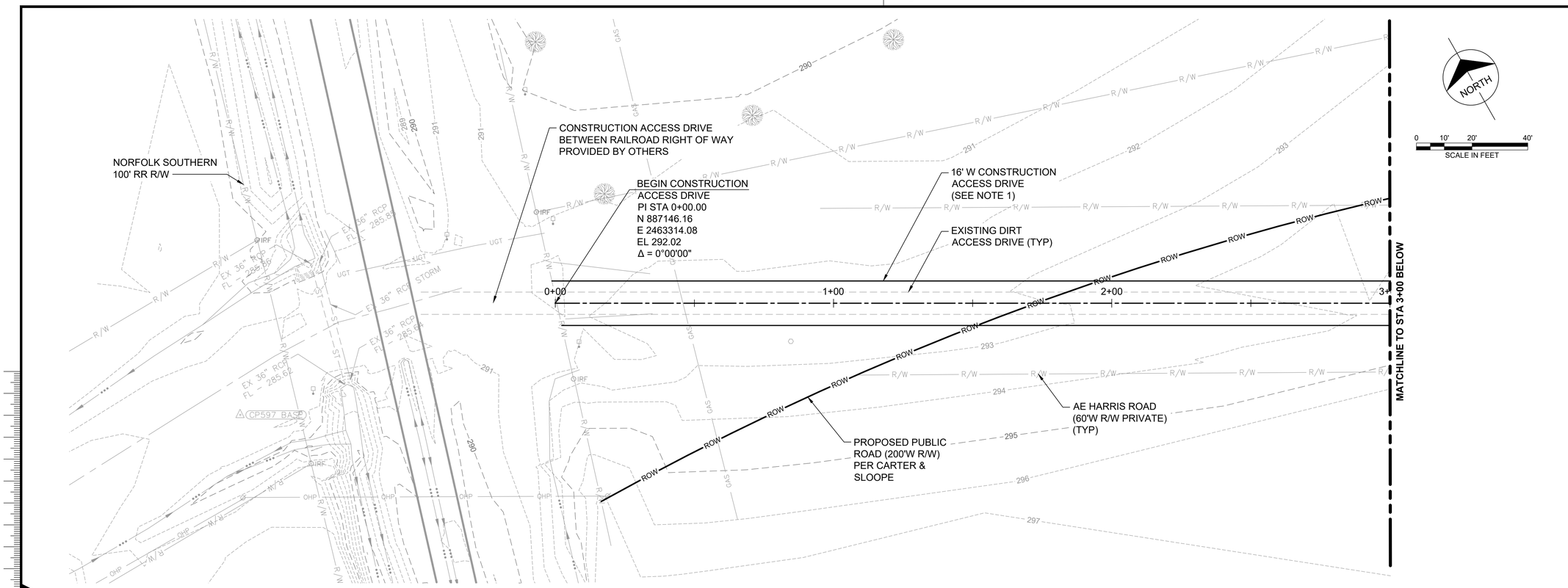

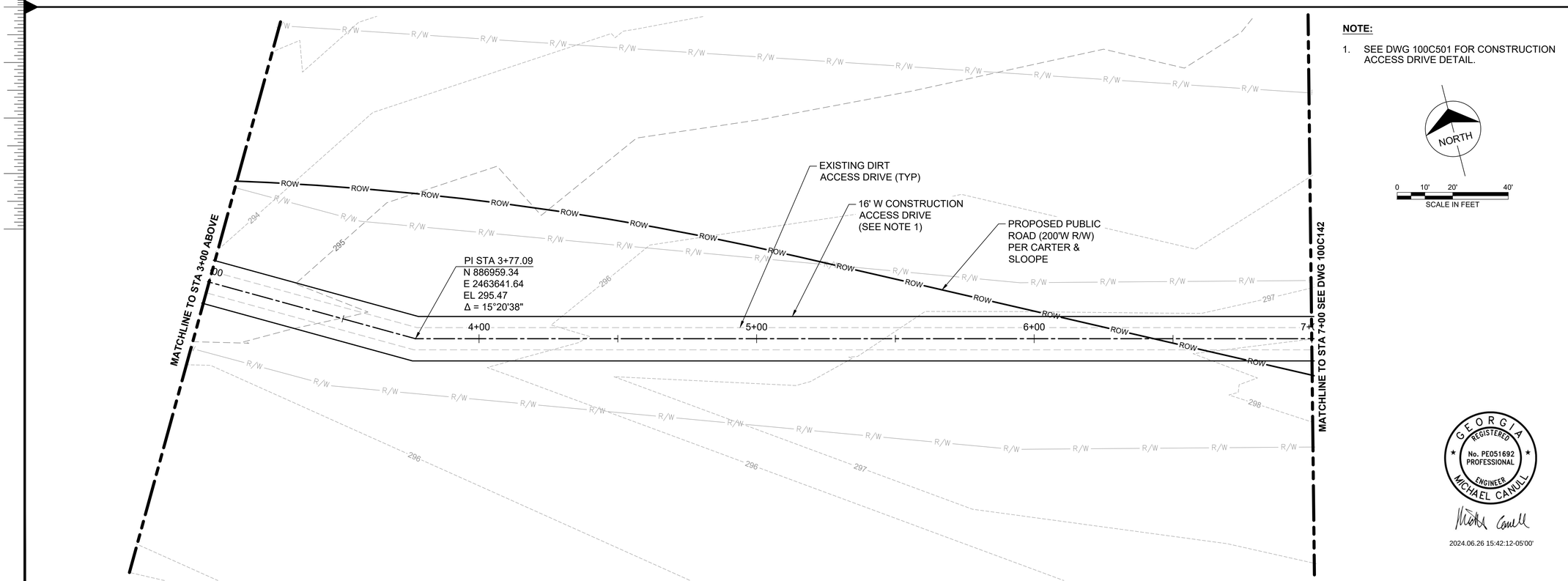

NOTE:

1. SEE DWG 100C501 FOR CONSTRUCTION ACCESS DRIVE DETAIL.

no.	date	by	ckd	description
0	6/26/24	MJC	JLG	ISSUED FOR CONSTRUCTION

BURNS McDONNELL
4004 SUMMIT BLVD. NE, SUITE 1200
ATLANTA, GA 30319
770-587-4776
LICENSEE NO. PEF000100
AUTHORIZATION NO. J550903

date	detailed
MARCH 13, 2023	M. ELENGEBAWY
designed	checked
M. CANULL	J. GARDER

Perry

HOUSTON COUNTY, GEORGIA

GEORGIA REGISTERED No. PE051692 PROFESSIONAL ENGINEER MICHAEL CANULL

2024.06.26 15:42:12-05'00'

EAST PERRY WWTF
CIVIL CONSTRUCTION
ACCESS DRIVE PLAN
SHEET 1

project	contract
148538	

drawing **100C141** – rev. **0**

sheet of sheets

file 148538_ROADWAY PLANS.DWG

Z:\CLIENTS\WTR\PERRYGA\148538_EASTWWTP\DESIGN\CADD\CIVIL\PROD_DWGS\148538_ROADWAY PLANS.DWG 6/20/2024 8:14 AM MTOOLEN

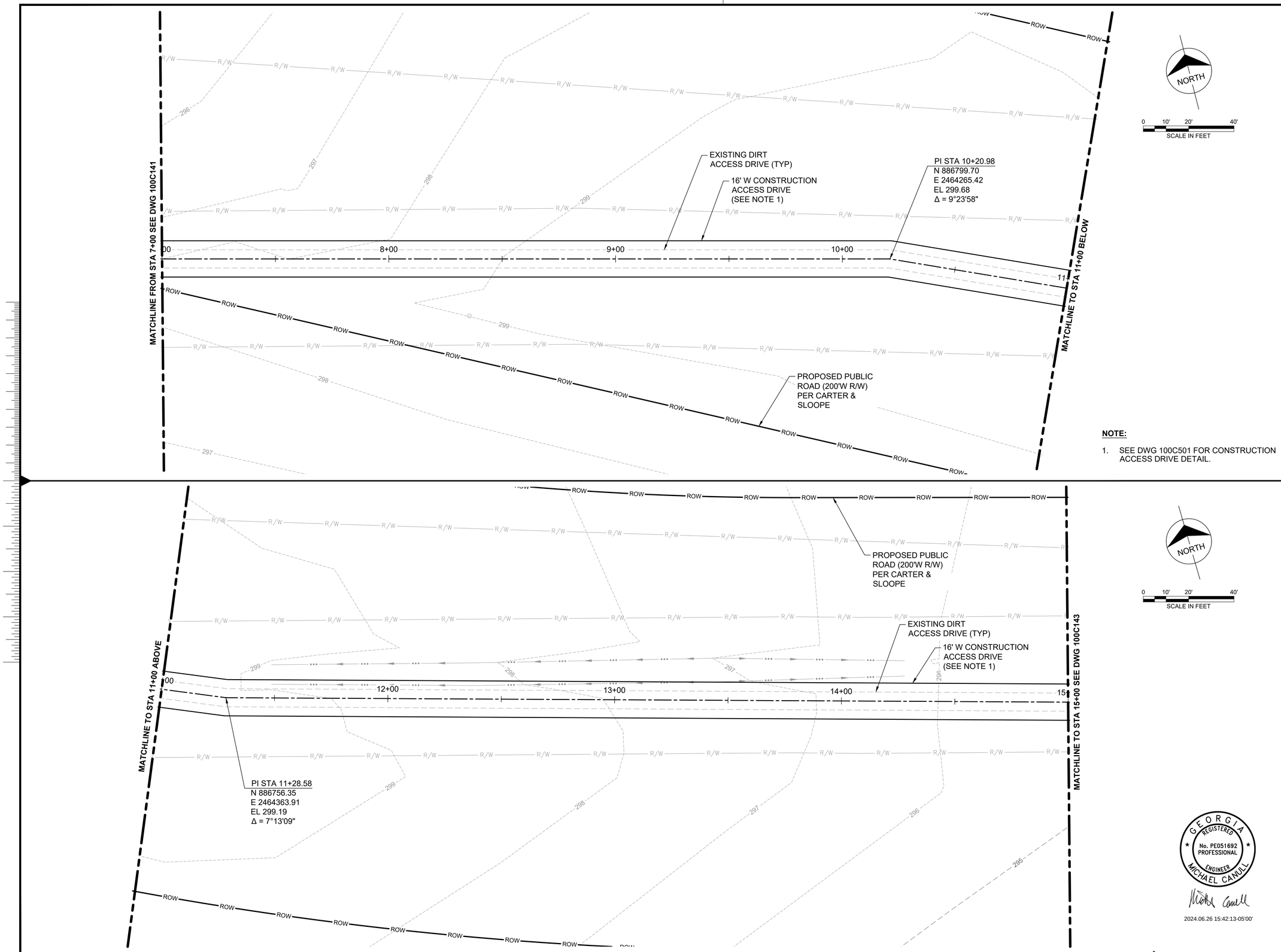

NOTE:

1. SEE DWG 100C501 FOR CONSTRUCTION ACCESS DRIVE DETAIL.

no.	date	by	ckd	description
0	6/26/24	MJC	JLG	ISSUED FOR CONSTRUCTION

BURNS McDONNELL
4004 SUMMIT BLVD. NE, SUITE 1200
ATLANTA, GA 30319
770-587-4776
LICENSEE NO. PEF000100
AUTHORIZATION NO. J550903

date	detailed
MARCH 13, 2023	M. ELENGEBAWY
designed	checked
M. CANULL	J. GARDER

Perry

HOUSTON COUNTY, GEORGIA

GEORGIA REGISTERED No. PE051692 PROFESSIONAL ENGINEER MICHAEL CANULL

2024.06.26 15:42:13-05'00'

EAST PERRY WWTF
CIVIL CONSTRUCTION
ACCESS DRIVE PLAN
SHEET 2

project	contract
148538	

drawing **100C142 –** rev. **0**

sheet of sheets

file 148538_ROADWAY PLANS.DWG

Z:\CLIENTS\WTR\PERRYGA\148538_EASTWWTP\DESIGN\CADD\CIVIL\PROD_DWGS\148538_ROADWAY PLANS.DWG 6/20/2024 8:14 AM MTOOLEN

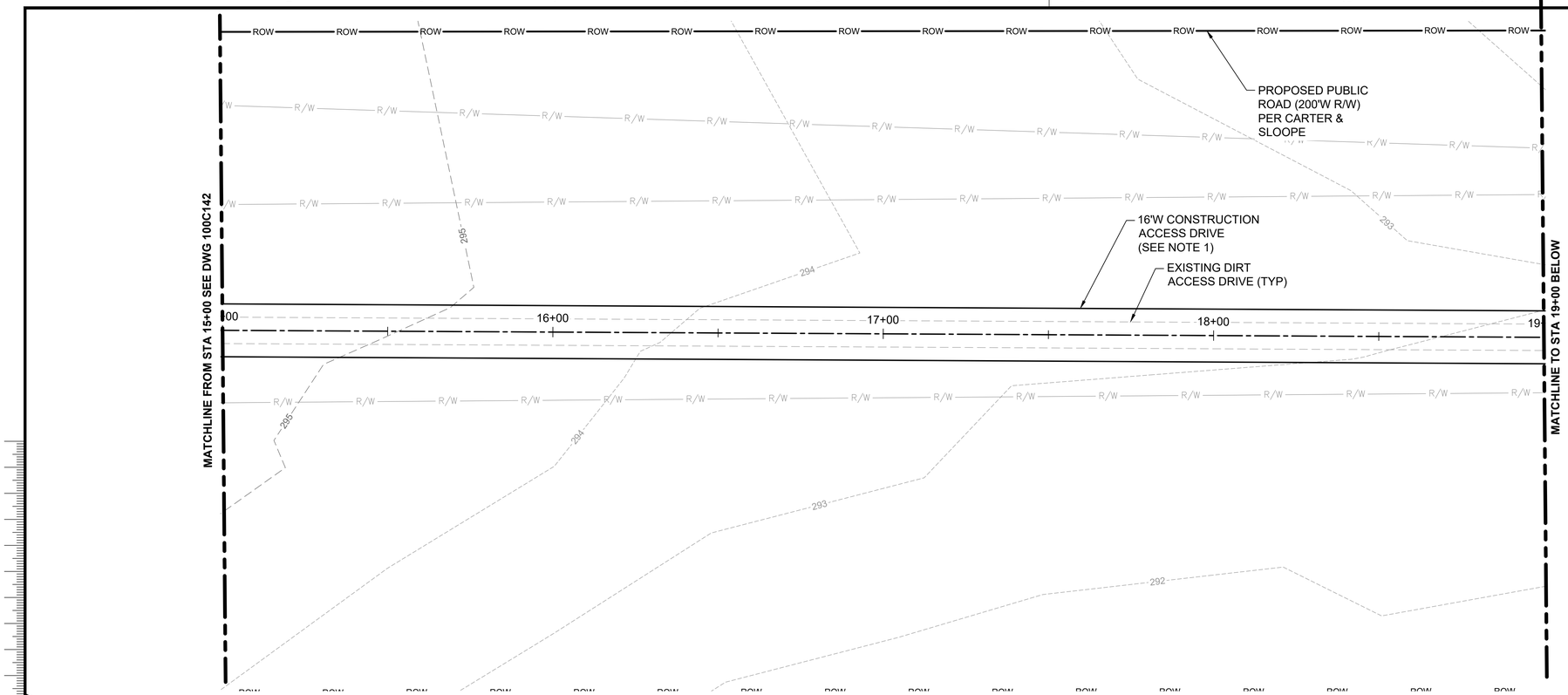

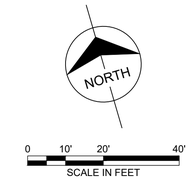

NOTE:

1. SEE DWG 100C501 FOR CONSTRUCTION ACCESS DRIVE DETAIL.

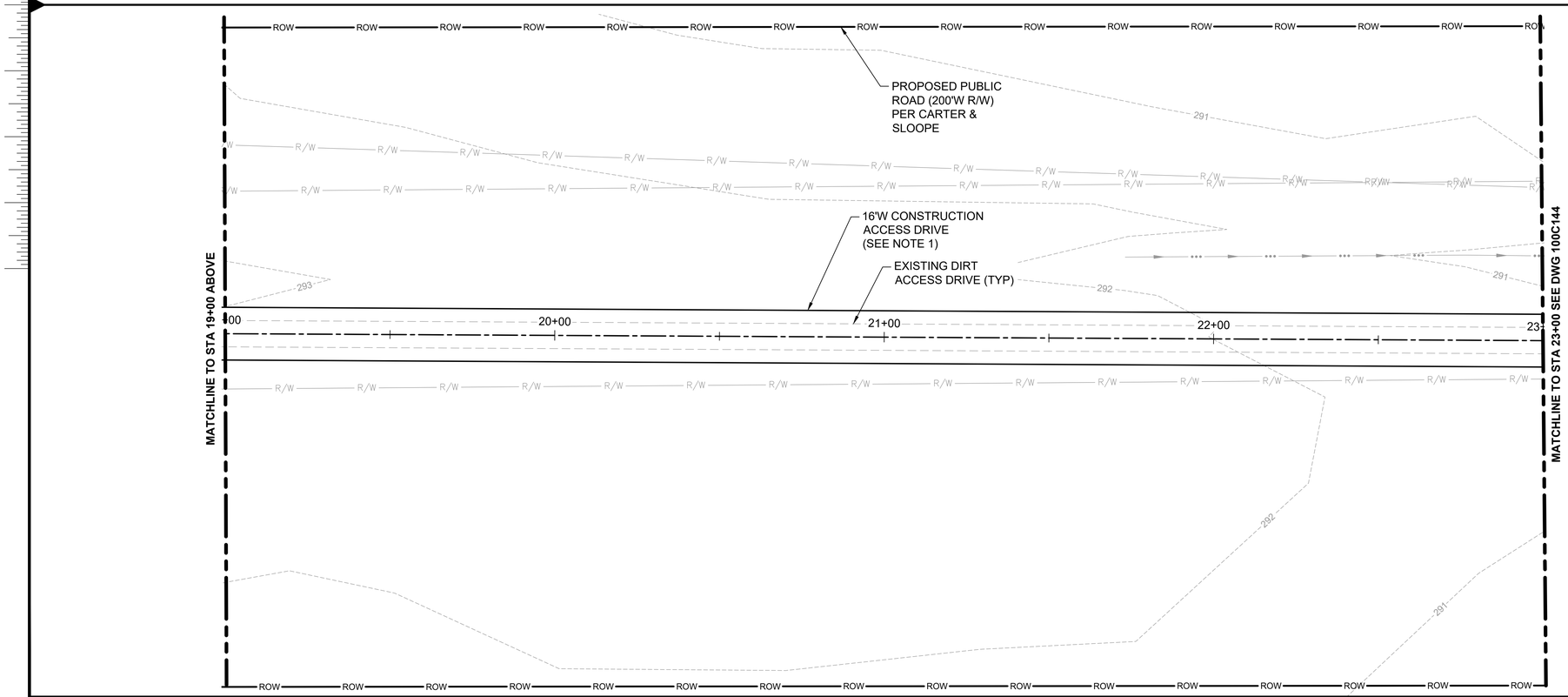

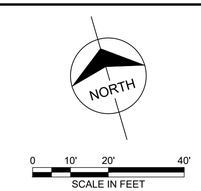

no.	date	by	ckd	description
0	6/26/24	MJC	JLG	ISSUED FOR CONSTRUCTION

BURNS McDONNELL
4004 SUMMIT BLVD. NE, SUITE 1200
ATLANTA, GA 30319
770-587-4776
LICENSEE NO. PEF000100
AUTHORIZATION NO. J550903

date	detailed
MARCH 13, 2023	M. ELENGEBAWY
designed	checked
M. CANULL	J. GARDER

Perry

HOUSTON COUNTY, GEORGIA

GEORGIA REGISTERED No. PE051692 PROFESSIONAL ENGINEER MICHAEL CANULL

2024.06.26 15:42:13-05'00'

EAST PERRY WWTF
CIVIL CONSTRUCTION
ACCESS DRIVE PLAN
SHEET 3

project	contract
148538	

drawing **100C143** – rev. **0**

sheet of sheets

file 148538_ROADWAY PLANS.DWG

Z:\CLIENTS\WTR\PERRYGA\148538_EASTWWTP\DESIGN\CADD\CIVIL\PROD_DWGS\148538_ROADWAY PLANS.DWG 6/20/2024 8:14 AM MTOOLEN

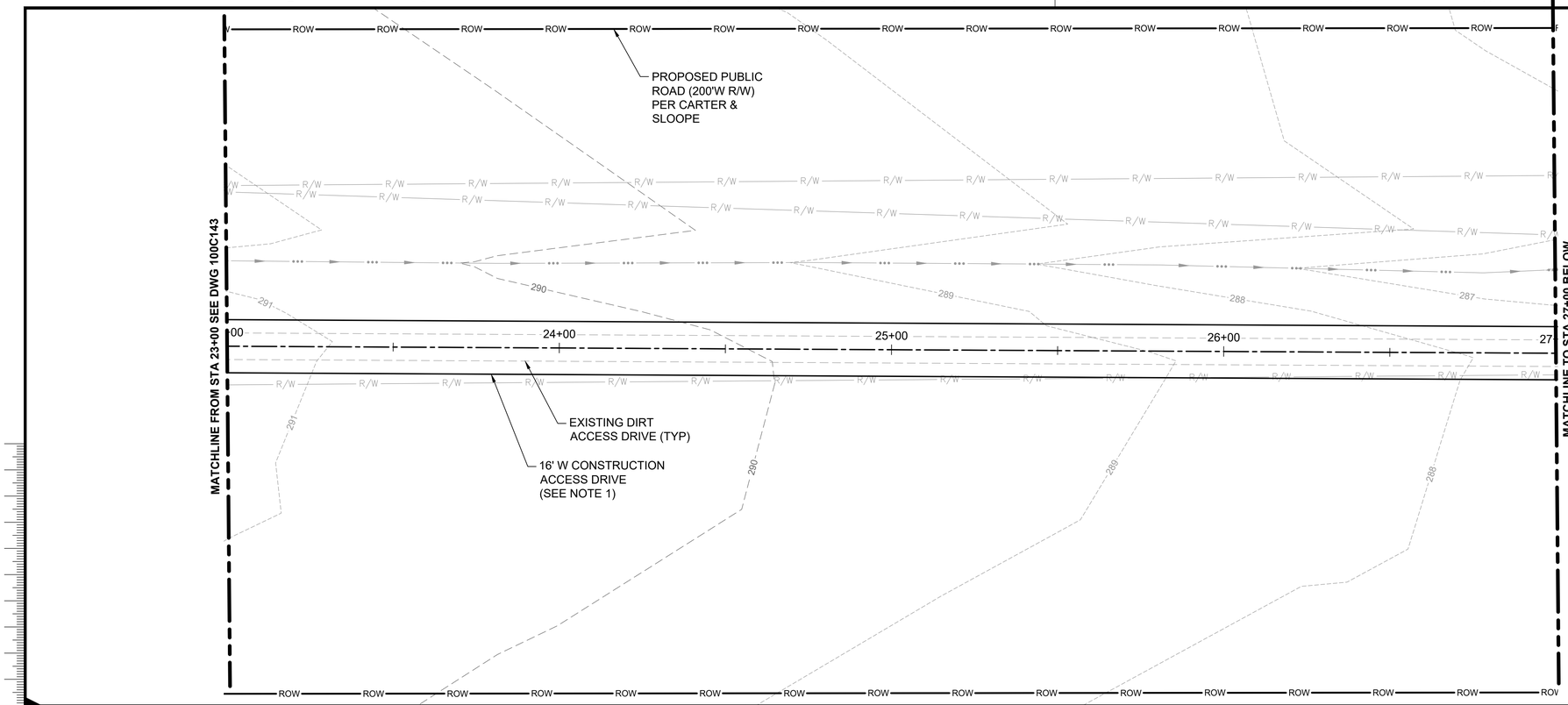

NOTE:

1. SEE DWG 100C501 FOR CONSTRUCTION ACCESS DRIVE DETAIL.

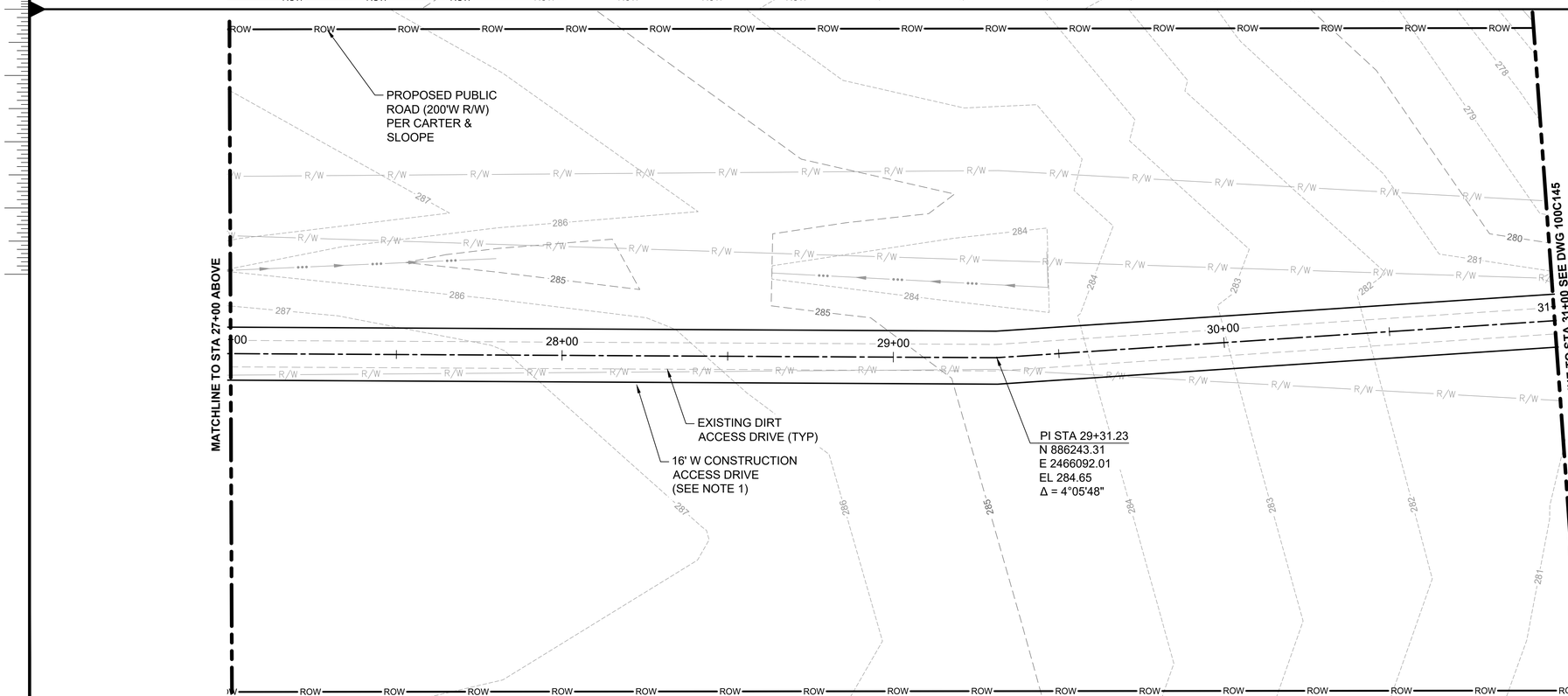

no.	date	by	ckd	description
0	6/26/24	MJC	JLG	ISSUED FOR CONSTRUCTION

BURNS McDONNELL
4004 SUMMIT BLVD. NE, SUITE 1200
ATLANTA, GA 30319
770-587-4776
LICENSEE NO. PEF000100
AUTHORIZATION NO. J550903

date	detailed
MARCH 13, 2023	M. ELENGEBAWY
designed	checked
M. CANULL	J. GARDER

Perry

HOUSTON COUNTY, GEORGIA

GEORGIA REGISTERED No. PE051692 PROFESSIONAL ENGINEER MICHAEL CANULL

2024.06.26 15:42:14-05'00'

EAST PERRY WWTF
CIVIL CONSTRUCTION
ACCESS DRIVE PLAN
SHEET 4

project	contract
148538	

drawing **100C144 –** rev. **0**

sheet of sheets

file 148538_ROADWAY PLANS.DWG

Z:\CLIENTS\WTR\PERRYGA\148538_EASTWWTP\DESIGN\CADD\CIVIL\PROD_DWGS\148538_ROADWAY PLANS.DWG 6/20/2024 8:14 AM MTOOLEN

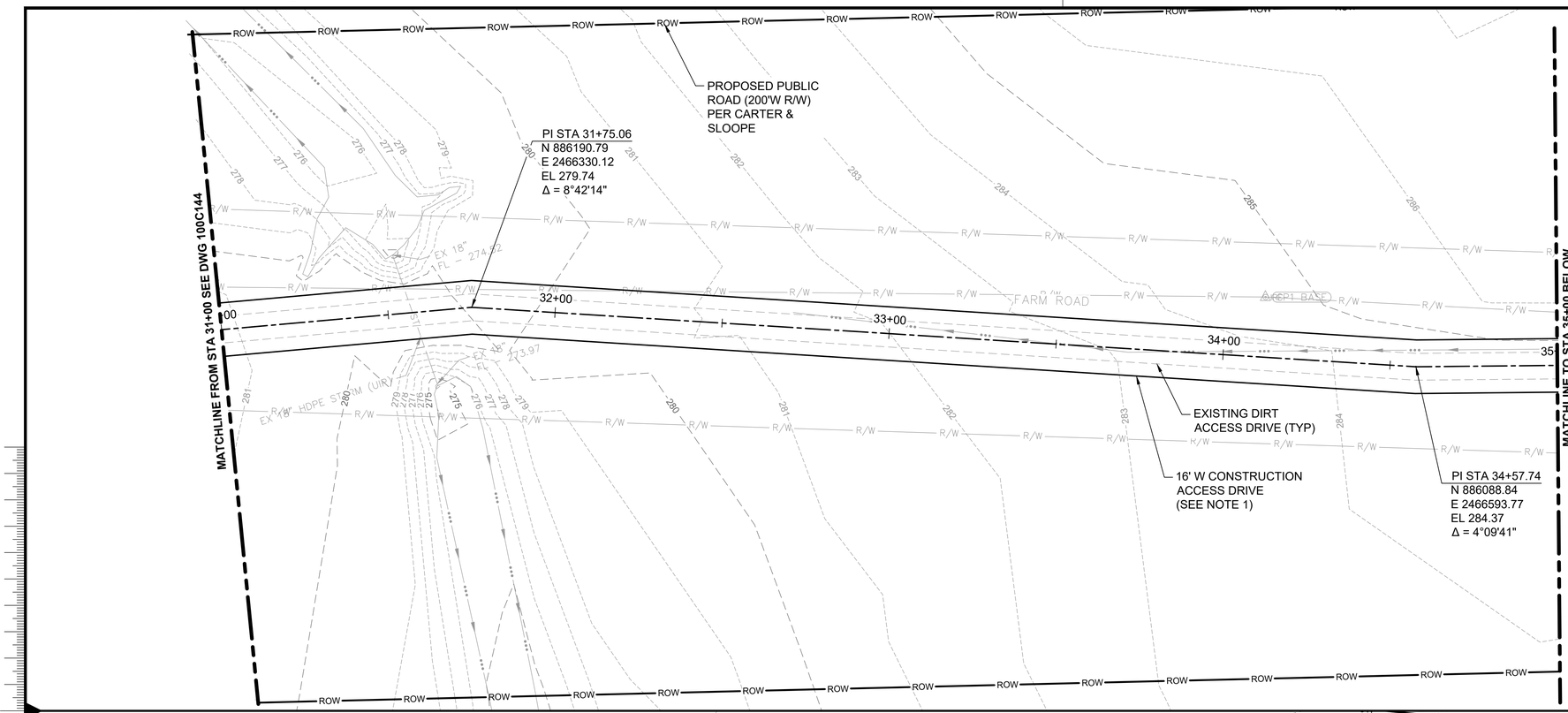

NOTE:

1. SEE DWG 100C501 FOR CONSTRUCTION ACCESS DRIVE DETAIL.

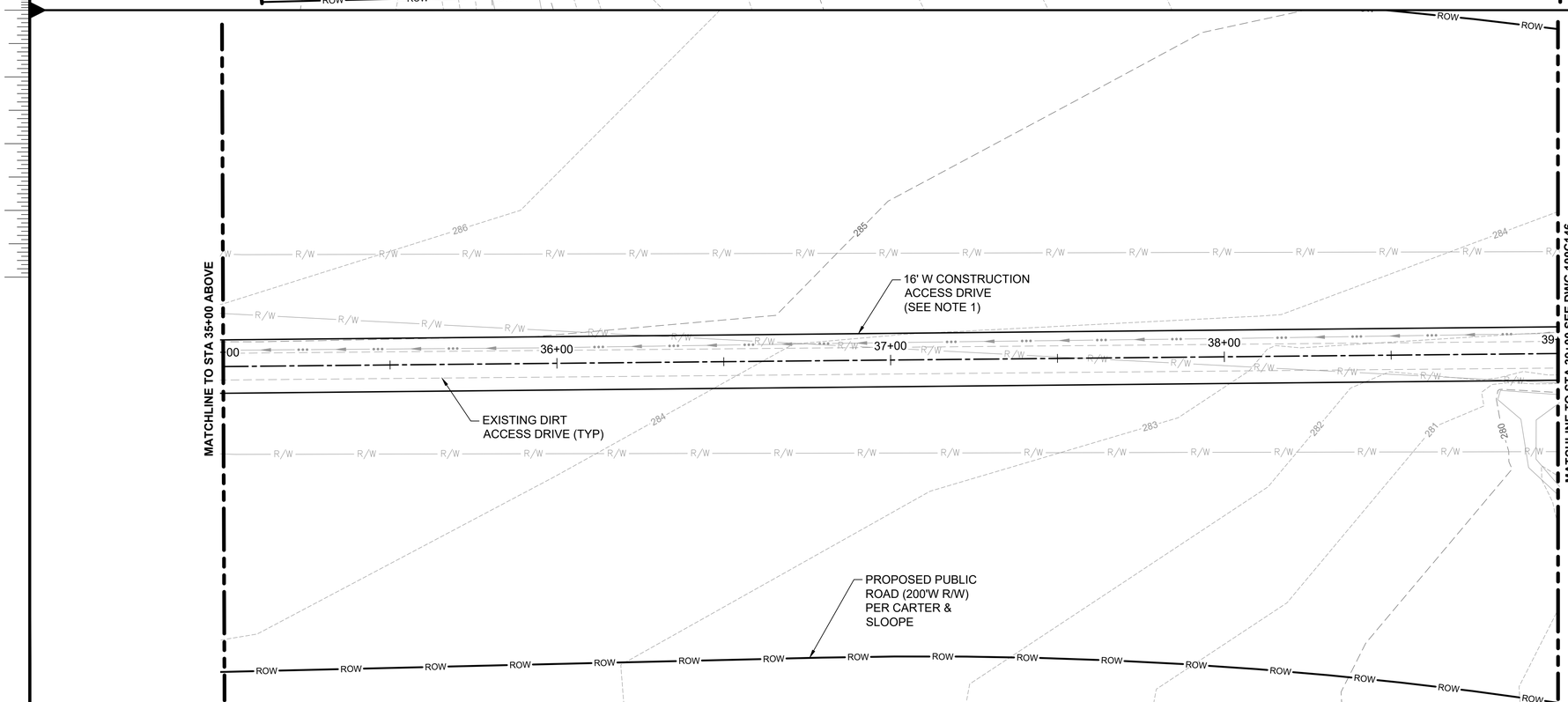

no.	date	by	ckd	description
0	6/26/24	MJC	JLG	ISSUED FOR CONSTRUCTION

BURNS McDONNELL
4004 SUMMIT BLVD. NE, SUITE 1200
ATLANTA, GA 30319
770-587-4776
LICENSEE NO. PEF000100
AUTHORIZATION NO. J550903

date	detailed
MARCH 13, 2023	M. ELENGEBAWY
designed	checked
M. CANULL	J. GARDER

Perry

HOUSTON COUNTY, GEORGIA

GEORGIA REGISTERED No. PE051692 PROFESSIONAL ENGINEER MICHAEL CANULL

2024.06.26 15:42:14-05'00'

EAST PERRY WWTF
CIVIL CONSTRUCTION
ACCESS DRIVE PLAN
SHEET 5

project	contract
148538	

drawing **100C145** – rev. **0**

sheet of sheets

file 148538_ROADWAY PLANS.DWG

Z:\CLIENTS\WTR\PERRYGA\148538_EASTWWTP\DESIGN\CADD\CIVIL\PROD_DWGS\148538_ROADWAY PLANS.DWG 6/20/2024 8:14 AM MTOOLEN

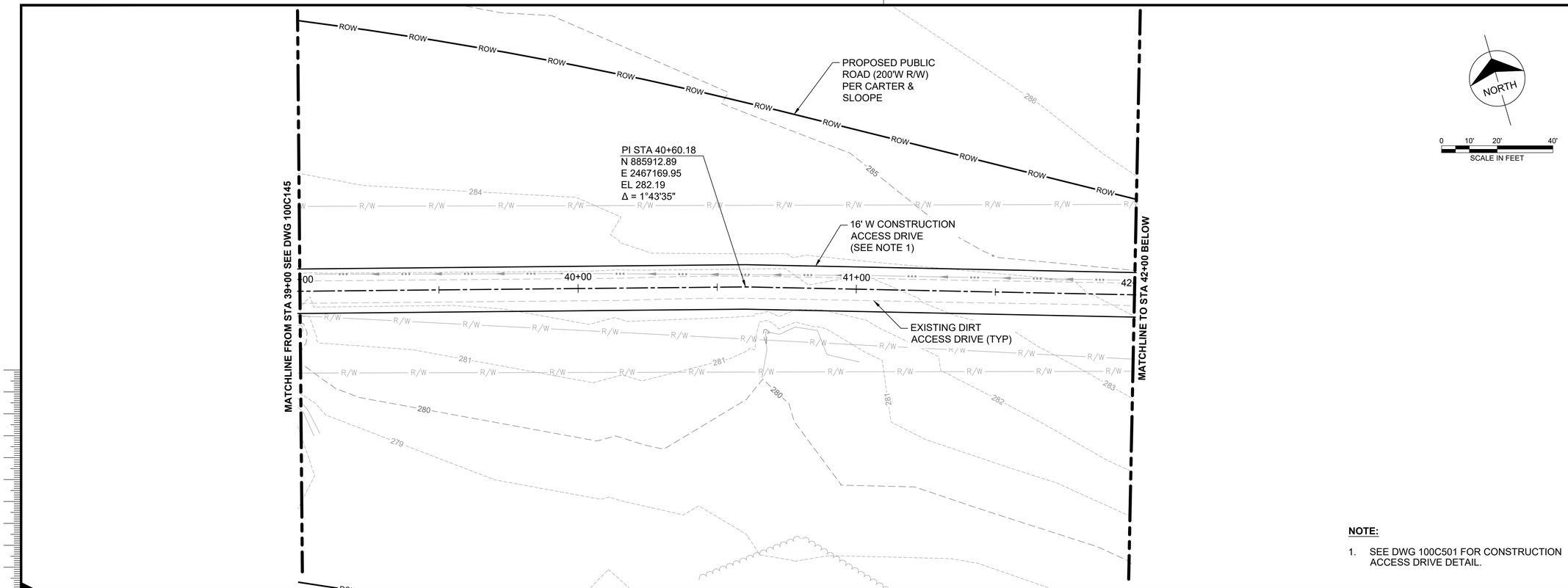

NOTE:

1. SEE DWG 100C501 FOR CONSTRUCTION ACCESS DRIVE DETAIL.

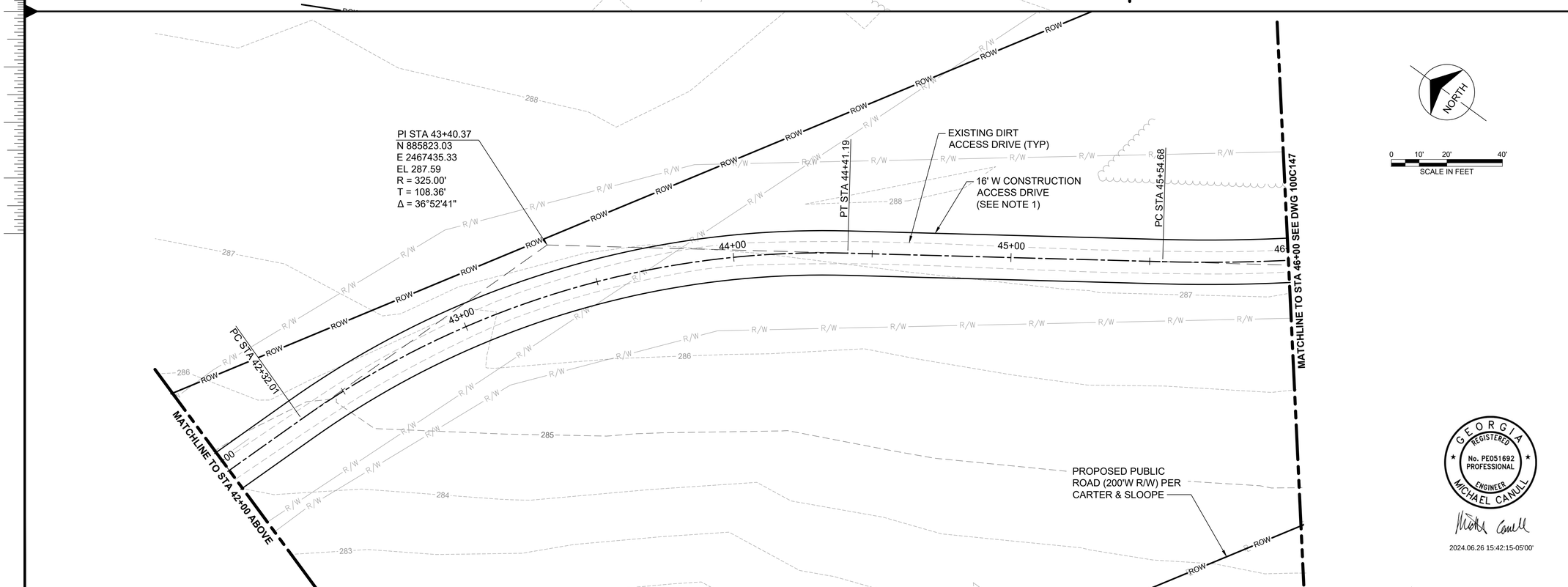

no.	date	by	ckd	description
0	6/26/24	MJC	JLG	ISSUED FOR CONSTRUCTION

BURNS McDONNELL
4004 SUMMIT BLVD. NE, SUITE 1200
ATLANTA, GA 30319
770-587-4776
LICENSEE NO. PEF000100
AUTHORIZATION NO. J550903

date	detailed
MARCH 13, 2023	M. ELENGEBAWY
designed	checked
M. CANULL	J. GARDER

Perry

HOUSTON COUNTY, GEORGIA

GEORGIA REGISTERED No. PE051692 PROFESSIONAL ENGINEER MICHAEL CANULL

2024.06.26 15:42:15-05'00'

EAST PERRY WWTF
CIVIL CONSTRUCTION
ACCESS DRIVE PLAN
SHEET 6

project	contract
148538	

drawing **100C146** — rev. **0**

sheet of sheets

file 148538_ROADWAY PLANS.DWG

Z:\CLIENTS\WTR\PERRYGA\148538_EASTWWTP\DESIGN\CADD\CIVIL\PROD_DWGS\148538_ROADWAY PLANS.DWG 6/20/2024 8:14 AM MTOOLEN

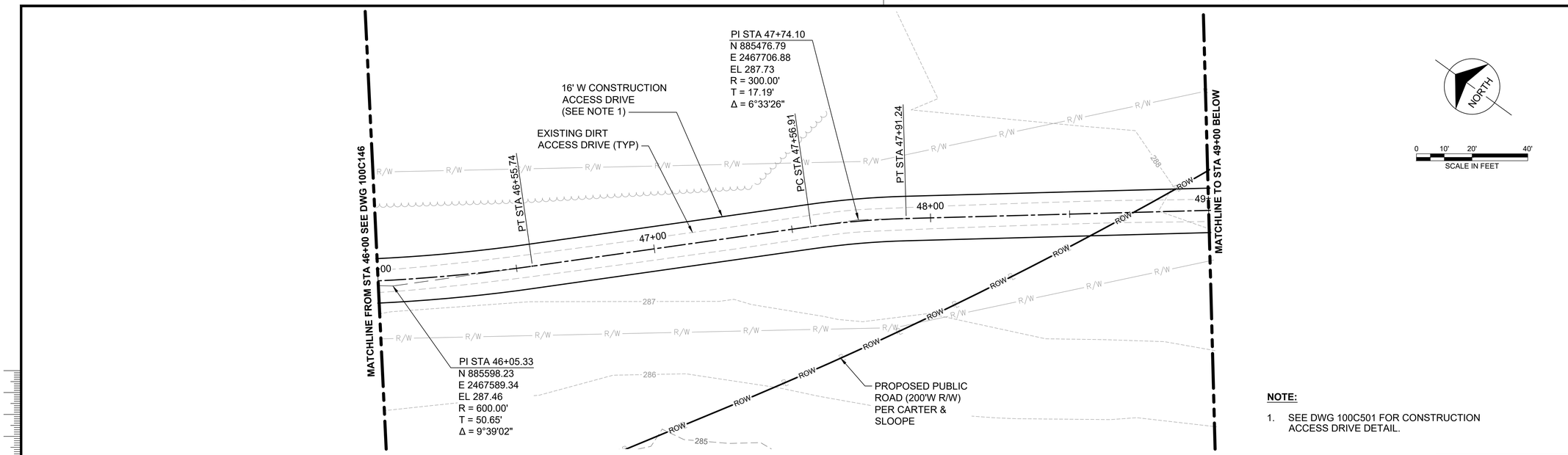

NOTE:

1. SEE DWG 100C501 FOR CONSTRUCTION ACCESS DRIVE DETAIL.

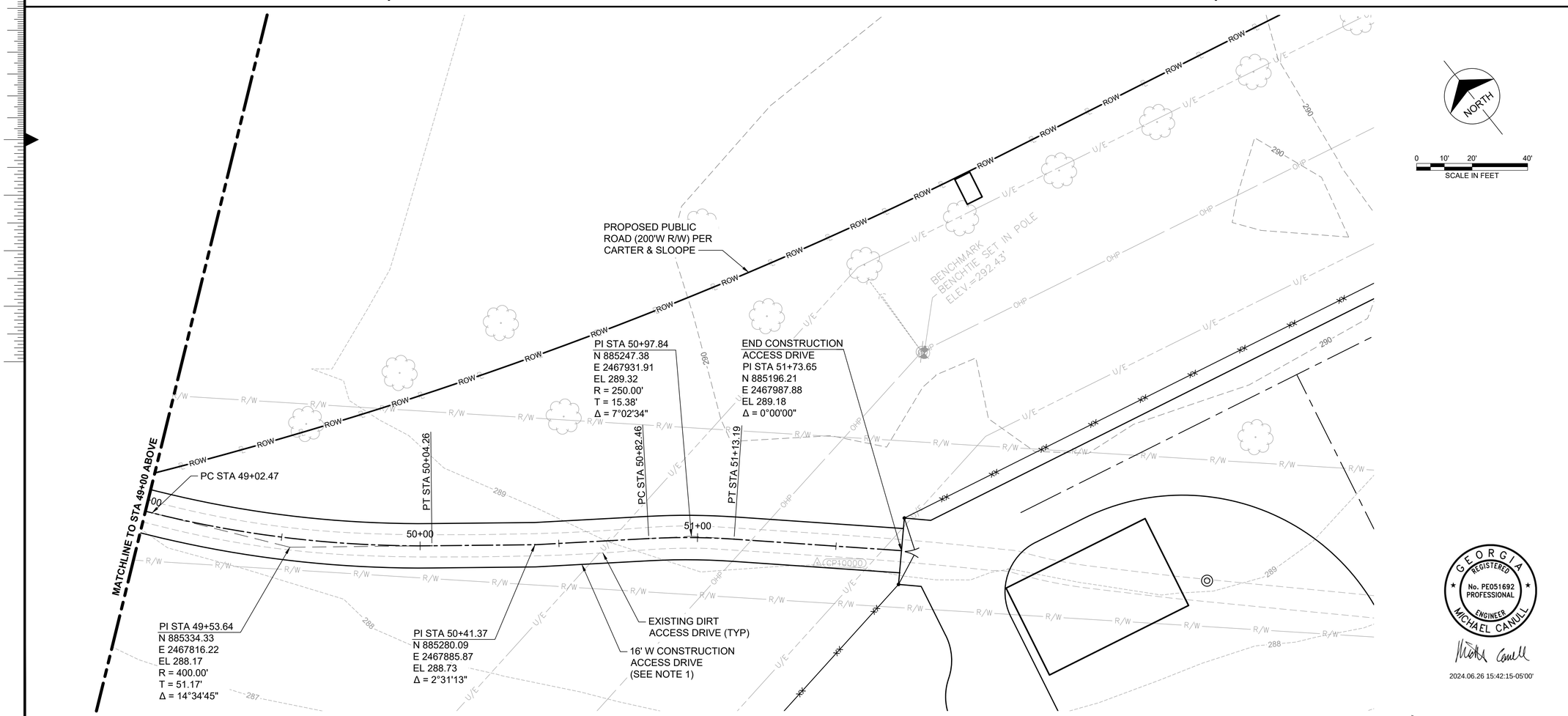

GEORGIA REGISTERED No. PE051692 PROFESSIONAL ENGINEER MICHAEL CANULL

2024.06.26 15:42:15-05'00'

no.	date	by	ckd	description
0	6/26/24	MJC	JLG	ISSUED FOR CONSTRUCTION

BURNS McDONNELL
4004 SUMMIT BLVD. NE, SUITE 1200
ATLANTA, GA 30319
770-587-4776
LICENSEE NO. PEF000100
AUTHORIZATION NO. J550903

date	detailed
MARCH 13, 2023	M. ELENGEBAWY
designed	checked
M. CANULL	J. GARDER

Perry

HOUSTON COUNTY, GEORGIA

EAST PERRY WWTF

CIVIL CONSTRUCTION
ACCESS DRIVE PLAN
SHEET 7

project	contract
148538	

drawing **100C147** — rev. **0**

sheet of sheets

file 148538_ROADWAY PLANS.DWG

Z:\CLIENTS\WTR\PERRYGA\148538_EASTWWTP\DESIGN\CADD\CIVIL\PROD_DWGS\148538_ROADWAY PLANS.DWG 6/20/2024 8:14 AM MTOOLEN

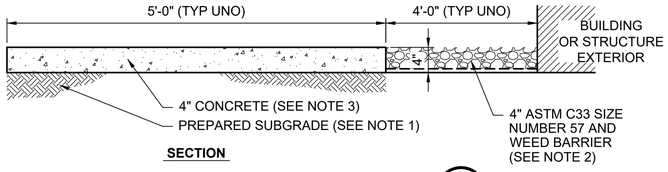

SECTION

TYPICAL SIDEWALK DETAIL (1)
NOT TO SCALE

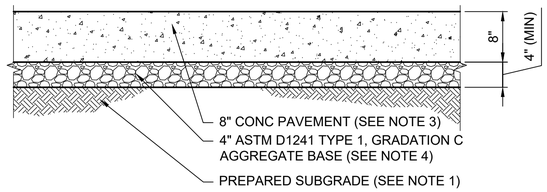

TYPICAL CONCRETE DRIVE DETAIL (2)
NOT TO SCALE

DETAIL 1 AND 2 NOTES:

1. SUBGRADE SHALL BE PREPARED IN ACCORDANCE WITH SPEC SECTION 312050. IF ENCOUNTERED, LOOSE SANDS OR FAT CLAYS SHALL BE OVER-EXCAVATED 24-INCHES BELOW THE PAVEMENT AND REPLACED WITH 24-INCHES OF TYPE 1, GRADATION C IN ACCORDANCE WITH ASTM D1241 STANDARD SPECIFICATION FOR MATERIALS FOR SOIL-AGGREGATE SUBBASE, BASE, AND SURFACE COURSES.

2. AGGREGATE BASE SHALL BE SIZE NUMBER 57 IN ACCORDANCE WITH ASTM C33 STANDARD SPECIFICATION FOR CONCRETE AGGREGATES. AGGREGATE BASE SHALL BE COMPACTED IN ACCORDANCE WITH THE REQUIREMENTS OF SPEC SECTION 321123. WHERE INDICATED PER DETAIL, INSTALL WEED BARRIER PRIOR TO PLACING AGGREGATE.

3. CONCRETE SHALL BE IN ACCORDANCE WITH THE REQUIREMENTS OF SPEC SECTION 033000 AND 321600.

4. AGGREGATE BASE SHALL BE TYPE 1, GRADATION C IN ACCORDANCE WITH ASTM D1241 STANDARD SPECIFICATION FOR MATERIALS FOR SOIL-AGGREGATE SUBBASE, BASE, AND SURFACE COURSES.

5. INSTALL 18" SMOOTH DOWEL, 1 1/4" DIAMETER ON 12" CENTERS ON ALL TRANSVERSE JOINTS.

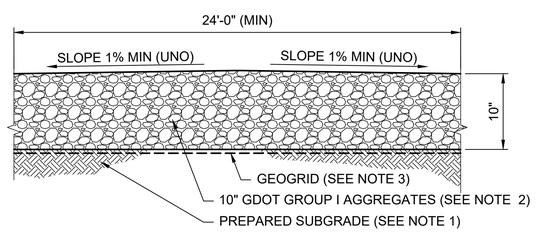

AGGREGATE DRIVE DETAIL (3)
NOT TO SCALE

DETAIL 3 NOTES:

1. SUBGRADE SHALL BE PREPARED IN ACCORDANCE WITH SPEC SECTION 312050. IF ENCOUNTERED, LOOSE SANDS OR FAT CLAYS SHALL BE OVER-EXCAVATED 24-INCHES BELOW AGGREGATE DRIVE AND REPLACED WITH 24-INCHES TYPE 1, GRADATION C IN ACCORDANCE WITH ASTM D1241 STANDARD SPECIFICATION FOR SOIL-AGGREGATE SUBBASE, BASE, AND SURFACE COURSES.

2. AGGREGATE BASE SHALL BE GROUP 1 AGGREGATES IN ACCORDANCE WITH SECTION 815.2 OF THE GEORGIA DEPARTMENT OF TRANSPORTATION STANDARD SPECIFICATIONS CONSTRUCTION OF TRANSPORTATION SYSTEMS. AGGREGATE BASE SHALL BE COMPACTED IN ACCORDANCE WITH THE REQUIREMENTS OF SPEC SECTION 321123.

3. TENSAR TRIAX TX130S GEOGRID OR ENGINEER APPROVED EQUAL. INSTALL IN ACCORDANCE WITH MANUFACTURER'S RECOMMENDATIONS.

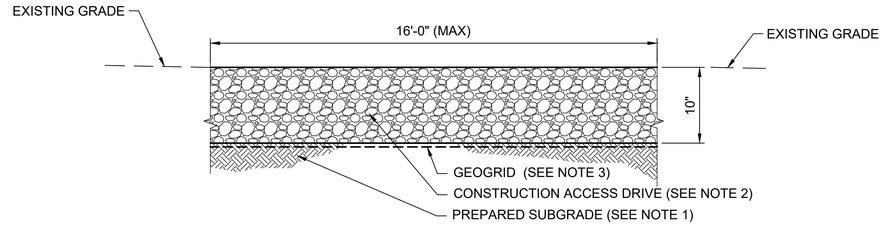

CONSTRUCTION ACCESS DRIVE DETAIL (4)
NOT TO SCALE

DETAIL 4 NOTES:

1. SUBGRADE SHALL BE PREPARED IN ACCORDANCE WITH THE SPECIFICATION SECTION 312050.

2. AGGREGATE BASE SHALL BE SIZE NUMBER 3 IN ACCORDANCE WITH ASTM C33 STANDARD SPECIFICATION FOR CONCRETE AGGREGATES. AGGREGATE SHALL BE COMPACTED IN ACCORDANCE WITH THE REQUIREMENTS OF SPECIFICATION SECTION 321123.

3. TENSAR TRIAX TX130S GEOGRID OR ENGINEER APPROVED EQUAL. INSTALL IN ACCORDANCE WITH MANUFACTURER'S RECOMMENDATIONS.

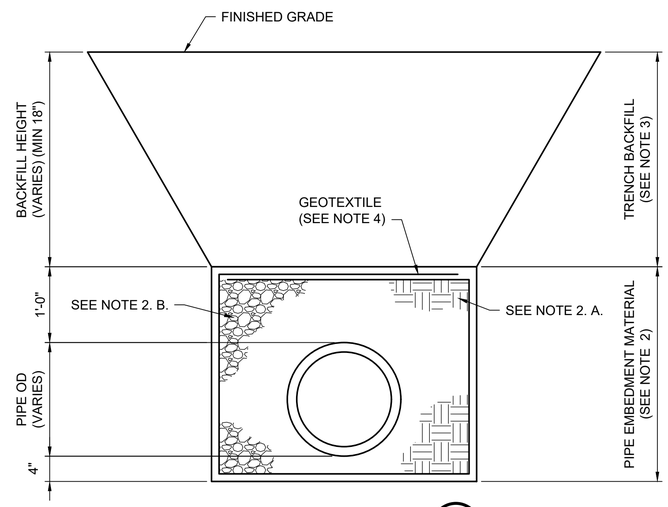

TYPICAL TRENCH DETAIL (5)
NOT TO SCALE

DETAIL 5 NOTES:

1. BELOW A PLANE 12-INCHES ABOVE THE TOP OF PIPE, THE MINIMUM AND MAXIMUM TRENCH WIDTHS SHALL BE IN ACCORDANCE WITH SPEC SECTION 312050.

2. PIPE EMBEDMENT SHALL BE IN ACCORDANCE WITH THE REQUIREMENTS OF SPEC SECTION 312050.

   A. FOR DIP, PVC C900, PVC SCH 40, PVC SCH 80, POLYETHYLENE (PE), OR RCP, PIPE EMBEDMENT MATERIAL SHALL BE SUITABLE FILL MATERIAL. FOR DIP OR PVC C900 PIPE IN AREAS UNDER AGGREGATE DRIVES OR CONCRETE DRIVES, OR ANY PIPE TYPE WITHIN THE LIMITS OF THE FLOODPLAIN, USE 2.B. PIPE EMBEDMENT.

   B. FOR PVC SDR 35 OR PVC 46 PSI, PIPE EMBEDMENT MATERIAL SHALL BE ASTM C33, SIZE NUMBER 57.

3. SLOPE OR BENCH AS REQUIRED PROVIDED WORK LIMITS ARE NOT EXCEEDED. TRENCH BACKFILL SHALL BE IN ACCORDANCE WITH THE REQUIREMENTS OF SPEC SECTION 312050. TRENCH BACKFILL SHALL BE GRANULAR MATERIAL (TYPE 1, GRADATION C IN ACCORDANCE WITH ASTM D1241 STANDARD SPECIFICATION FOR SOIL-AGGREGATE SUBBASE, BASE, AND SURFACE COURSES) BENEATH PAVEMENT AND SUITABLE FILL MATERIAL AT OTHER LOCATIONS. TRENCH BACKFILL SHALL NOT BE CLEAN ROCK, SAND, OR OTHER PERMEABLE MATERIAL.

4. FOR ANY PIPE TYPE WITHIN THE LIMITS OF THE FLOODPLAIN, THE 2.B. GRANULAR PIPE EMBEDMENT MATERIAL SHALL BE FULLY ENCAPSULATED WITH GEOTEXTILE FABRIC, MIRAFI 140N OR ENGINEER APPROVED EQUAL. OVERLAP GEOTEXTILE A MINIMUM OF THE PIPE TRENCH WIDTH IN ANY DIRECTION.

GEORGIA REGISTERED No. PE051692 PROFESSIONAL ENGINEER MICHAEL CANULL

2024.06.26 15:42:16-05'00'

no.	date	by	ckd	description
0	6/26/24	MJC	JLG	ISSUED FOR CONSTRUCTION

BURNS McDONNELL
4004 SUMMIT BLVD. NE, SUITE 1200
ATLANTA, GA 30319
770-587-4776
LICENSEE NO. PEF000100
AUTHORIZATION NO. J550903

date	detailed
MARCH 13, 2023	M. ELENGEBAWY
designed	checked
M. CANULL	J. GARDER

Perry
HOUSTON COUNTY, GEORGIA

EAST PERRY WWTF

CIVIL DETAIL SHEET 1

project 148538 | contract

drawing **100C501** | rev. **0**

sheet of sheets

file 148538C500_CIVIL DETAILS.DWG

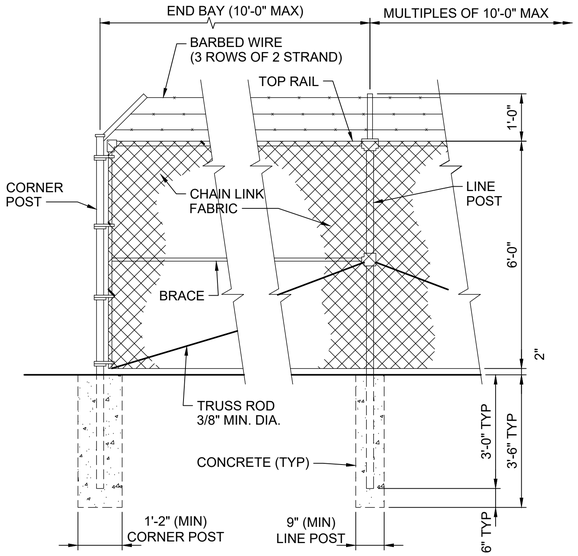

TYPICAL CHAIN-LINK FENCE DETAIL 6
NOT TO SCALE

DETAIL 6 NOTES:

1. CONCRETE SHALL BE IN ACCORDANCE WITH THE REQUIREMENTS OF SPEC SECTION 033000.
2. FENCE AND GATE MATERIALS AND INSTALLATION SHALL BE AS INDICATED AND AS SPECIFIED IN SECTION 323113.

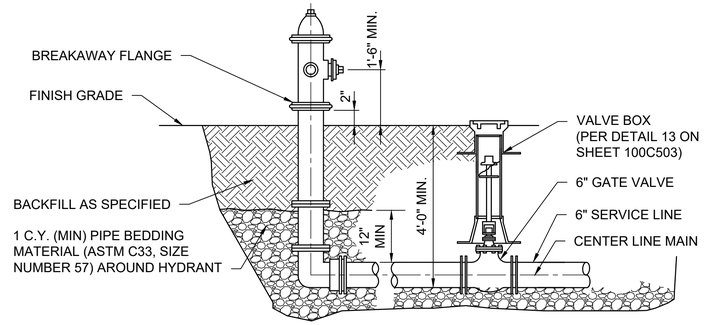

FIRE HYDRANT DETAIL 7
NOT TO SCALE

DETAIL 7 NOTES

1. ACCEPTABLE MODEL/MANUFACTURER:
   A. CENTURIAN MODEL A423 BY MUELLER
   B. M&H MODEL MVO 129 3-WAY
   C. AMERICAN-DARLING MODEL B-84-B-5
   D. ENGINEER APPROVED EQUAL.
2. FIRE HYDRANTS SHALL CONFORM TO AWWA C502, STANDARD FOR DRY-BARREL FIRE HYDRANTS.
3. FIRE HYDRANT SHALL HAVE A NOMINAL 5-1/4 INCH MAIN VALVE WITH 6-INCH MECHANICAL JOINT INLET CONNECTION.
4. OUTLET NOZZLES SHALL BE NATIONAL (AMERICAN) FIRE HOSE COUPLING SCREW THREADS AND BE AS FOLLOWS:
   A. TWO - 2-1/2 INCH HOSE NOZZLES.
   B. ONE - 4-1/2 INCH PUMPER NOZZLE.
5. MAIN VALVE SHALL BE EQUIPPED WITH "O"-RING SEALS AND SHALL OPEN TO THE LEFT (COUNTERCLOCKWISE).
6. FIRE HYDRANT SHALL BE OF THE BREAK-FLANGE SAFETY-TOP TYPE.
7. MJ RETAINER GLANDS AT EACH END.

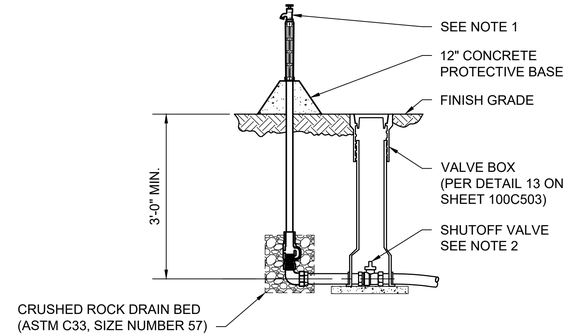

YARD HYDRANT DETAIL 8
NOT TO SCALE

DETAIL 8 NOTES:

1. YARD HYDRANTS SHALL BE ZURN Z1385 POST HYDRANT OR CONTRACTOR APPROVED EQUAL. INLET SHALL BE A 1-INCH CONNECTION.
2. SHUT OFF VALVE SHALL BE 1" RESILIENT WEDGE NRS GATE VALVES WITH FLANGED ENDS OR ENGINEER APPROVED EQUAL.

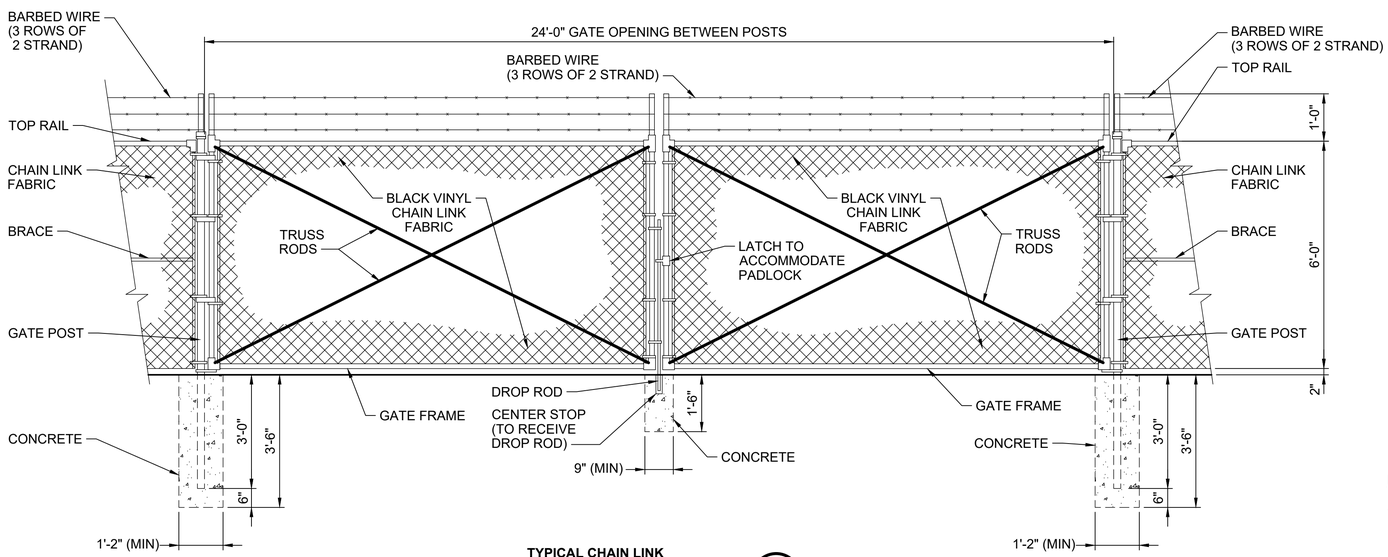

TYPICAL CHAIN LINK GATE DETAIL 9
NOT TO SCALE

DETAIL 9 NOTES:

1. CONCRETE SHALL BE IN ACCORDANCE WITH THE REQUIREMENTS OF SPEC SECTION 033000.
2. FENCE AND GATE MATERIALS AND INSTALLATION SHALL BE AS INDICATED AND AS SPECIFIED IN SECTION 323113.

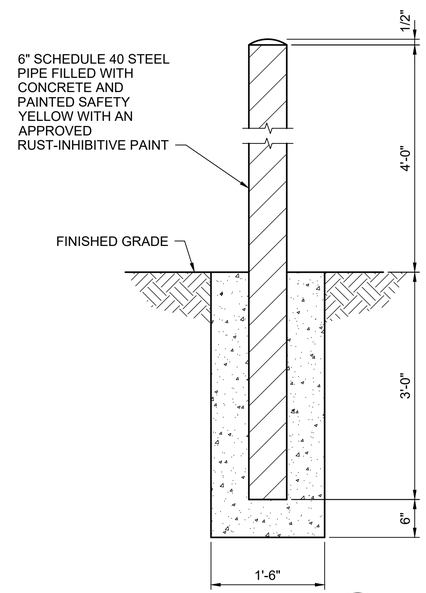

BOLLARD DETAIL 10
NOT TO SCALE

DETAIL 10 NOTES:

1. BOLLARD DETAIL SHALL ONLY BE USED FOR BOLLARDS LOCATED IN SOIL AREAS. FOR ALL OTHER BOLLARDS LOCATED IN CONCRETE PAVEMENT NEAR BUILDINGS AND STRUCTURES, REFERENCE THE TYPICAL TOP MOUNTED BOLLARD DETAIL ON STRUCTURAL STANDARD DETAIL.
2. CONCRETE SHALL BE IN ACCORDANCE WITH THE REQUIREMENTS OF SPEC SECTION 033000.

GEORGIA REGISTERED No. PE051692 PROFESSIONAL ENGINEER MICHAEL CANULL

2024.06.26 15:42:16-05'00'

no.	date	by	ckd	description
0	6/26/24	MJC	JLG	ISSUED FOR CONSTRUCTION

BURNS McDONNELL
4004 SUMMIT BLVD. NE, SUITE 1200
ATLANTA, GA 30319
770-587-4776
LICENSEE NO. PEF000100
AUTHORIZATION NO. J550903

date	detailed
MARCH 13, 2023	M. ELENGEBAWY
designed	checked
M. CANULL	J. GARDER

Perry
HOUSTON COUNTY, GEORGIA

EAST PERRY WWTF

CIVIL DETAIL SHEET 2

project 148538 | contract

drawing **100C502** – rev. **0**

sheet of sheets

file 148538C500_CIVIL DETAILS.DWG

Z:\CLIENTS\WTR\PERRYGA\148538_EASTWWTP\DESIGN\CADD\CIVIL\PROD_DWGS\148538C500_CIVIL DETAILS.DWG 6/20/2024 10:51 AM MTOOLEN

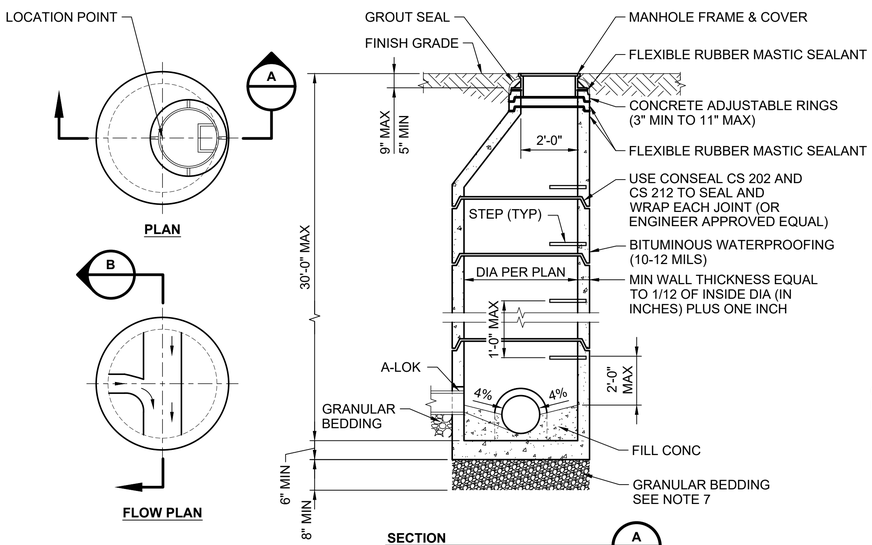

SECTION A
NOT TO SCALE

PRECAST MANHOLE DETAIL 11
NOT TO SCALE

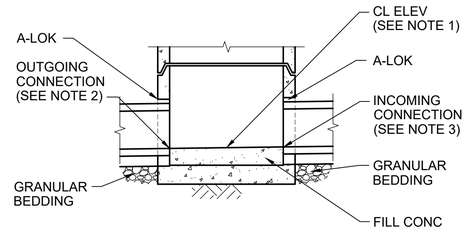

SECTION B
NOT TO SCALE

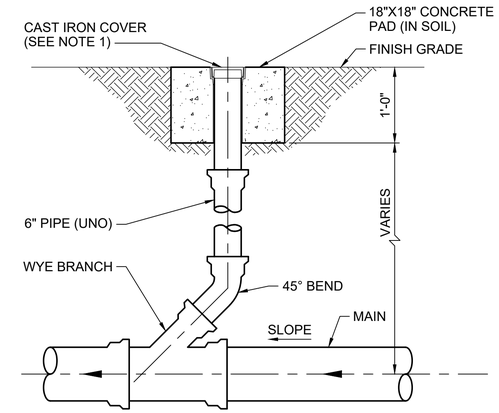

CLEANOUT DETAIL 12
NOT TO SCALE

DETAIL 12 NOTES:

1. SET TOP OF CLEANOUT AT GRADE IN PAVEMENT. SET TOP OF CLEANOUT 1" ABOVE GRADE IN EARTH.
2. CLEANOUT COVER SHALL BE HEAVY DUTY RATED.

DETAIL 11 NOTES:

1. CENTERLINE ELEVATION SHALL BE AS INDICATED ON PLANS.
2. OUTGOING CONNECTION SHALL BE 0.04' LOWER THAN THE CENTERLINE ELEVATION.
3. INCOMING CONNECTION(S) SHALL BE A MINIMUM OF 0.04' HIGHER THAN THE CENTERLINE ELEVATION.
4. MANHOLE SHALL BE IN ACCORDANCE WITH SPEC SECTION 333113.
5. FILL CONCRETE SHALL BE IN ACCORDANCE WITH THE REQUIREMENTS OF SPEC SECTION 033000.
6. FOR MANHOLE FRAME AND COVERS, NEENAH R-1712 OR ENGINEER-APPROVED EQUAL SHALL BE INSTALLED IN ALL AREAS, EXCEPT FOR MH-1. MH-1 FRAME AND COVER SHALL BE NEENAH R-2427-A OR ENGINEER-APPROVED EQUAL.
7. AGGREGATE BASE SHALL BE NUMBER 57 IN ACCORDANCE WITH ASTM C33 STANDARD SPECIFICATION FOR CONCRETE AGGREGATES.

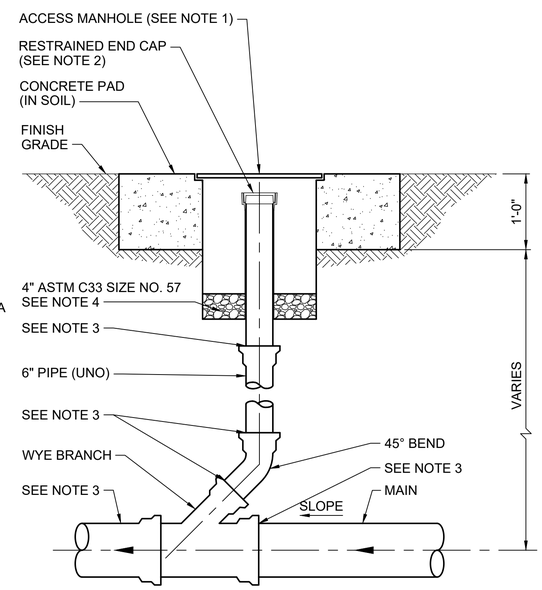

PRESSURE PIPE (SSFM)
CLEANOUT DETAIL 14
NOT TO SCALE

DETAIL 14 NOTES:

1. SET TOP OF CLEANOUT AT GRADE IN PAVEMENT. SET TOP OF CLEANOUT 1" ABOVE GRADE IN EARTH. ACCESS MANHOLE SHALL BE H-20 RATED, MANHOLE COVERS DIRECT LAY IN COVER MODEL R-20X18-STN OR ENGINEER APPROVED EQUAL.
2. RESTRAINED END CAP SHALL BE ROMAC INDUSTRIES, INC. 6" STANDARD ALPHA END CAP OR ENGINEER APPROVED EQUAL.
3. 6" CLEANOUT PIPE SHALL BE DUCTILE IRON PIPE OR PVC PIPE WITH RESTRAINED MECHANICAL OR RESTRAINED PUSH ON JOINTS IN ACCORDANCE WITH SPEC SECTION 331100.
4. AGGREGATE BASE SHALL BE SIZE NUMBER 57 IN ACCORDANCE WITH ASTM C33 STANDARD SPECIFICATION FOR CONCRETE AGGREGATES.

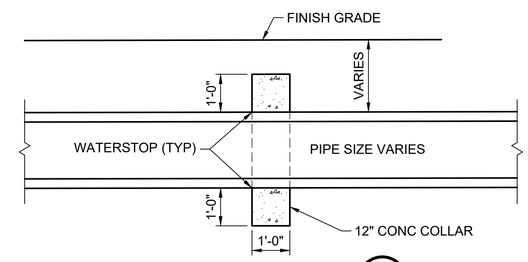

TRENCH PLUG/COLLAR DETAIL 15
NOT TO SCALE

DETAIL 15 NOTES:

1. 12" CONCRETE COLLAR SHALL BE INSTALLED AT THE DETENTION BASIN OUTLET PIPE IN AT LEAST TWO (2) LOCATIONS UNDER THE BERM BETWEEN THE OUTLET CONTROL STRUCTURE AND THE FLARED END SECTION. CONCRETE SHALL BE IN ACCORDANCE WITH THE REQUIREMENTS OF SPEC SECTION 033000.

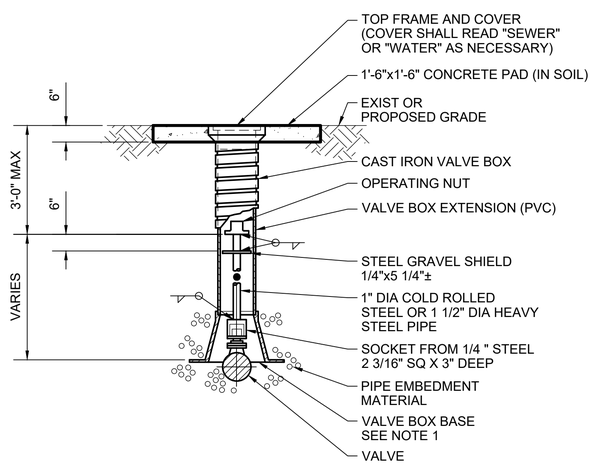

SCREW -TYPE VALVE BOX DETAIL 13
NOT TO SCALE

DETAIL 13 NOTES:

1. BASE SHALL BE INSTALLED ON COMPACTED BACKFILL AT A MINIMUM OF 4" ABOVE VALVE FLANGE OR OPERATOR BODY.

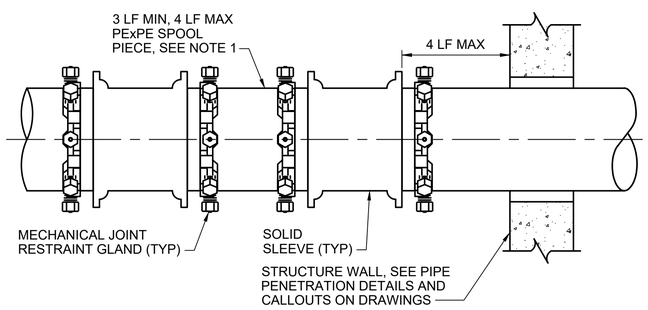

FLEXIBLE COUPLING DETAIL 16
NOT TO SCALE

DETAIL 16 NOTES:

1. JOINT LOCATIONS FOR CONNECTIONS TO NEW STRUCTURES SHALL BE IN ACCORDANCE WITH THE REQUIREMENTS OF SPECIFICATION SECTION 33 11 00.
2. SPOOL PIECE MATERIAL SHALL MATCH PIPE MATERIAL OF THE EXTERIOR YARD PIPING.

GEORGIA REGISTERED No. PE051692 PROFESSIONAL ENGINEER MICHAEL CANULL

2024.06.26 15:42:16-05'00'

no.	date	by	ckd	description
0	6/26/24	MJC	JLG	ISSUED FOR CONSTRUCTION

BURNS McDONNELL
4004 SUMMIT BLVD. NE, SUITE 1200
ATLANTA, GA 30319
770-587-4776
LICENSEE NO. PEF000100
AUTHORIZATION NO. J550903

date	detailed
MARCH 13, 2023	M. ELENGEBAWY
designed	checked
M. CANULL	J. GARDER

Perry
HOUSTON COUNTY, GEORGIA

EAST PERRY WWTF

CIVIL DETAIL SHEET 3

project 148538 | contract

drawing **100C503** – rev. **0**

sheet of sheets

file 148538C500_CIVIL DETAILS.DWG

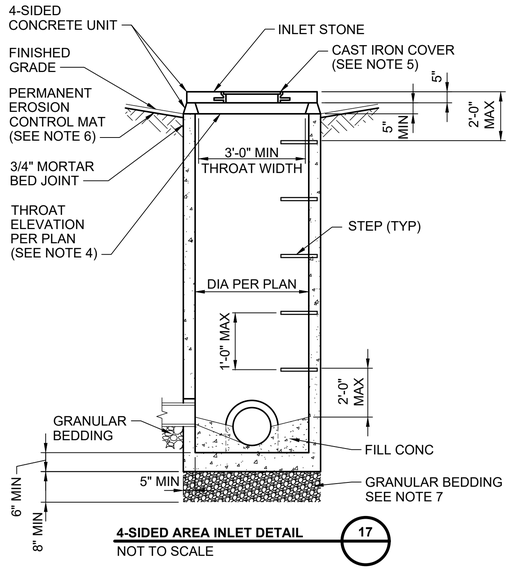

4-SIDED AREA INLET DETAIL 17
NOT TO SCALE

DETAIL 17 NOTES:

1. CENTERLINE ELEVATION SHALL BE AS INDICATED ON PLANS.
2. OUTGOING CONNECTION SHALL BE 0.04' LOWER THAN THE CENTERLINE ELEVATION.
3. INCOMING CONNECTION SHALL BE A MINIMUM OF 0.04' HIGHER THAN THE CENTERLINE ELEVATION.
4. THROAT ELEVATION SHALL BE AS INDICATED ON PLANS. THROAT WIDTH SHALL BE A MINIMUM OF 3'-0". AREA INLET SHALL HAVE FOUR (4) OPEN SIDES TO RECEIVE OVERLAND FLOW.
5. CAST IRON COVER (LID) SHALL BE 2'-0" DIAMETER NEENAH R-1775 OR ENGINEER APPROVED EQUAL.
6. PROVIDE A MINIMUM OF 3 LINEAR FEET OF PERMANENT EROSION CONTROL MAT ON ALL FOUR (4) SIDES OF AREA INLETS TO MINIMIZE EROSION. PERMANENT EROSION CONTROL MAT SHALL CONFORM TO SPEC SECTION 312050.
7. AGGREGATE BASE SHALL BE NUMBER 57 IN ACCORDANCE WITH ASTM C33 STANDARD SPECIFICATION FOR CONCRETE AGGREGATES.

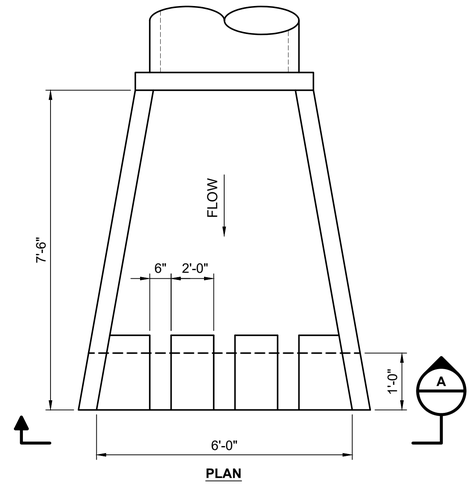

PLAN

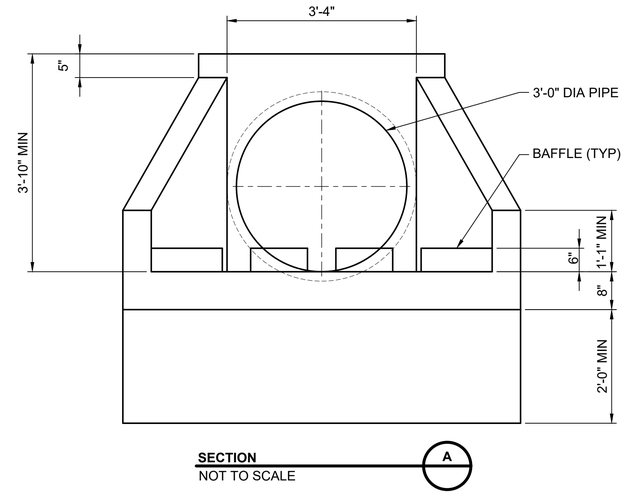

SECTION A
NOT TO SCALE

HEADWALL DETAIL FOR OUTLET PIPE IN DETENTION BASIN 18
NOT TO SCALE

DETAIL 18 NOTES:

1. FLOW LINE ELEVATIONS SHALL BE AS INDICATED ON PLANS.
2. CONCRETE SHALL BE IN ACCORDANCE WITH THE REQUIREMENTS OF SPEC SECTION 033000.
3. FOR MORE DETAILS, REFERENCE STATE OF GEORGIA DEPARTMENT OF TRANSPORTATION, STANDARD TAPERED INLET HEADWALL - OUTLET HEADWALL (BUILT-IN-PLACE) DETAIL NUMBER 1125.

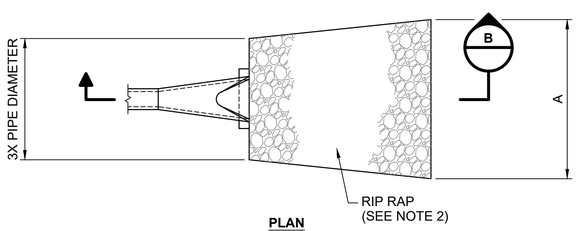

PLAN

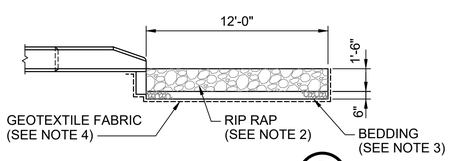

SECTION B
NOT TO SCALE

OUTLET PROTECTION DETAIL 19
NOT TO SCALE

OUTLET PIPE DIA	A
21"	13'
24"	14'
36"	15'

DETAIL 19 NOTES:

1. PROVIDE OUTLET PROTECTION FOR ALL FLARED END SECTIONS AND OUTLET PIPE IN DETENTION BASIN. OUTLET PROTECTION MATERIAL (RIPRAP, BEDDING, AND FILTER FABRIC MATERIAL) SHALL BE IN ACCORDANCE WITH SPECIFICATION SECTION 312050.
2. RIPRAP MATERIAL SHALL BE TYPE 3 PER SECTION 805.2.A OF THE GEORGIA DEPARTMENT OF TRANSPORTATION STANDARD SPECIFICATIONS CONSTRUCTION OF TRANSPORTATION SYSTEMS.
3. BEDDING MATERIAL SHALL BE SIZE NUMBER 2 IN ACCORDANCE WITH ASTM C33 STANDARD SPECIFICATION FOR CONCRETE AGGREGATES.
4. FILTER FABRIC INSTALLED BELOW HEAVY STONE REVETMENT SHALL BE TENCATE MIFAFI 180N AND SHALL BE IN ACCORDANCE WITH SECTION 881.2.05 OF THE GEORGIA DEPARTMENT OF TRANSPORTATION STANDARD SPECIFICATIONS CONSTRUCTION OF TRANSPORTATION SYSTEMS.

GEORGIA REGISTERED No. PE051692 PROFESSIONAL ENGINEER MICHAEL CANULL

2024.06.26 15:42:17-05'00'

no.	date	by	ckd	description
0	6/26/24	MJC	JLG	ISSUED FOR CONSTRUCTION

BURNS McDONNELL
4004 SUMMIT BLVD. NE, SUITE 1200
ATLANTA, GA 30319
770-587-4776
LICENSEE NO. PEF000100
AUTHORIZATION NO. J550903

date	detailed
MARCH 13, 2023	M. ELENGEBAWY
designed	checked
M. CANULL	J. GARDER

Perry
HOUSTON COUNTY, GEORGIA

EAST PERRY WWTF

CIVIL DETAIL SHEET 4

project 148538 | contract

drawing **100C504** – rev. **0**

sheet of sheets

file 148538C500_CIVIL DETAILS.DWG

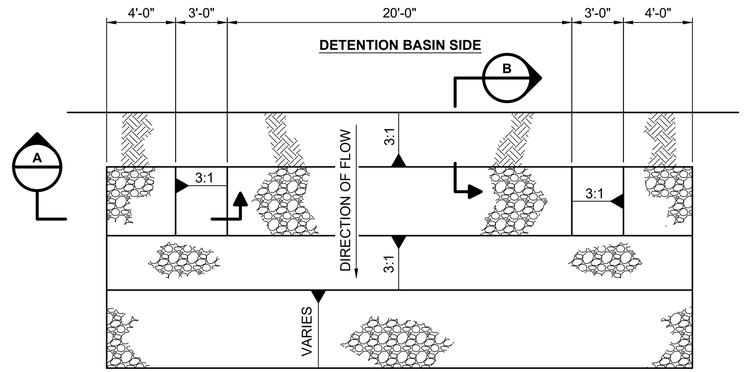

PLAN

OVERFLOW WEIR DETAIL (20)
NOT TO SCALE

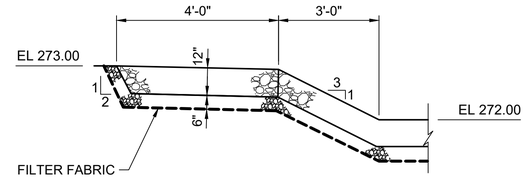

SECTION (A)
NOT TO SCALE

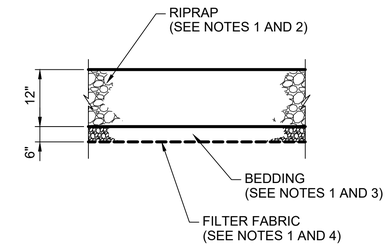

SECTION (C)
NOT TO SCALE

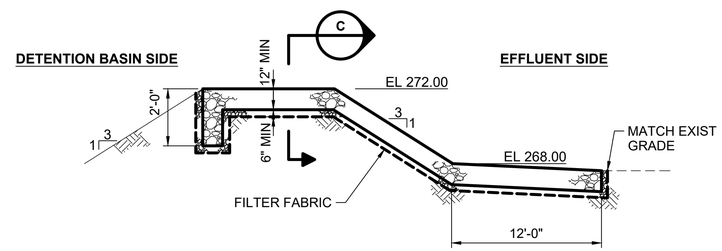

SECTION (B)
NOT TO SCALE

DETAIL 20 NOTES:

1. OVERFLOW MATERIAL (RIPRAP, BEDDING, AND FILTER FABRIC MATERIAL) SHALL BE IN ACCORDANCE WITH SPECIFICATION SECTION 312050.
2. RIPRAP MATERIAL SHALL BE TYPE 3 PER SECTION 805.2.A OF THE GEORGIA DEPARTMENT OF TRANSPORTATION STANDARD SPECIFICATIONS CONSTRUCTION OF TRANSPORTATION SYSTEMS.
3. BEDDING MATERIAL SHALL BE SIZE NUMBER 2 IN ACCORDANCE WITH ASTM C33 STANDARD SPECIFICATION FOR CONCRETE AGGREGATES.
4. FILTER FABRIC INSTALLED BELOW BEDDING MATERIAL SHALL BE TENCATE MIRAFI 180N AND SHALL BE IN ACCORDANCE WITH SECTION 881.2.05 OF THE GEORGIA DEPARTMENT OF TRANSPORTATION STANDARD SPECIFICATIONS CONSTRUCTION OF TRANSPORTATION SYSTEMS.

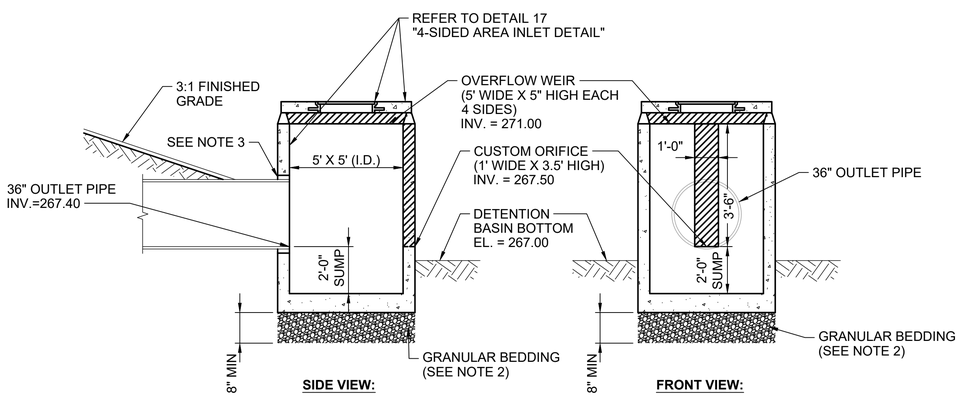

OUTLET CONTROL STRUCTURE DETAIL (21)
NOT TO SCALE

DETAIL 21 NOTES:

1. FOR OUTLET CONTROL STRUCTURE DETAILS REFER TO DETAIL 17 "4-SIDED AREA INLET DETAIL."
2. AGGREGATE BASE SHALL BE NUMBER 57 IN ACCORDANCE WITH ASTM C33 STANDARD SPECIFICATION FOR CONCRETE AGGREGATES.
3. PROVIDE AN APPROVED EXPOSED, WATERTIGHT CONNECTION FOR OUTLET PIPE.

GEORGIA REGISTERED No. PE051692 PROFESSIONAL ENGINEER MICHAEL CANULL

2024.06.26 15:42:17-05'00'

no.	date	by	ckd	description
0	6/26/24	MJC	JLG	ISSUED FOR CONSTRUCTION

BURNS McDONNELL
4004 SUMMIT BLVD. NE, SUITE 1200
ATLANTA, GA 30319
770-587-4776
LICENSEE NO. PEF000100
AUTHORIZATION NO. J550903

date	detailed
MARCH 13, 2023	M. ELENGEBAWY
designed	checked
M. CANULL	J. GARDER

Perry
HOUSTON COUNTY, GEORGIA

EAST PERRY WWTF

CIVIL DETAIL SHEET 5

project 148538 | contract

drawing **100C505** – rev. **0**

sheet of sheets

file 148538C500_CIVIL DETAILS.DWG

PROJECT INFORMATION & DATA

1. PROJECT NAME: PERRY WWTP PROJECT
2. THE PROJECT IS LOCATED WITHIN HOUSTON COUNTY, GA.
3. THE PROJECT WILL INVOLVE THE INSTALLATION OF 1.46 AC OF IMPERVIOUS AREAS. CONSTRUCTION WILL INVOLVE LAND GRADING, PIPE INSTALLATION, CONSTRUCTION OF BUILDINGS AND WASTE WATER TREATMENT PLANT, EROSION AND SEDIMENT CONTROL MEASURES, ROAD INSTALLATION, BACKFILLING ONLY AND NEW STORMWATER INFRASTRUCTURE IS TO BE BUILT ON THE SITE. DURING CONSTRUCTION, ALL STORMWATER IS TO BE ROUTED TO A SEDIMENT BASIN WITH APPROPRIATE BMPS INSTALLED IN ORDER MAINTAIN ACCEPTABLE NEPHELOMETRIC TURBIDITY UNIT (NTU) LEVELS.
4. TOTAL DISTURBED AREA: 15.37 ACRES
5. TOTAL SITE AREA: 32.5 ± ACRES
6. EXISTING CONDITIONS: MOST OF THE PROJECT AREA IS LOCATED ON AN EXISTING PECAN FARM WITH BOTH FIELDS AND WOODED AREAS. SITE SOILS GENERALLY DRAIN AWAY FROM THE ROADWAY AND PROJECT SITE INTO BIG INDIAN CREEK.
7. CONSTRUCTION ENTRANCE COORDINATES:
   LAT: 32.437296° N
   LONG: 83.626218° W
8. PREDOMINANT SOIL TYPES: ALLUVIAL LAND, WET, LUCY SAND, ORANGEBURG LOAMY FINE SAND, LOCAL ALLUVIAL LAND.
9. STORMWATER MANAGEMENT CONSIDERATIONS: STORMWATER DETENTION BASIN TO BE INSTALLED, OUTLET PROTECTION TO BE USED AT TREATED EFFLUENT OUTLET.
10. THE RECEIVING WATERS IS BIG INDIAN CREEK.
11. WETLANDS AND STATE WATERS ARE WITHIN 200' OF THIS SITE BUT NO LAND DISTURBANCE IS ANTICIPATED WITHIN ANY BUFFER LIMITS. WETLANDS DEPICTED ARE BASED AN APPROVED, FORMAL U.S. ARMY CORP OF ENGINEERS WETLAND DELINEATION CONDUCTED BY BURNS & MCDONNELL.
12. DISPOSAL OF DEBRIS: ALL DEBRIS SHALL BE HAULED OFFSITE TO A STATE APPROVED LANDFILL.
13. BMPS FOR THE WASHOUT OF CONCRETE TOOLS, HOPPERS AND DRUMS ARE PROVIDED AT THE CONSTRUCTION ENTRANCE.
14. INSTALLATION STATEMENT: THE INSTALLATION OF EROSION CONTROL MEASURES AND PRACTICES SHALL OCCUR PRIOR TO OR CONCURRENT WITH LAND DISTURBING ACTIVITIES.
15. NONE OF THE SITE LIES WITHIN FEMA FLOOD ZONES.

LIMIT OF DISTURBANCE SHALL BE NO GREATER THAN 50 ACRES FOR EACH INDIVIDUAL PERMITTEE (I.E. PRIMARY, SECONDARY OR TERTIARY) AT ANY ONE TIME AND NO MORE THAN 50 CONTIGUOUS ACRES AT ONE TIME WITHOUT PRIOR WRITTEN AUTHORIZATION FROM THE EPD DISTRICT OFFICE. IF EPD APPROVES THE REQUEST TO DISTURB 50 ACRES OR MORE AT ANY ONE TIME, THE PLAN MUST INCLUDE AT LEAST 4 OF THE BMPS LISTED IN APPENDIX 1 OF THIS CHECKLIST. A COPY OF THE WRITTEN APPROVAL BY EPD MUST BE ATTACHED TO THE PLAN FOR THE PLAN TO BE REVIEWED.

APPLICABLE: _____ NOT APPLICABLE: X

CONSTRUCTION SCHEDULE

MONTH	1	2	3	4	5	6	7	8	9	10	11	12	13	14	15	16	17	18	19	20	21	22	23	24
INSTALL E&SC MEASURES	X	X																						
CLEARING AND GRUBBING			X	X	X																			
TEMPORARY STABILIZATION				X	X	X	X	X	X	X	X													
EXCAVATION ACTIVITIES				X	X	X	X	X	X	X	X	X	X	X										
MAINTENANCE OF ALL BMPs			X	X	X	X	X	X	X	X	X	X	X	X	X	X	X	X	X	X	X	X		
FINAL STABILIZATION																						X	X	X

CONTACT INFORMATION

24-HOUR CONTACT & PRIMARY PERMITTEE	DESIGN PROFESSIONAL
CUSTOMER SERVICE CENTER CITY OF PERRY CHAD.MCMURRIAN@PERRY-GA.GOV (478) 988-2754	PHILLIP REAGIN PREAGIN@BURNSMCD.COM BURNS & MCDONNELL 4004 SUMMIT BLVD SUITE 1200 ATLANTA, GA 30319 (770) 587-4776

I CERTIFY UNDER PENALTY OF LAW THAT THIS PLAN WAS PREPARED AFTER A SITE VISIT TO THE LOCATIONS DESCRIBED HEREIN BY MYSELF OR MY AUTHORIZED AGENT, UNDER MY DIRECT SUPERVISION.

I CERTIFY THAT THE PERMITTEE'S EROSION, SEDIMENTATION AND POLLUTION CONTROL PLAN PROVIDES FOR AN APPROPRIATE AND COMPREHENSIVE SYSTEM OF BEST MANAGEMENT PRACTICES REQUIRED BY THE GEORGIA WATER QUALITY CONTROL ACT AND THE DOCUMENT "MANUAL FOR EROSION AND SEDIMENT CONTROL IN GEORGIA," PUBLISHED BY THE STATE SOIL AND WATER CONSERVATION COMMISSION AS OF JANUARY 1 OF THE YEAR IN WHICH THE LAND-DISTURBING ACTIVITY WAS PERMITTED, PROVIDES FOR THE SAMPLING OF THE RECEIVING WATER(S) OR THE SAMPLING OF THE STORM WATER OUTFALLS AND THAT THE DESIGNED SYSTEM OF BEST MANAGEMENT PRACTICES AND SAMPLING METHODS IS EXPECTED TO MEET THE REQUIREMENTS CONTAINED IN THE GENERAL NPDES PERMIT NO. GAR 100001."

SIGNATURE _____
PHILLIP REAGIN, CERTIFICATION #01170

THE DESIGN PROFESSIONAL WHO PREPARED THE ES&PC PLAN IS TO INSPECT THE INSTALLATION OF THE INITIAL SEDIMENT STORAGE REQUIREMENTS AND PERIMETER CONTROL BMPS WITHIN 7 DAYS AFTER INSTALLATION.

SIGNATURE _____
PHILLIP REAGIN, CERTIFICATION #01170

DATE OF INSPECTION _____

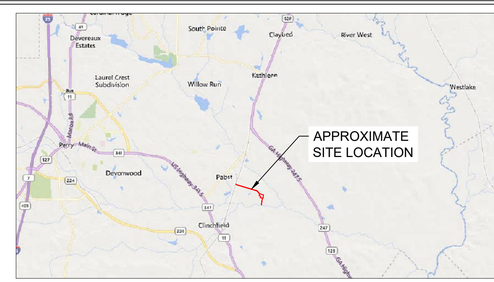

SITE LOCATION
SCALE: NTS

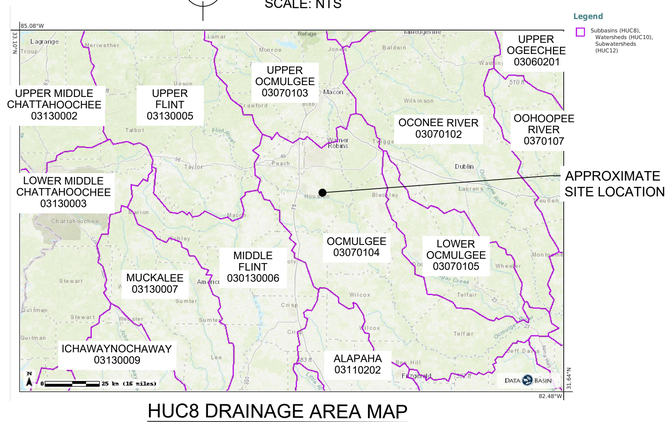

HUC8 DRAINAGE AREA MAP

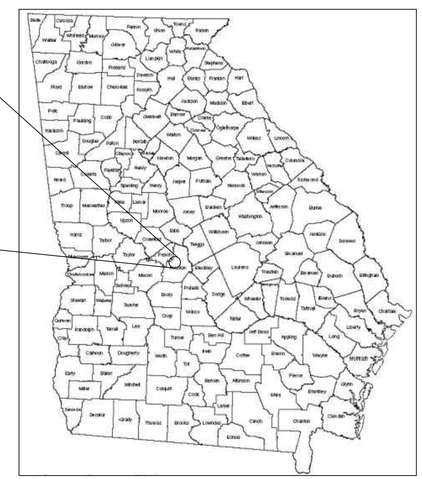

GEORGIA STATE MAP

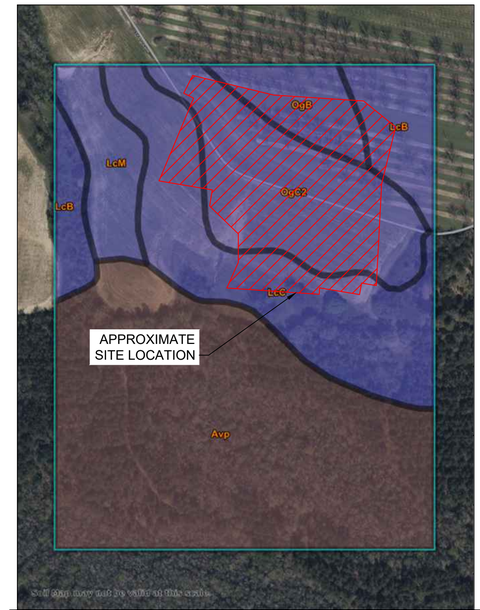

Map unit symbol	Map unit name	Rating	Acres in AOI	Percent of AOI
Avp	Alluvial land, wet	B/D	28.1	45.6%
LcB	Lucy sand, 0 to 5 percent slopes	B	5.2	8.5%
LcC	Lucy sand, 5 to 8 percent slopes	B	12.0	19.5%
LcM	Local alluvial land	B	3.6	5.8%
OgB	Orangeburg loamy fine sand, 2 to 5 percent slopes	B	3.0	4.8%
OgC2	Orangeburg loamy fine sand, 5 to 8 percent slopes, eroded	B	9.7	15.8%
Totals for Area of Interest			**61.6**	**100.0%**

NRCS WEB SOIL SURVEY
SCALE: N.T.S.

CERTIFIED PROFESSIONAL IN EROSION AND SEDIMENT CONTROL
CPESC
Philip Reagin
No. 4707

GSWCC LEVEL II
CERTIFICATION #01170
EXPIRATION DATE: 06-10-2025

no.	date	by	ckd	description
0	6/26/24	NWE	BSS	ISSUED FOR CONSTRUCTION

BURNS McDONNELL
4004 SUMMIT BLVD. NE, SUITE 1200
ATLANTA, GA 30319
770-587-4776
LICENSEE NO. PEF000100
AUTHORIZATION NO. J550903

date	detailed
JUNE 26, 2024	C. RICHEY
designed	checked
N. ELLIS	B. SAKIDOVITCH

Perry
HOUSTON COUNTY, GEORGIA

EAST PERRY WWTF
EROSION & SEDIMENT CONTROL
GENERAL NOTES 1

project 148538 | contract
drawing **100C003** – rev. **0**
sheet 1 of 11 sheets
file 148538C002_ESC GENERAL NOTES 1.DWG

EROSION, SEDIMENTATION & POLLUTION CONTROL PLAN CHECKLIST
STAND ALONE CONSTRUCTION PROJECTS

SWCD: Houston County

Project Name: East Perry Wastewater Treatment Facility **Address:** A.E. Harris Road, Perry, GA 31069

Local Issuing Authority: City of Perry **Date on Plans:** February 5, 2024

Name & Email of person filling out checklist: Brian Sakidovitch, bsakidovitch@burnsmcd.com

TO BE SHOWN ON ES&PC PLAN

Plan Page #	Included Y/N	
2	Y	1 The applicable Erosion, Sedimentation and Pollution Control Plan Checklist established by the Commission as of January 1 of the year in which the land-disturbing activity was permitted. (The completed Checklist must be submitted with the ES&PC Plan or the Plan will not be reviewed)
1-11	Y	2 Level II certification number issued by the Commission, signature and seal of the certified design professional. (Signature, seal and Level II number must be on each sheet pertaining to ES&PC plan or the Plan will not be reviewed)
1	Y	3 Limits of disturbance shall be no greater than 50 acres at any one time without prior written authorization from the GAEPD District Office. If GAEPD approves the request to disturb 50 acres or more at any one time, the Plan must include at least 4 of the BMPs listed in Appendix 1 of this checklist and the GAEPD approval letter. * (A copy of the written approval by GAEPD must be attached to the plan for the Plan to be reviewed.)
1	Y	4 The name and phone number of the 24-hour contact responsible for erosion, sedimentation and pollution controls.
1	Y	5 Provide the name, address, email address, and phone number of primary permittee.
1	Y	6 Note total and disturbed acreages of the project or phase under construction.
1	Y	7 Provide the GPS location of the construction exit for the site. Give the Latitude and Longitude in decimal degrees.
1-11	Y	8 Initial date of the Plan and the dates of any revisions made to the Plan including the entity who requested the revisions.
1-2	Y	9 Description of the nature of construction activity and existing site conditions.
1	Y	10 Provide vicinity map showing site's relation to surrounding areas. Include designation of specific phase, if necessary.
2	Y	11 Identify the project receiving waters and describe all sensitive adjacent areas including streams, lakes, residential areas, wetlands, marshlands, etc. which may be affected.
2	Y	12 Design professional's certification statement and signature that the site was visited prior to development of the ES&PC Plan as stated on **Part IV page 19** of the permit.
1	Y	13 Design professional's certification statement and signature that the permittee's ES&PC Plan provides for an appropriate and comprehensive system of BMPs and sampling to meet permit requirements as stated on **Part IV page 19** of the permit. *
2	Y	14 Clearly note the statement that "The design professional who prepared the ES&PC Plan is to inspect the installation of the initial sediment storage requirements and perimeter control BMPs within 7 days after installation." in accordance with **Part IV.A.5 page 25** of the permit. *
2	Y	15 Clearly note the statement that "Non-exempt activities shall not be conducted within the 25 or 50-foot undisturbed stream buffers as measured from the point of wrested vegetation or within 25-feet of the coastal marshland buffer as measured from the Jurisdictional Determination Line without first acquiring the necessary variances and permits."
N/A	N	16 Provide a description of any buffer encroachments and indicate whether a buffer variance is required.
2	Y	17 Clearly note the statement that "Amendments/revisions to the ES&PC Plan which have a significant effect on BMPs with a hydraulic component must be certified by the design professional." *
2	Y	18 Clearly note the statement that "Waste materials shall not be discharged to waters of the State, except as authorized by a Section 404 permit." *
2	Y	19 Clearly note statement that "The escape of sediment from the site shall be prevented by the installation of erosion and sediment control measures and practices prior to land disturbing activities."
2	Y	20 Clearly note statement that "Erosion control measures will be maintained at all times. If full implementation of the approved Plan does not provide for effective erosion control, additional erosion and sediment control measures shall be implemented to control or treat the sediment source."
2	Y	21 Clearly note the statement "Any disturbed area left exposed for a period greater than 14 days shall be stabilized with mulch or temporary seeding."
N/A	N	22 Any construction activity which discharges storm water into an Impaired Stream Segment, or within 1 linear mile upstream of and within the same watershed as, any portion of a Biota Impaired Stream Segment must comply with Part III. C. of the permit. Include the completed Appendix 1 listing all the BMPs that will be used for those areas of the site which discharge to the Impaired Stream Segment. *
N/A	N	23 If a TMDL Implementation Plan for sediment has been finalized for the Impaired Stream Segment (identified in Item 22 above) at least six months prior to submittal of NOI, the ES&PC Plan must address any site-specific conditions or requirements included in the TMDL Implementation Plan. *
4,6,8	Y	24 BMPs for concrete washdown of tools, concrete mixer chutes, hoppers and the rear of the vehicles. Washout of the drum at the construction site is prohibited. *
3	Y	25 Provide BMPs for the remediation of all petroleum spills and leaks.
1,3	Y	26 Description of the measures that will be installed during the construction process to control pollutants in storm water that will occur after construction operations have been completed. *
3	Y	27 Description of practices to provide cover for building materials and building products on site. *
3	Y	28 Description of the practices that will be used to reduce the pollutants in storm water discharges. *
1	Y	29 Description and chart or timeline of the intended sequence of major activities which disturb soils for the major portions of the site (i.e., initial perimeter and sediment storage BMPs, clearing and grubbing activities, excavation activities, utility activities, temporary and final stabilization).
1	Y	30 Provide complete requirements of Inspections and record keeping by the primary permittee. *
3	N	31 Provide complete requirements of Sampling Frequency and Reporting of sampling results. *
3	Y	32 Provide complete details for Retention of Records as per Part IV.F. of the permit. *
3	N	33 Description of analytical methods to be used to collect and analyze the samples from each location. *
3	N	34 Appendix B rationale for NTU values at all outfall sampling points where applicable. *
2,4-9	Y	35 Delineate all sampling locations, perennial and intermittent streams and other water bodies into which storm water is discharged. *
4-11	Y	36 A description of appropriate controls and measures that will be implemented at the construction site including: (1) initial sediment storage requirements and perimeter control BMPs, (2) intermediate grading and drainage BMPs, and (3) final BMPs. For construction sites where there will be no mass grading and the initial perimeter control BMPs, intermediate grading and drainage BMPs, and final BMPs are the same, the Plan may combine all of the BMPs into a single phase. *
2,4-9	Y	37 Graphic scale and North arrow.
4-9	Y	38 Existing and proposed contour lines with contour lines drawn at an interval in accordance with the following:

Map Scale	Ground Slope	Contour Intervals, ft.
1 inch = 100ft or larger scale	Flat 0 - 2%	0.5 or 1
	Rolling 2 - 8%	1 or 2
	Steep 8% +	2,5 or 10

N/A	N	39 Use of alternative BMPs whose performance has been documented to be equivalent to or superior to conventional BMPs as certified by a Design Professional (unless disapproved by GAEPD or the Georgia Soil and Water Conservation Commission). Please refer to the Alternative BMP Guidance Document found at www.gaswcc.georgia.gov.
N/A	N	40 Use of alternative BMP for application to the Equivalent BMP List. Please refer to Appendix A-2 of the Manual for Erosion & Sediment Control in Georgia 2016 Edition. *
2,4-9	Y	41 Delineation of the applicable 25-foot or 50-foot undisturbed buffers adjacent to state waters and any additional buffers required by the Local Issuing Authority. Clearly note and delineate all areas of impact.
2,4-9	Y	42 Delineation of on-site wetlands and all state waters located on and within 200 feet of the project site.
RP	Y	43 Delineation and acreage of contributing drainage basins on the project site.
RP	Y	44 Provide hydrology study and maps of drainage basins for both the pre- and post-developed conditions. *
RP	Y	45 An estimate of the runoff coefficient or peak discharge flow of the site prior to and after construction activities are completed.
RP	Y	46 Storm-drain pipe and weir velocities with appropriate outlet protection to accommodate discharges without erosion. Identify/Delineate all storm water discharge points.
1	Y	47 Soil series for the project site and their delineation.
4-9	Y	48 The limits of disturbance for each phase of construction.
4-9	Y	49 Provide a minimum of 67 cubic yards of sediment storage per acre drained using a temporary sediment basin, retrofitted detention pond, and/or excavated inlet sediment traps for each common drainage location. Sediment storage volume must be in place prior to and during all land disturbance activities until final stabilization of the site has been achieved. A written justification explaining the decision to use equivalent controls when a sediment basin is not attainable must be included in the Plan for each common drainage location in which a sediment basin is not provided. A written justification as to why 67 cubic yards of storage is not attainable must also be given. Worksheets from the Manual included for structural BMPs and all calculations used by the storage design professional to obtain the required sediment when using equivalent controls. When discharging from sediment basins and impoundments, permittees are required to utilize outlet structures that withdraw water from the surface, unless infeasible. If outlet structures that withdraw water from the surface are not feasible, a written justification explaining this decision must be included in the Plan.
4-9	Y	50 Location of Best Management Practices that are consistent with and no less stringent than the Manual for Erosion and Sediment Control in Georgia. Use uniform coding symbols from the Manual, Chapter 6, with legend.
4-11	Y	51 Provide detailed drawings for all structural practices. Specifications must, at a minimum, meet the guidelines set forth in the Manual for Erosion and Sediment Control in Georgia.
3,8-9	Y	52 Provide vegetative plan, noting all temporary and permanent vegetative practices. Include species, planting dates and seeding, fertilizer, lime and mulching rates. Vegetative plan shall be site specific for appropriate time of the year that seeding will take place and for the appropriate geographic region of Georgia.

* If using this checklist for a project that is less than 1 acre and not part of a common development but within 200 ft of a perennial stream, the * checklist items would be N/A.

Effective January 1, 2024

EROSION AND SEDIMENT CONTROL NOTES:

1. ALL DISTURBED AREAS SHALL HAVE EROSION AND SEDIMENTATION CONTROL MEASURES PROVIDED FOR AND IN ACCORDANCE WITH THE STATE OF GEORGIA SOIL AND WATER COMMISSION (GSWCC) MANUAL FOR EROSION AND SEDIMENT CONTROL IN GEORGIA, 2016 EDITION.
2. NOTATIONS SHOWN ON THE EROSION CONTROL PLAN SHEETS AND ON THE EROSION CONTROL DETAIL SHEETS FOR THE EROSION AND SEDIMENT CONTROL BEST MANAGEMENT PRACTICES, REFERS TO THE GEORGIA UNIFORM CODING SYSTEM AS DETAILED IN THE MANUAL FOR EROSION AND SEDIMENT CONTROL IN GEORGIA, 2016 EDITION.
3. SURFACE WATERS MUST BE BE FILTERED BY AN EFFECTIVE SEDIMENT CONTROL MEASURE PRIOR TO ENTERING RECEIVING WATERS.
4. EROSION AND SEDIMENT CONTROL MEASURES ARE TO BE MAINTAINED AT ALL POINTS WHERE SURFACE WATER FLOW FROM DISTURBED AREAS CAN LEAVE THE SITE. FLOWS ARE TO BE DIRECTED TO CONTROL MEASURES THROUGHOUT CONSTRUCTION ACTIVITIES AND MAINTENANCE OF SWALES, BERMS, TEMPORARY DIKES, AND OTHER ACCEPTED CONSTRUCTION PRACTICES IS REQUIRED.
5. NON-EXEMPT ACTIVITIES SHALL NOT BE CONDUCTED WITHIN THE 25 OR 50-FOOT UNDISTURBED STREAM BUFFERS AS MEASURED FROM THE POINT OF WRESTED VEGETATION OR WITHIN 25-FEET OF THE COASTAL MARSHLAND BUFFER AS MEASURED FROM THE JURISDICTIONAL LINE WITHOUT FIRST ACQUIRING THE NECESSARY VARIANCES AND PERMITS.
6. AMENDMENTS/REVISIONS TO THE EROSION AND SEDIMENTATION CONTROL PLAN WHICH HAVE A SIGNIFICANT IMPACT ON BMPS MUST BE CERTIFIED BY A DESIGN PROFESSIONAL.
7. WASTE MATERIALS SHALL NOT BE DISCHARGED INTO WATERS OF THE STATE, EXCEPT AS AUTHORIZED BY A 404 PERMIT.
8. THE ESCAPE OF SEDIMENT FROM THE SITE SHALL BE PREVENTED BY THE INSTALLATION OF EROSION AND SEDIMENTATION CONTROL MEASURES PRIOR TO ANY LAND DISTURBING ACTIVITY EXCEPT AS REQUIRED TO INSTALL THE INITIAL EROSION AND SEDIMENTATION CONTROLS.
9. ANY DISTURBED AREA LEFT EXPOSED FOR A PERIOD GREATER THAN 14-DAYS SHALL BE STABILIZED WITH MULCH OR TEMPORARY SEEDING.
10. ANY ADDITIONAL EROSION AND SEDIMENT CONTROL MEASURES SHALL BE INSTALLED IF DETERMINED NECESSARY BY ON-SITE INSPECTION AND BE RED LINED ON THIS PLAN IN ACCORDANCE WITH THE MANUAL FOR EROSION AND SEDIMENT CONTROL IN GEORGIA, 2016 EDITION.
11. THE CONTRACTOR SHALL COMPLETELY REMOVE TEMPORARY EROSION AND SEDIMENT CONTROL MEASURES UPON COMPLETION OF CONSTRUCTION ACTIVITIES AND ONCE PERMANENT VEGETATION IS ESTABLISHED.
12. THE CONTRACTOR IS RESPONSIBLE FOR MONITORING DOWNSTREAM CONDITIONS THROUGHOUT THE CONSTRUCTION PERIOD.
13. WHEN HAND PLANTING, MULCH (OR STRAW) SHOULD BE UNIFORMLY SPREAD OVER SEEDED AREA WITHIN 24-HOURS OF SEEDING.
14. DURING UNSTABLE GROWING SEASONS, MULCH WILL BE USED AS TEMPORARY COVER. ON SLOPES 4:1 OR STEEPER, MULCH WILL BE ANCHORED.
15. EROSION CONTROL MEASURES WILL BE MAINTAINED AT ALL TIMES. IF FULL IMPLEMENTATION OF THE APPROVED PLAN DOES NOT PROVIDE FOR EFFECTIVE EROSION CONTROL, ADDITIONAL EROSION AND SEDIMENT CONTROL MEASURES SHALL BE IMPLEMENTED TO CONTROL OR TREAT THE SEDIMENT SOURCE.
16. CONCENTRATED FLOW AREAS, ALL SLOPES 3:1 OR GREATER WITH A HEIGHT OF 10-FEET OR GREATER, AND CUTS OR FILLS ADJACENT TO OR WITHIN STREAM BUFFERS, SHALL BE STABILIZED WITH APPROPRIATE EROSION CONTROL SLOPE STABILIZATION.
17. PROPOSED DETENTION PONDS AND DETENTION OUTLET CONTROL STRUCTURES ARE TO BE CONSTRUCTED AND FULLY OPERATIONAL PRIOR TO, OR CONCURRENT WITH OTHER CONSTRUCTION OR GRADING OPERATIONS.
18. SEDIMENT STORAGE VOLUME MUST BE IN PLACE PRIOR TO AND DURING ALL LAND DISTURBING ACTIVITIES UNTIL FINAL STABILIZATION OF THE SITE HAS BEEN ACHIEVED.
19. AT LEAST ONE PERSON ON THE PROJECT OR SITE MUST HAVE COMPLETED THE LEVEL 1A EROSION EDUCATION AND TRAINING COURSE AND BE CERTIFIED GSWCC.
20. SUBCONTRACTORS MUST COMPLETE EITHER THE LEVEL 1A EROSION EDUCATION AND TRAINING COURSE OR ATTEND SUBCONTRACTOR AWARENESS SEMINAR.

INSPECTION REQUIREMENTS:

1. EACH DAY WHEN CONSTRUCTION ACTIVITY HAS TAKEN PLACE, CERTIFIED PERSONNEL SHALL INSPECT ALL AREAS WHERE PETROLEUM PRODUCTS ARE STORED AND ALL LOCATIONS WHERE VEHICLES ENTER OR EXIT THE SITE FOR EVIDENCE OF OFF-SITE SEDIMENT TRACKING
2. MEASURE AND RECORD RAINFALL WITHIN DISTURBED AREAS OF THE SITE THAT HAVE NOT MET FINAL STABILIZATION ONCE EVERY 24 HOURS EXCEPT ANY NON-WORKING DAY.
3. CERTIFIED PERSONNEL SHALL INSPECT DISTURBED AREAS, STORAGE AREAS EXPOSED TO PRECIPITATION, AND STRUCTURAL CONTROL MEASURES AT LEAST ONCE EVERY 14 CALENDAR DAYS WITHIN 24 HOURS OF A STORM THAT IS 0.5 INCHES OF RAINFALL OR GREATER.
4. CERTIFIED PERSONNEL SHALL INSPECT THE AREAS OF THE SITE THAT HAVE UNDERGONE FINAL STABILIZATION OR ESTABLISHED VEGETATION AT LEAST ONCE PER MONTH.
5. BASED ON THE RESULTS OF EACH INSPECTION, THE SITE DESCRIPTION AND THE POLLUTION PREVENTION AND CONTROL MEASURES IDENTIFIED IN THE EROSION AND SEDIMENTATION CONTROL PLAN, THE PLAN SHALL BE REVISED AS APPROPRIATE NOT LATER THAN SEVEN CALENDAR DAYS FOLLOWING THE INSPECTION.
6. A REPORT ON EACH INSPECTION THAT INCLUDES THE NAME(S) OF CERTIFIED PERSONNEL MAKING EACH INSPECTION, THE DATE(S) OF EACH INSPECTION, CONSTRUCTION PHASE OF THE PERMIT SHALL BE MADE AND RETAINED ON SITE OR BE READILY AVAILABLE AT A DESIGNATED ALTERNATIVE LOCATION.
7. THE DESIGN PROFESSIONAL WHO PREPARED THE ES&PC PLAN IS TO INSPECT THE INSTALLATION OF THE INITIAL SEDIMENT STORAGE REQUIREMENTS AND PERIMETER CONTROL BMPS WITHIN 7 DAYS AFTER INSTALLATION.

APPROXIMATE SITE LOCATION

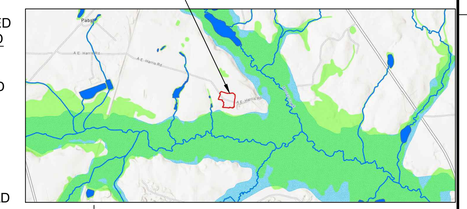

NHD, NWI, FLOOD HAZARD AND TOPOGRAPHIC MAP

SCALE: N.T.S.

CERTIFIED PROFESSIONAL IN EROSION AND SEDIMENT CONTROL
CPESC
Phillip Reagin
No. 4707

GSWCC LEVEL II
CERTIFICATION #01170
EXPIRATION DATE: 06-10-2025

no.	date	by	ckd	description
0	6/26/24	NWE	BSS	ISSUED FOR CONSTRUCTION

ABBREVIATIONS:

RP STORMWATER REPORT

BURNS McDONNELL
4004 SUMMIT BLVD. NE, SUITE 1200
ATLANTA, GA 30319
770-587-4776
LICENSEE NO. PEF000100
AUTHORIZATION NO. J550903

date	detailed
JUNE 26, 2024	C. RICHEY
designed	checked
N. ELLIS	B. SAKIDOVITCH

Perry
HOUSTON COUNTY, GEORGIA

EAST PERRY WWTF
EROSION & SEDIMENT CONTROL
GENERAL NOTES 2

project 148538 | contract

drawing **100C004 –** rev. **0**

sheet 2 of 11 sheets

file 148538C003_ESC GENERAL NOTES 2.DWG

Millimeters
Scale For Microfilming
Inches

SUPPLEMENTAL ES&PC NOTES:

1. FULL COORDINATION SHALL BE MAINTAINED BETWEEN ATLANTA GAS LIGHT (AGL) PROJECT MANAGEMENT, THE CONTRACTOR, PROJECT DESIGN ENGINEER/PROFESSIONAL, AND THE AGL CONSTRUCTION SERVICES SUPERINTENDENT/INSPECTOR, REGARDING PROJECT SCHEDULING AND SEQUENCE.

2. THE CONTRACTOR SHALL MAINTAIN ALL EROSION CONTROL MEASURES UNTIL PERMANENT GROUND COVER IS ESTABLISHED, or until such time that the project limits of disturbance are subject to disturbance by gdot contractors. SEDIMENT SHALL BE CLEANED OUT OF THE EROSION AND SEDIMENT CONTROL MEASURES WHEN IT REACHES THE REQUIRED CLEAN-OUT ELEVATION.

3. ALL ROADWAYS, PARKING SHOULDERS, AND AREAS NOT RECEIVING STONE SURFACING OR IMPERVIOUS SURFACE COVER SHOULD BE GRASSED AS SOON AS FINAL GRADE IS ACHIEVED.

4. POLLUTION CONTROLS:

(a.) CUT AND FILL:

1. OPERATIONS SHALL BE KEPT TO A MINIMUM. PHASE IF POSSIBLE.

2. SHALL NOT ENDANGER ADJOINING PROPERTIES.

3. FILLS SHALL NOT ENCROACH UPON NATURAL WATER COURSES. CHANNELS SHALL NOT BE CONSTRUCTED IN A MANNER SO AS TO ADVERSELY AFFECT OTHER PROPERTY OWNERS.

4. MINIMIZE DAMAGE FROM SURFACE WATER RUNOFF TO THE CUT FACE OF EXCAVATIONS, OR THE SLOPING SURFACES OF FILLS.

(b.) STATE WATER BANKS:

1. ACTIVITIES SHALL NOT BE CONDUCTED WITHIN TWENTY-FIVE (25) FEET OF THE BANKS OF ANY STATE WATERS, AS MEASURED FROM THE POINT WHERE VEGETATION HAS BEEN WRESTED BY NORMAL STREAM FLOW OR WAVE ACTION, EXCEPT WHEN APPROVED BY THE DIRECTOR FOR ALTERNATIVE BUFFER REQUIREMENTS.

2. ACTIVITIES SHALL NOT BE CONDUCTED WITHIN FIFTY (50) HORIZONTAL FEET, AS MEASURED FROM THE POINT WHERE VEGETATION HAS BEEN WRESTED BY NORMAL STREAM FLOW OR WAVE ACTION, OF THE BANKS OF ANY STATE WATERS CLASSIFIED AS "TROUT STREAM" FLOW UNLESS APPROVED BY THE DIRECTOR FOR ALTERNATIVE BUFFER REQUIREMENTS.

(c.) STABILIZATION PRACTICES:

1. VEHICLE AREAS: FILL IN RILL ERODED AREAS WHEN FOUND.

2. TEMPORARY MULCHING: WHEN AN AREA WILL BE LEFT OPEN MORE THAN 14-DAYS WITH NO CONSTRUCTION.

3. SOD STABILIZATION: USED IN HIGHER VELOCITY CHANNEL FLOWS.

4. PERMANENT VEGETATION: THIS IS TO BE ESTABLISHED ONCE FINAL GRADE IS ACHIEVED.

5. SURFACE ROUGHENING: TEXTURING OF SOIL SURFACES TO REDUCE SHEET FLOW AND IMPROVE WATER IMPOUNDMENT.

6. MAINTENANCE OF THE TEMPORARY VEGETATION SHALL MAINTAIN AT LEAST 6 INCHES OF TOP GROWTH IN ACCORDANCE WITH THE GSWCC MANUAL FOR EROSION AND SEDIMENT CONTROL IN GEORGIA, 2016 EDITION.

(d.) GRADING EQUIPMENT:

1. GRADING EQUIPMENT SHALL CROSS FLOWING STREAMS BY THE MEANS OF BRIDGES OR CULVERTS, EXCEPT WHEN SUCH METHODS ARE NOT FEASIBLE, PROVIDED IN ANY CASE THAT SUCH CROSSING SHOULD BE KEPT TO A MINIMUM.

5. MATERIALS AND SAFETY

NOTE: THIS SECTION IS PROVIDED FOR INFORMATIONAL PURPOSES ONLY. ALL MATERIAL SAFETY AND SPILL PREVENTION CONTROL CONTINGENCY (SPCC) PLANS ARE TO BE IN ACCORDANCE WITH POLICIES AND PROCEDURES ALREADY IN PLACE.

(a.) SIGNIFICANT MATERIALS EXPECTED AT SITE INVENTORY: LIME, CONCRETE MIX, STEEL REINFORCING BARS AND RELATED MATERIALS - LUMBER, DIESEL FUEL, LUBRICATING OILS, REINFORCED CONCRETE PIPE, DUCTILE IRON PIPE, STEEL PIPE, PAINTS, FERTILIZERS

(b.) SPILL PREVENTION AND RESPONSE PROCEDURES INCLUDES "GOOD HOUSEKEEPING" AS WELL AS SPECIFIC PRACTICES FOR CERTAIN PRODUCTS AND ESTABLISHED PROCEDURES FOR RESPONDING TO SPILLS WHICH DO OCCUR.

(c.) PRACTICES FOR PRODUCTS - "GOOD HOUSEKEEPING":

1. MATERIALS - AN EFFORT WILL BE MADE TO STORE ONLY ENOUGH MATERIAL REQUIRED TO DO THE JOB.

2. STORAGE - ALL MATERIALS STORED ON-SITE WILL BE STORED IN A NEAT, ORDERLY MANNER IN THEIR APPROPRIATE CONTAINERS AND STORED IN A COVERED AREA. IF STORAGE IN A COVERED AREA IS NOT POSSIBLE THE MATERIALS WILL BE COVERED WITH POLYETHYLENE OR POLYPROPYLENE SHEETING TO PROTECT THEM FROM THE ELEMENTS.

3. MIXING - SUBSTANCES WILL NOT BE MIXED WITH ONE ANOTHER UNLESS RECOMMENDED BY THE MANUFACTURER.

4. LABELING - PRODUCTS WILL BE KEPT IN THEIR ORIGINAL CONTAINERS WITH THE ORIGINAL MANUFACTURER'S LABEL AFFIXED TO EACH CONTAINER.

5. DISPOSAL - WHENEVER POSSIBLE, ALL OF A PRODUCT WILL BE USED BEFORE DISPOSING OF THE CONTAINER. MANUFACTURER RECOMMENDATIONS FOR PROPER USE AND DISPOSAL WILL BE FOLLOWED.

6. INSPECTIONS - THE SITE SUPERINTENDENT WILL INSPECT THE SITE REGULARLY TO ENSURE PROPER USE AND DISPOSAL OF MATERIALS ON-SITE.

7. SPOIL MATERIALS - ANY EXCAVATED EARTH THAT WILL NOT BE USED FOR FILL MATERIAL AND ALL DEMOLISHED PAVEMENT WILL BE HAULED OFF SITE IMMEDIATELY AND DISPOSED OF PROPERLY.

REPORTING:

(A.) SAMPLING RESULTS ARE REQUIRED TO BE SUBMITTED BY THE FIFTEENTH DAY OF THE MONTH FOLLOWING THE REPORTING PERIOD.

RETENTION OF RECORDS:

(A.) RECORDS SHALL BE RETAINED AT THE CONSTRUCTION SITE OR SHALL BE READILY AVAILABLE AT A DESIGNATED ALTERNATE LOCATION.

[Ds2] - DISTURBED AREA STABILIZATION (WITH TEMPORARY SEEDING)

GSWCC: TABLE 6-4.1 - TEMPORARY COVER OR COMPANION COVER CROPS

(PLANT, PLANTING RATE, AND PLANTING DATE FOR TEMPORARY COVER OR COMPANION CROPS 1/)

SPECIES	BROADCAST RATES: Rate Per Acre 2/	BROADCAST RATES: Pure Live Seed (PLS) Per 1,000 sq.ft.	RESOURCE AREA 3/	PLANTING DATES BY RESOURCE AREAS (Solid lines indicate optimum dates. Dotted lines indicate permissible, but marginal dates.) J F M A M J J A S O N D	REMARKS
BARLEY (Hordeum vulgare)			M-L P C	J F M A M J J A S O N D	14,000 seed per pound. Winter hardy. Use on productive soils.
alone	3 bu. (144 lbs.)	3.3 lbs.			
in mixtures	1/2 bu. (24 lbs.)	0.6 lbs.			
LESPEDEZA, ANNUAL (Lespedeza striata)			M-L P C	J F M A M J J A S O N D	200,000 seed per pound. May volunteer for several years. Use inoculant EL.
alone	40 lbs.	0.9 lbs.			
in mixtures	10 lbs.	0.2 lbs.			
LOVEGRASS, WEEPING (Eragrostis curvula)			M-L P C	J F M A M J J A S O N D	1,500,000 seed per pound. May last for several years. Mix with Sericea Lespedeza.
alone	4 lbs.	0.1 lbs.			
in mixtures	2 lbs.	0.05 lbs.			
MILLET, BROWNTOP (Panicum fasciculatum)			M-L P C	J F M A M J J A S O N D	137,000 seed per pound. Quick dense cover. Will provide excessive competition in mixtures if seeded at high rates.
alone	40 lbs.	0.9 lbs.			
in mixtures	10 lbs.	0.2 lbs.			
MILLET, PEARL (Pennesetum glaucum)			M-L P C	J F M A M J J A S O N D	88,000 seed per pound. Quick dense cover. May reach 5 feet in height. Not recommended for mixtures.
alone	50 lbs.	1.1 lbs.			
OATS (Avena sativa)				J F M A M J J A S O N D	13,000 seed per pound. Use on productive soils. Not as a winter hardy as rye or barley.
alone	4 bu. (128 lbs.)	2.9 lbs.			
in mixtures	1 bu. (32 lbs.)	0.7 lbs.			
RYE (Secale cereale)			M-L P C	J F M A M J J A S O N D	18,000 seed per pound. Quick cover. Drought tolerant and winter hardy.
alone	3 bu. (168 lbs.)	3.9 lbs.			
in mixtures	1/2 bu. (28 lbs.)	0.6 lbs.			
RYEGRASS, ANNUAL (Lolium temulentum)			M-L P C	J F M A M J J A S O N D	227,000 seed per pound. Dense cover. Very competitive and is not to be used in mixtures.
alone	40 lbs.	0.9 lbs.			
SUDANGRASS (Sorghum Sudanese)			M-L P C	J F M A M J J A S O N D	55,000 seed per pound. Good on droughty sites. Not recommended for mixtures.
alone	60 lbs.	1.4 lbs.			
TRITICALE (X-Triticosecale)			C	J F M A M J J A S O N D	Use on lower part of Southern Coastal Plain and in Atlantic Coastal Flatwoods only.
alone	3 bu. (144 lbs.)	3.3 lbs.			
in mixtures	1/2 bu. (24 lbs.)	0.6 lbs.			
WHEAT (Triticum aestivum)			M-L P C	J F M A M J J A S O N D	15,000 seeds per pound. Winter hardy.
alone	3 bu. (180 lbs.)	4.1 lbs.			
in mixtures	1/2 bu. (30 lbs.)	0.7 lbs.			

TEMPORARY SEEDING (Ds2) NOTES:

1/ Temporary cover crops are very competitive and will crowd out perennials if seeded too heavily.
2/ Reduce seeding rates by 50% when drilled.
3/ M-L represents the Mountain; Blue Ridge; and Ridges and Valleys MLRAs.
P represents the Southern Piedmont MLRA.
C represents the Southern Coastal Plain; Sand Hills; Black Lands; and Atlantic Coast Flatwoods MLRAs.
(See Table 6-4.1 of the GSWCC Manual For Erosion and Sediment Control In Georgia, 2016 Edition.)

SAMPLING REQUIREMENTS:

NO STREAMS OR OUTFALLS ARE LOCATED WITHIN THE PROJECT LIMITS AND STORMWATER FROM THE SITE WILL BE ROUTED THROUGH THE DESIGNED CONVEYANCE SYSTEM AND DISCHARGED THROUGH AN EFFLUENT PIPE. A SAMPLE SHALL BE TAKEN DOWNSTREAM OF THIS EFFLUENT POINT. SAMPLING POINTS ARE ALSO DESIGNATED UPSTREAM AND DOWNSTREAM OF THE ACCESS ROAD AND STREAM CROSSING. SAMPLING REQUIREMENTS FOR PROVIDED SAMPLING POINTS AND ADDITIONAL SAMPLING REQUIRED DURING THE COURSE OF THE PROJECT SHALL BE PERFORMED IN ACCORDANCE WITH APPENDIX B AND WILL INCLUDE THE FOLLOWING:

(A.) SAMPLING REQUIREMENTS SHALL INCLUDE THE FOLLOWING:

1. A USGS TOPOGRAPHIC MAP SHOWING THE LOCATION OF THE INFRASTRUCTURE CONSTRUCTION AS WELL AS THE LOCATION OF ALL PERENNIAL AND INTERMITTENT STREAMS AND OTHER WATER BODIES.

2. A WRITTEN NARRATIVE OF SITE SPECIFIC ANALYTICAL METHODS USED TO COLLECT AND ANALYZE THE SAMPLES INCLUDING QUALITY CONTROL/QUALITY ASSURANCE PROCEDURES. THIS NARRATIVE MUST INCLUDE PRECISE SAMPLING METHODOLOGY FOR EACH SAMPLING LOCATION;

3. WHEN THE PERMITTEE HAS DETERMINED THAT SOME OR ALL OUTFALLS WILL BE SAMPLED, A RATIONALE MUST BE INCLUDED ON THE PLAN FOR THE NTU LIMIT(S) SELECTED.

(B.) SAMPLE TYPE

1. ALL SAMPLING SHALL BE COLLECTED BY "GRAB SAMPLES" AND THE ANALYSIS OF THESE SAMPLES MUST BE CONDUCTED IN ACCORDANCE WITH METHODOLOGY AND TEST PROCEDURES ESTABLISHED BY 40 CFR PART 136 (UNLESS OTHER TEST PROCEDURES HAVE BEEN APPROVED), THE GUIDANCE DOCUMENT TITLED "NPDES STORM WATER SAMPLING GUIDANCE DOCUMENT, EPA 833-B-92-001" AND GUIDANCE DOCUMENTS THAT MAY BE PREPARED BY THE EPD.

(C.) SAMPLE POINTS

1. FOR CONSTRUCTION ACTIVITIES THE PRIMARY PERMITTEE MUST SAMPLE ALL PERENNIAL AND INTERMITTENT STREAMS AND OTHER WATER BODIES SHOWN ON THE USGS TOPOGRAPHIC MAP AND ALL OTHER FIELD VERIFIED PERENNIAL AND INTERMITTENT STREAMS AND OTHER WATER BODIES, OR ALL OUTFALLS INTO SUCH STREAMS AND OTHER WATER BODIES, OR A COMBINATION THEREOF.

(D.) SAMPLE FREQUENCY

1. THE PRIMARY PERMITTEE MUST SAMPLE IN ACCORDANCE WITH THE PLAN AT LEAST ONCE FOR EACH RAINFALL EVENT DESCRIBED BELOW. FOR A QUALIFYING EVENT, THE PERMITTEE SHALL SAMPLE AT THE BEGINNING OF ANY STORMWATER DISCHARGE TO A MONITORED RECEIVING WATER AND/OR FROM A MONITORED OUTFALL LOCATION WITHIN FORTY-FIVE (45) MINUTES OR AS SOON AS POSSIBLE.

2. HOWEVER, WHERE MANUAL AND AUTOMATIC SAMPLING ARE IMPOSSIBLE (AS DEFINED IN THIS PERMIT), OR ARE BEYOND THE PERMITTEE'S CONTROL, THE PERMITTEE SHALL TAKE SAMPLES AS SOON AS POSSIBLE, BUT IN NO CASE MORE THAN TWELVE (12) HOURS AFTER THE BEGINNING OF THE STORMWATER DISCHARGE.

GSWCC: TABLE 6-5.1. - FERTILIZER REQUIREMENTS

TYPE OF SPECIES	YEAR	ANALYSIS OR EQUIVALENT N-P-K	RATE	N TOP DRESSING RATE
1. Cool Season grasses.	First Second Maintenance	6-12-12 6-12-12 10-10-10	1,500 lbs./ac. 1,000 lbs./ac. 400 lbs./ac.	50-100 lbs./ac. 1/2/ --- 30 lbs./ac.
2. Cool Season grasses and legumes.	First Second Maintenance	6-12-12 0-10-10 0-10-10	1,500 lbs./ac. 1,000 lbs./ac. 400 lbs./ac.	0-50 lbs./ac. 1/ --- ---
3. Ground Covers.	First Second Maintenance	10-10-10 10-10-10 10-10-10	1,300 lbs./ac. 3/ 1,300 lbs./ac. 3/ 1,100 lbs./ac.	--- --- ---
4. Pine Seedlings.	First	20-10-5	one 21-gram pellet per seedling placed in the closing hole	---
5. Shrub Lespedeza.	First	0-10-10	700 lbs./ac.	---
	Maintenance	0-10-10	700 lbs./ac. 4/	---
6. Temporary cover crops seeded alone.	First	10-10-10	500 lbs./ac.	30 lbs./ac. 5/
7. Warm season grasses.	First Second Maintenance	6-12-12 6-12-12 10-10-10	1,500 lbs./ac. 800 lbs./ac. 400 lbs./ac.	50-100 lbs./ac. 2/6/ 50-100 lbs./ac. 2/ 30 lbs./ac.
8. Warm season grasses and legumes.	First Second Maintenance	6-12-12 0-10-10 0-10-10	1,500 lbs./ac. 1,000 lbs./ac. 400 lbs./ac.	50 lbs./ac. 6/

FERTILIZER REQUIREMENTS NOTES:

1/ Apply in spring following seeding.
2/ Apply in split applications when high rates are used.
3/ Apply in 3 split applications.
4/ Apply when plants are pruned.
5/ Apply to grass species only.
6/ Apply when plants grow to a height of 2 to 4 inches.

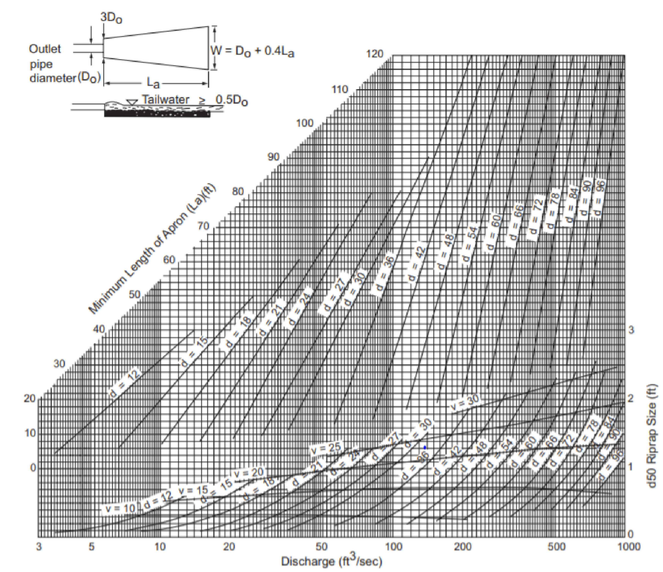

Nephelometric Turbidity Unit (NTU) TABLES

Trout Streams

		Surface Water Drainage Area, square miles							
		0-4.99	5-9.99	10-24.99	25-49.99	50-99.99	100-249.99	250-499.99	500+
Site Size, acres	1.00-10	25	50	75	150	300	500	500	500
	10.01-25	25	25	50	75	150	200	500	500
	25.01-50	25	25	25	50	75	100	300	500
	50.01-100	20	25	25	35	59	75	150	300
	100.01+	20	20	25	25	25	50	60	100

Waters Supporting Warm Water Fisheries

		Surface Water Drainage Area, square miles							
		0-4.99	5-9.99	10-24.99	25-49.99	50-99.99	100-249.99	250-499.99	500+
Site Size, acres	1.00-10	75	150	200	400	750	750	750	750
	10.01-25	50	100	100	200	300	500	750	750
	25.01-50	50	50	100	100	200	300	750	750
	50.01-100	50	50	50	100	100	150	300	600
	100.01+	50	50	50	50	50	100	200	100

CERTIFIED PROFESSIONAL IN EROSION AND SEDIMENT CONTROL
CPESC
Phillip Reagin
No. 4707

GSWCC LEVEL II
CERTIFICATION #01170
EXPIRATION DATE: 06-10-2025

no.	date	by	ckd	description
0	6/24/24	CGR	BSS	ISSUED FOR CONSTRUCTION

BURNS McDONNELL
4004 SUMMIT BLVD. NE, SUITE 1200
ATLANTA, GA 30319
770-587-4776
LICENSEE NO. PEF000100
AUTHORIZATION NO. J550903

date: JUNE 26, 2024
detailed: C. RICHEY
designed: C. RICHEY
checked: B. SAKIDOVITCH

Perry
HOUSTON COUNTY, GEORGIA

EAST PERRY WWTF
EROSION & SEDIMENT CONTROL
GENERAL NOTES 3

project: 148538
contract:
drawing: 100C005 –
rev. 0
sheet 3 of 11 sheets
file 148538C004_ESC GENERAL NOTES 3.DWG

no.	date	by	ckd	description
0	6/26/24	NWE	BSS	ISSUED FOR CONSTRUCTION

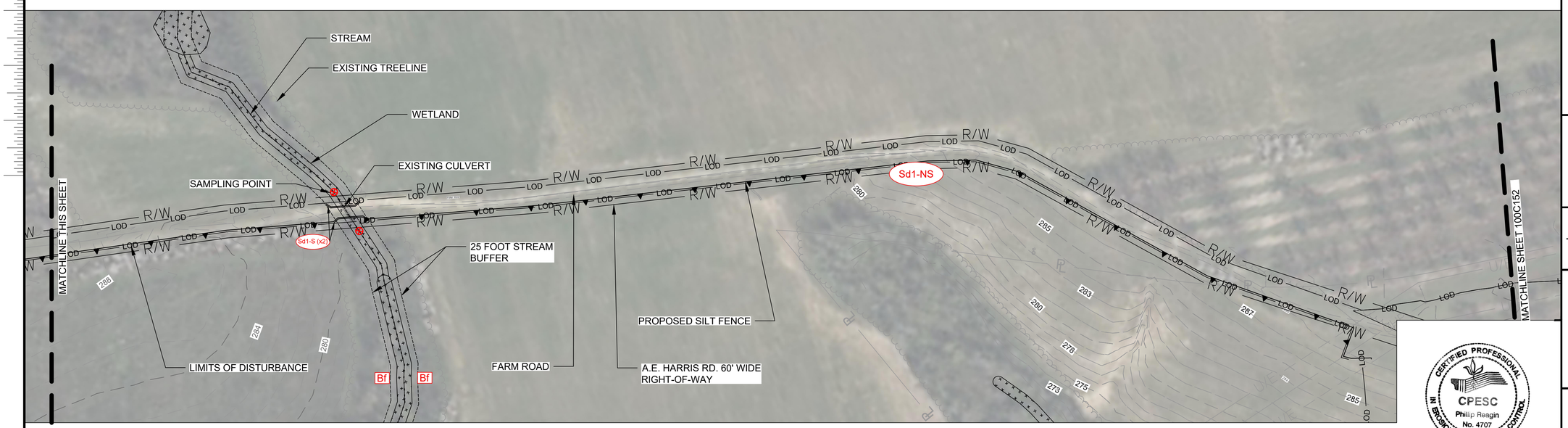

EROSION CONTROL LEGEND:

- Bf — STREAM BUFFER
- Co — CONSTRUCTION EXIT
- Dc — DIVERSION
- Sd1-S (x2) — SILT FENCE (SENSITIVE, DOUBLE ROW AS NEEDED)
- Sd1-NS — SILT FENCE (NON-SENSITIVE, AS NEEDED)
- Sd3 — TEMPORARY SEDIMENT BASIN
- Ss — SLOPE STABILIZATION
- St — OUTLET PROTECTION
- Su — SURFACE ROUGHENING
- Ds3 — PERMANENT SEEDING
- 300 — EXISTING MAJOR CONTOUR
- 299 — EXISTING MINOR CONTOUR
- R/W — A.E. HARRIS RD. RIGHT-OF-WAY
- EXISTING ROADWAY
- LOD — LIMITS OF DISTURBANCE
- EXISTING TREELINE
- GRAVEL ACCESS ROAD
- STREAMLINE
- WETLAND AREA
- SAMPLING POINT

NORTH

0 100 200
1IN = 100FT

BURNS McDONNELL
4004 SUMMIT BLVD. NE, SUITE 1200
ATLANTA, GA 30319
770-587-4776
LICENSEE NO. PEF000100
AUTHORIZATION NO. J550903

date	detailed
JUNE 26, 2024	C. RICHEY
designed	checked
N. ELLIS	B. SAKIDOVITCH

Perry
HOUSTON COUNTY, GEORGIA

CERTIFIED PROFESSIONAL IN EROSION AND SEDIMENT CONTROL
CPESC
Philip Reagin
No. 4707

GSWCC LEVEL II
CERTIFICATION #01170
EXPIRATION DATE: 06-10-2025

EAST PERRY WWTF
EROSION AND SEDIMENT CONTROL
INITIAL PHASE 1

project	contract
148538	

drawing **100C152** – rev. **0**

sheet 4 of 11 sheets

file 148538C150_ESC PLAN_INIT.DWG

Scale For Microfilming
Millimeters
Inches

no.	date	by	ckd	description
0	6/26/24	NWE	BSS	ISSUED FOR CONSTRUCTION

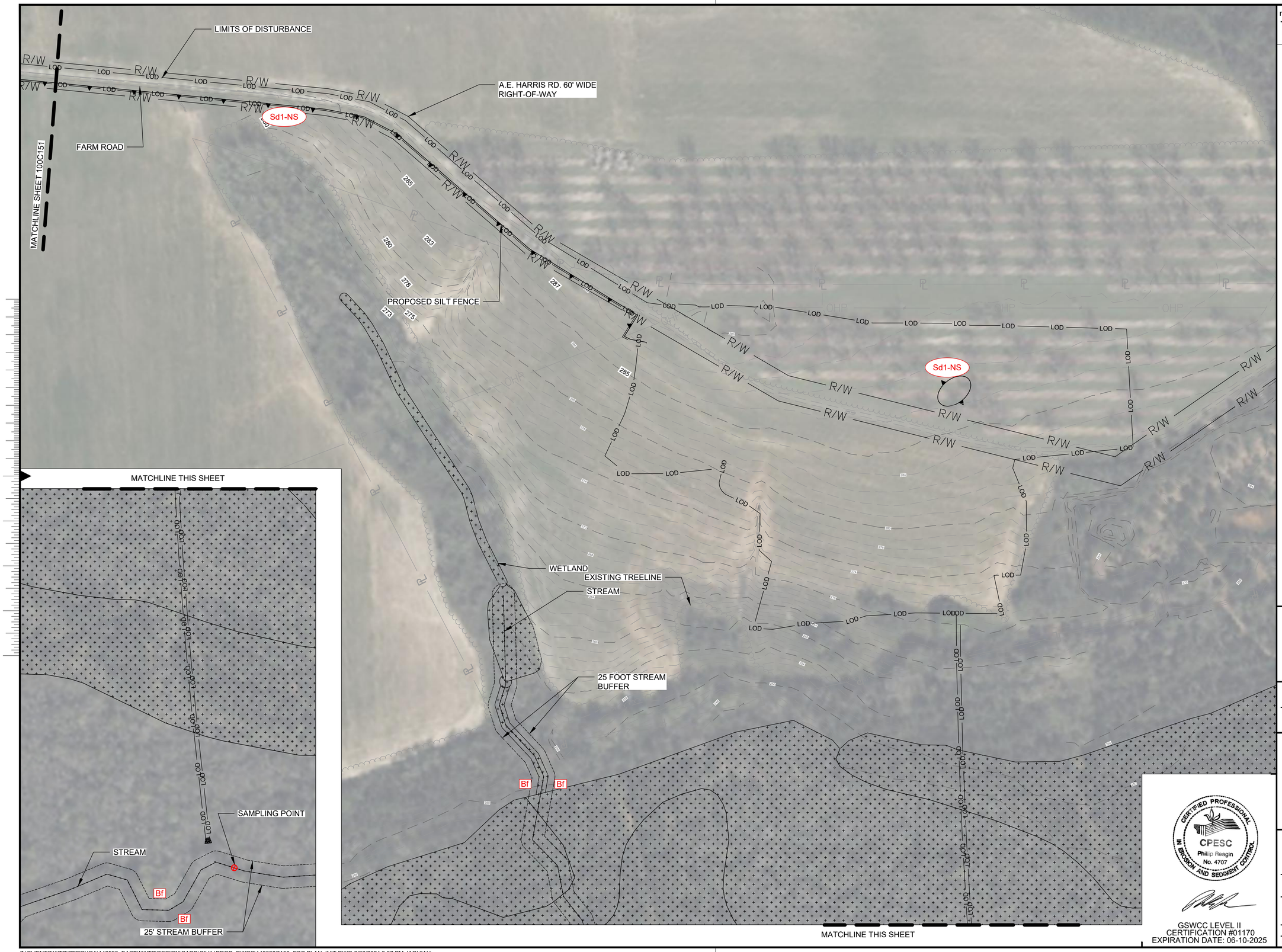

EROSION CONTROL LEGEND:

- Bf — STREAM BUFFER
- Ce — CONSTRUCTION EXIT
- Dc — DIVERSION
- Sd1-S (x2) — SILT FENCE (SENSITIVE, DOUBLE ROW AS NEEDED)
- Sd1-NS — SILT FENCE (NON-SENSITIVE, AS NEEDED)
- Sd3 — TEMPORARY SEDIMENT BASIN
- Ss — SLOPE STABILIZATION
- St — OUTLET PROTECTION
- Su — SURFACE ROUGHENING
- Ds3 — PERMANENT SEEDING
- 300 — EXISTING MAJOR CONTOUR
- 299 — EXISTING MINOR CONTOUR
- R/W — A.E. HARRIS RD. RIGHT-OF-WAY
- EXISTING ROADWAY
- LOD — LIMITS OF DISTURBANCE
- EXISTING TREELINE
- GRAVEL ACCESS ROAD
- STREAMLINE
- WETLAND AREA
- SAMPLING POINT

NORTH

0 100 200
1IN = 100FT

BURNS McDONNELL
4004 SUMMIT BLVD. NE, SUITE 1200
ATLANTA, GA 30319
770-587-4776
LICENSEE NO. PEF000100
AUTHORIZATION NO. J550903

date	detailed
JUNE 26, 2024	C. RICHEY
designed	checked
N. ELLIS	B. SAKIDOVITCH

Perry
HOUSTON COUNTY, GEORGIA

CERTIFIED PROFESSIONAL IN EROSION AND SEDIMENT CONTROL
CPESC
Philip Reagin
No. 4707

GSWCC LEVEL II
CERTIFICATION #01170
EXPIRATION DATE: 06-10-2025

EAST PERRY WWTF
EROSION AND SEDIMENT CONTROL
INITIAL PHASE 2

project	contract
148538	

drawing **100C153 –** rev. **0**

sheet 5 of 11 sheets

file 148538C150_ESC PLAN_INIT.DWG

Z:\CLIENTS\WTR\PERRYGA\148538_EASTWWTP\DESIGN\CADD\CIVIL\PROD_DWGS\148538C150_ESC PLAN_INIT.DWG 6/26/2024 3:07 PM JAQUIAH

no.	date	by	ckd	description
0	6/26/24	NWE	BSS	ISSUED FOR CONSTRUCTION

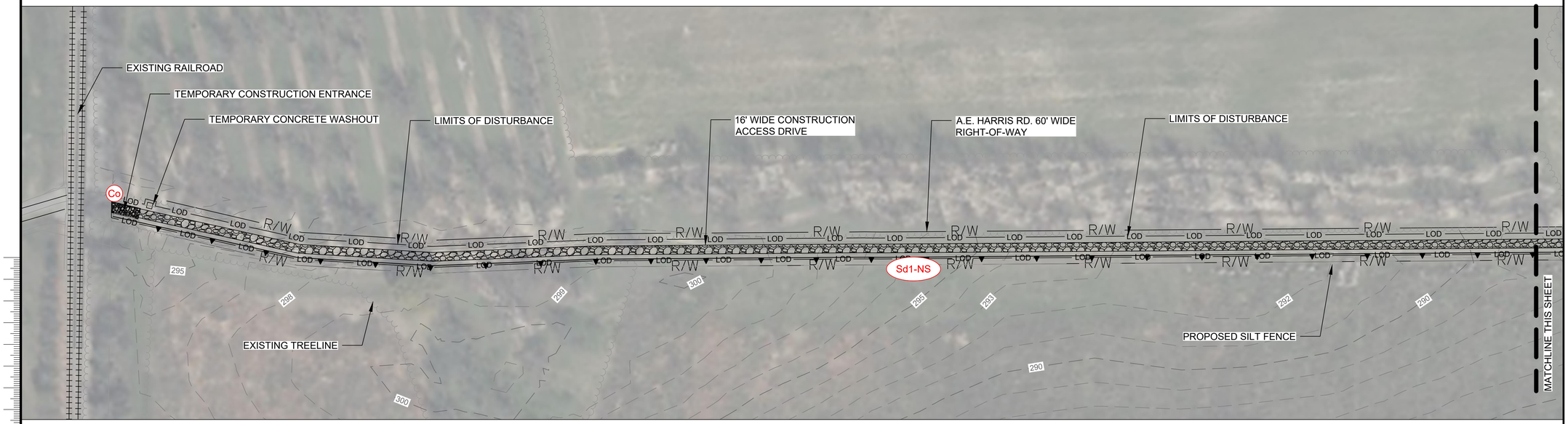

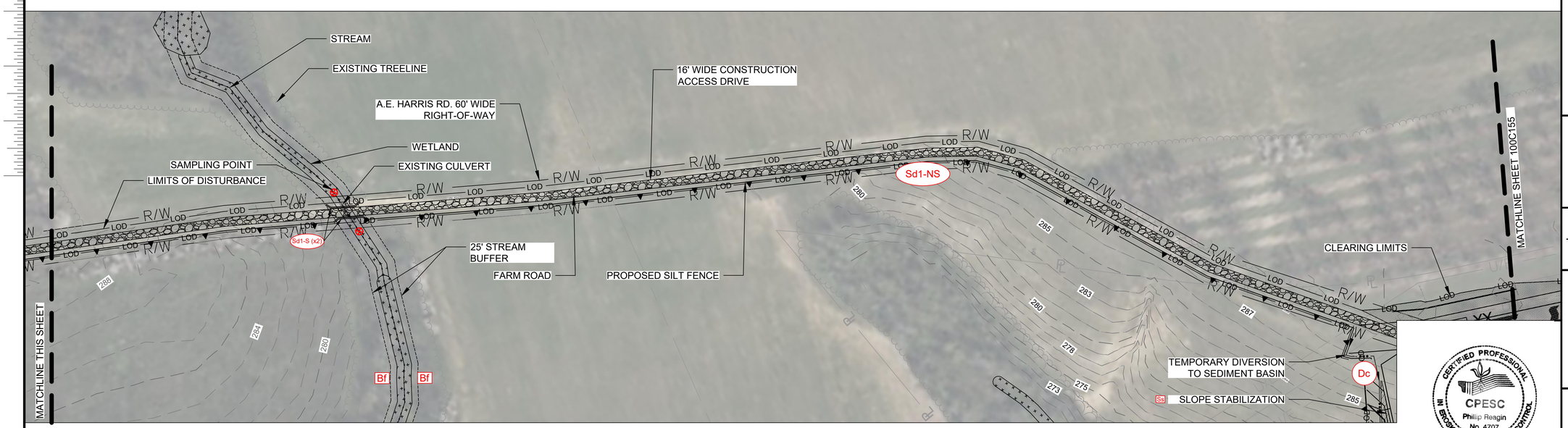

EROSION CONTROL LEGEND:

- Bf — STREAM BUFFER
- Co — CONSTRUCTION EXIT
- Dc — DIVERSION
- Sd1-S (x2) — SILT FENCE (SENSITIVE, DOUBLE ROW AS NEEDED)
- Sd1-NS — SILT FENCE (NON-SENSITIVE, AS NEEDED)
- Sd3 — TEMPORARY SEDIMENT BASIN
- Ss — SLOPE STABILIZATION
- St — OUTLET PROTECTION
- Su — SURFACE ROUGHENING
- Ds3 — PERMANENT SEEDING
- 300 — EXISTING MAJOR CONTOUR
- 299 — EXISTING MINOR CONTOUR
- R/W — A.E. HARRIS RD. RIGHT-OF-WAY
- EXISTING ROADWAY
- LOD — LIMITS OF DISTURBANCE
- EXISTING TREELINE
- GRAVEL ACCESS ROAD
- STREAMLINE
- WETLAND AREA
- SAMPLING POINT

NORTH

0 100 200
1IN = 100FT

BURNS McDONNELL
4004 SUMMIT BLVD. NE, SUITE 1200
ATLANTA, GA 30319
770-587-4776
LICENSEE NO. PEF000100
AUTHORIZATION NO. J550903

date	detailed
JUNE 26, 2024	C. RICHEY
designed	checked
N. ELLIS	B. SAKIDOVITCH

Perry
HOUSTON COUNTY, GEORGIA

CERTIFIED PROFESSIONAL IN EROSION AND SEDIMENT CONTROL
CPESC
Philip Reagin
No. 4707

GSWCC LEVEL II
CERTIFICATION #01170
EXPIRATION DATE: 06-10-2025

EAST PERRY WWTF
EROSION AND SEDIMENT CONTROL
INTERMEDIATE PHASE 1

project	contract
148538	

drawing **100C154** — rev. **0**

sheet 6 of 11 sheets

file 148538C150_ESC PLAN_INTM.DWG

Z:\CLIENTS\WTR\PERRYGA\148538_EASTWWTP\DESIGN\CADD\CIVIL\PROD_DWGS\148538C150_ESC PLAN_INTM.DWG ---- JAQUIAH

no.	date	by	ckd	description
0	6/26/24	NWE	BSS	ISSUED FOR CONSTRUCTION

EROSION CONTROL LEGEND:

- Bf — STREAM BUFFER
- Co — CONSTRUCTION EXIT
- Dc — DIVERSION
- Sd1-S (x2) — SILT FENCE (SENSITIVE, DOUBLE ROW AS NEEDED)
- Sd1-NS — SILT FENCE (NON-SENSITIVE, AS NEEDED)
- Sd3 — TEMPORARY SEDIMENT BASIN
- Ss — SLOPE STABILIZATION
- St — OUTLET PROTECTION
- Su — SURFACE ROUGHENING
- Ds3 — PERMANENT SEEDING
- 300 — EXISTING MAJOR CONTOUR
- 299 — EXISTING MINOR CONTOUR
- R/W — A.E. HARRIS RD. RIGHT-OF-WAY
- EXISTING ROADWAY
- LOD — LIMITS OF DISTURBANCE
- EXISTING TREELINE
- GRAVEL ACCESS ROAD
- STREAMLINE
- WETLAND AREA
- SAMPLING POINT

NORTH

0 100 200
1IN = 100FT

BURNS McDONNELL
4004 SUMMIT BLVD. NE, SUITE 1200
ATLANTA, GA 30319
770-587-4776
LICENSEE NO. PEF000100
AUTHORIZATION NO. J550903

date	detailed
JUNE 26, 2024	C.RICHEY
designed	checked
N. ELLIS	B. SAKIDOVITCH

Perry
HOUSTON COUNTY, GEORGIA

EAST PERRY WWTF
EROSION AND SEDIMENT CONTROL
INTERMEDIATE PHASE 2

project	contract
148538	

drawing **100C155** — rev. **0**

sheet 7 of 11 sheets

file 148538C150_ESC PLAN_INTM.DWG

CERTIFIED PROFESSIONAL IN EROSION AND SEDIMENT CONTROL
CPESC
Phillip Reagin
No. 4707

GSWCC LEVEL II
CERTIFICATION #01170
EXPIRATION DATE: 06-10-2025

MATCHLINE SHEET 100C154

MATCHLINE THIS SHEET

16' WIDE CONSTRUCTION ACCESS ROAD

EXISTING UNDERGROUND GAS LINE

EXISTING OVERHEAD POWER LINE

LIMITS OF DISTURBANCE

SOIL STOCKPILE

PROPOSED SILT FENCE

BARBED WIRE FENCE

TEMPORARY LAYDOWN AREA

EXISTING OVERHEAD POWER LINE

TEMPORARY DIVERSION TO SEDIMENT BASIN

AREA INLET (TYP.)

STORMWATER CONVEYANCE

STORM MANHOLE (TYP.)

WETLAND

SLOPE STABLIZIATION

SEDIMENT BASIN
DRAINAGE AREA = 10.65 ACRES
TOP OF DAM ELEVATION = 273.00
BOTTOM OF POND ELEVATION = 267.00
TOTAL VOLUME = 103,631CF
TOTAL SURFACE AREA = 18,795 SQ. FT
TOP OF WEIR ELEVATION = 272
WEIR WIDTH = 20 FT

TEMPORARY DIVERSION TO SEDIMENT BASIN

25' STREAM BUFFER

25 FOOT STREAM BUFFER

RISER STRUCTURE

EMERGENCY SPILLWAY

TREATED EFFLUENT SEWER

RIP-RAP OUTLET PROTECTION

52 LF 36" CULVERT

TEMPORARY EASEMENT

PERMANENT EASEMENT

MATCHLINE THIS SHEET

25' STREAM BUFFER

STREAM

SAMPLING POINT

Z:\CLIENTS\WTR\PERRYGA\148538_EASTWWTP\DESIGN\CADD\CIVIL\PROD_DWGS\148538C150_ESC PLAN_INTM.DWG ---- JAQUIAH

no.	date	by	ckd	description
0	6/26/24	NWE	BSS	ISSUED FOR CONSTRUCTION

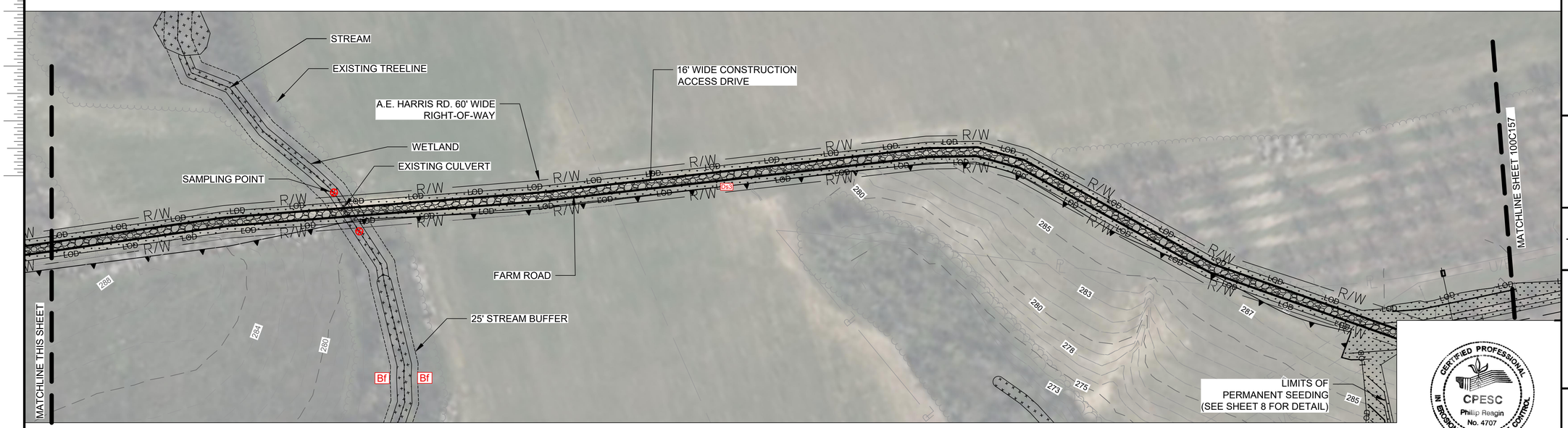

EROSION CONTROL LEGEND:

- Bf — STREAM BUFFER
- Co — CONSTRUCTION EXIT
- Dc — DIVERSION
- Sd1-S (x2) — SILT FENCE (SENSITIVE, DOUBLE ROW AS NEEDED)
- Sd1-NS — SILT FENCE (NON-SENSITIVE, AS NEEDED)
- Sd3 — TEMPORARY SEDIMENT BASIN
- Ss — SLOPE STABILIZATION
- St — OUTLET PROTECTION
- Su — SURFACE ROUGHENING
- Ds3 — PERMANENT SEEDING
- 300 — EXISTING MAJOR CONTOUR
- 299 — EXISTING MINOR CONTOUR
- R/W — A.E. HARRIS RD. RIGHT-OF-WAY
- EXISTING ROADWAY
- LOD — LIMITS OF DISTURBANCE
- EXISTING TREELINE
- ACCESS ROAD
- STREAMLINE
- WETLAND AREA
- SAMPLING POINT

NORTH

0 100 200
1IN = 100FT

BURNS McDONNELL
4004 SUMMIT BLVD. NE, SUITE 1200
ATLANTA, GA 30319
770-587-4776
LICENSEE NO. PEF000100
AUTHORIZATION NO. J550903

date	detailed
JUNE 26, 2024	C. RICHEY
designed	checked
N. ELLIS	B. SAKIDOVITCH

Perry
HOUSTON COUNTY, GEORGIA

CERTIFIED PROFESSIONAL IN EROSION AND SEDIMENT CONTROL
CPESC
Phillip Reagin
No. 4707

GSWCC LEVEL II
CERTIFICATION #01170
EXPIRATION DATE: 06-10-2025

EAST PERRY WWTF
EROSION AND SEDIMENT CONTROL
FINAL PHASE 1

project	contract
148538	

drawing **100C156 –** rev. **0**

sheet 8 of 11 sheets

file 148538C150_ESC PLAN_FINL.DWG

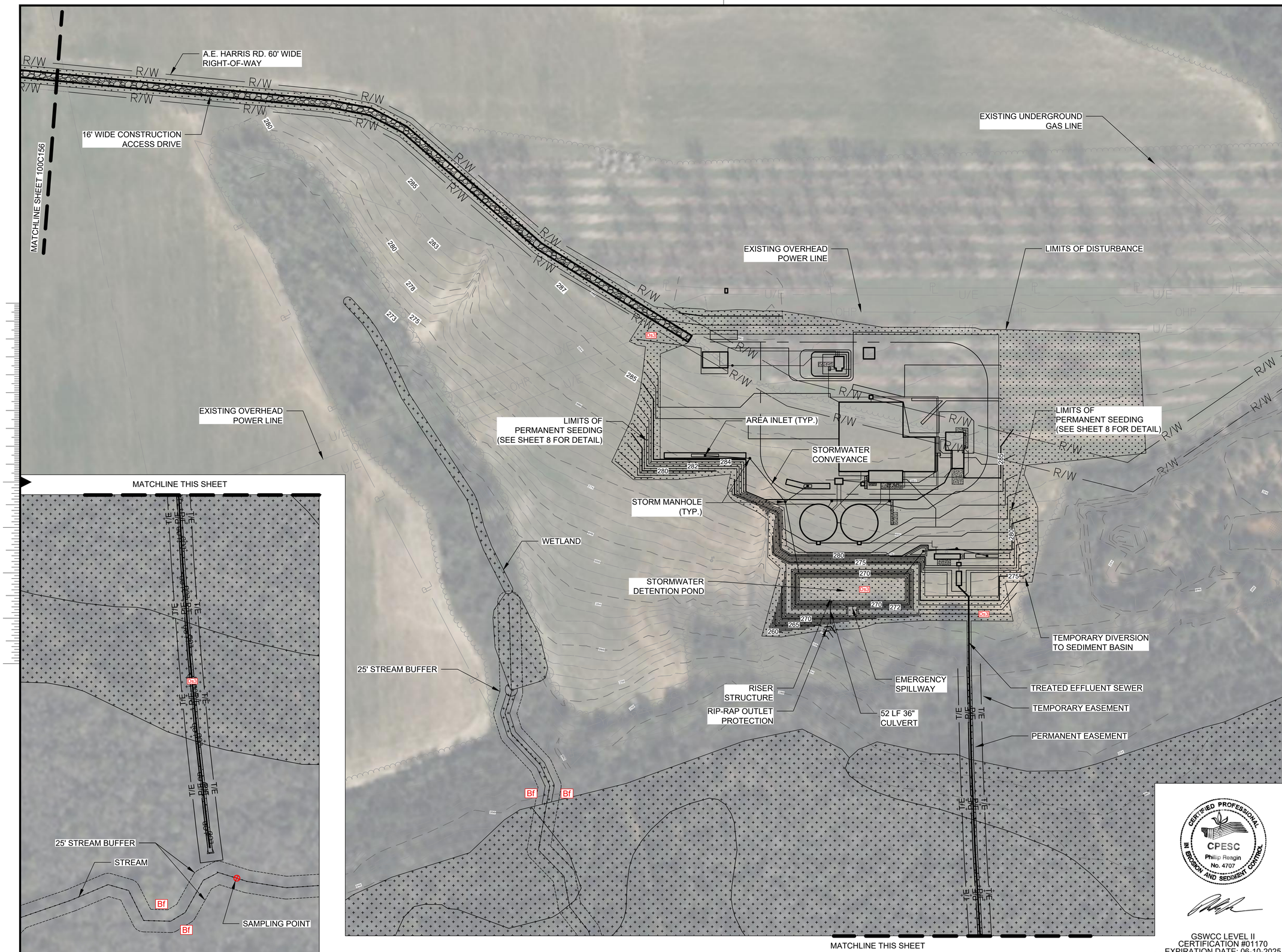

no.	date	by	ckd	description
0	6/26/24	NWE	BSS	ISSUED FOR CONSTRUCTION

EROSION CONTROL LEGEND:

- Bf — STREAM BUFFER
- Co — CONSTRUCTION EXIT
- Dc — DIVERSION
- Sd1-S (x2) — SILT FENCE (SENSITIVE, DOUBLE ROW AS NEEDED)
- Sd1-NS — SILT FENCE (NON-SENSITIVE, AS NEEDED)
- Sd3 — TEMPORARY SEDIMENT BASIN
- Ss — SLOPE STABILIZATION
- St — OUTLET PROTECTION
- Su — SURFACE ROUGHENING
- Ds3 — PERMANENT SEEDING
- 300 — EXISTING MAJOR CONTOUR
- 299 — EXISTING MINOR CONTOUR
- R/W — A.E. HARRIS RD. RIGHT-OF-WAY
- EXISTING ROADWAY
- LOD — LIMITS OF DISTURBANCE
- EXISTING TREELINE
- ACCESS ROAD
- STREAMLINE
- WETLAND AREA
- SAMPLING POINT

NORTH

0 100 200
1IN = 100FT

BURNS McDONNELL
4004 SUMMIT BLVD. NE, SUITE 1200
ATLANTA, GA 30319
770-587-4776
LICENSEE NO. PEF000100
AUTHORIZATION NO. J550903

date	detailed
JUNE 26, 2024	C. RICHEY
designed	checked
N. ELLIS	B. SAKIDOVITCH

Perry
HOUSTON COUNTY, GEORGIA

CERTIFIED PROFESSIONAL IN EROSION AND SEDIMENT CONTROL
CPESC
Philip Reagin
No. 4707

GSWCC LEVEL II
CERTIFICATION #01170
EXPIRATION DATE: 06-10-2025

EAST PERRY WWTF
EROSION AND SEDIMENT CONTROL
FINAL PHASE 2

project	contract
148538	

drawing **100C157** — rev. **0**

sheet 9 of 11 sheets

file 148538C150_ESC PLAN_FINL.DWG

Z:\CLIENTS\WTR\PERRYGA\148538_EASTWWTP\DESIGN\CADD\CIVIL\PROD_DWGS\148538C150_ESC PLAN_FINL.DWG 6/26/2024 4:12 PM JAQUIAH

GEORGIA
UNIFORM CODING SYSTEM
FOR SOIL EROSION AND SEDIMENT CONTROL PRACTICES
GEORGIA SOIL AND WATER CONSERVATION COMMISSION

STRUCTURAL PRACTICES

CODE	PRACTICE	DETAIL	MAP SYMBOL	DESCRIPTION
	CHECKDAM			A small temporary barrier or dam constructed across a swale, drainage ditch or area of concentrated flow.
Ch	CHANNEL STABILIZATION			Improving, constructing or stabilizing an open channel, existing stream, or ditch.
Co	CONSTRUCTION EXIT		Co	A crushed stone pad located at the construction site exit to provide a place for removing mud from tires thereby protecting public streets.
Cr	CONSTRUCTION ROAD STABILIZATION		Cr	A travelway constructed as part of a construction plan including access roads, subdivision roads, parking areas and other on-site vehicle transportation routes.
Dc	STREAM DIVERSION CHANNEL			A temporary channel constructed to convey flow around a construction site while a permanent structure is being constructed.
Di	DIVERSION			An earth channel or dike located above, below, or across a slope to divert runoff. This may be a temporary or permanent structure.
Dn1	TEMPORARY DOWNDRAIN STRUCTURE		Dn	A flexible conduit of heavy-duty fabric or other material designed to safely conduct surface runoff down a slope. This is temporary and inexpensive.
Dn2	PERMANENT DOWNDRAIN STRUCTURE		Dn	A paved chute, pipe, sectional conduit or similar material designed to safely conduct surface runoff down a slope.
Fr	FILTER RING			A temporary stone barrier constructed at storm drain inlets and pond outlets.
Ga	GABION			Rock filter baskets which are hand-placed into position forming soil stabilizing structures.
Gr	GRADE STABILIZATION STRUCTURE		Gr	Permanent structures installed to protect channels or waterways where otherwise the slope would be sufficient for the running water to form gullies.
Lv	LEVEL SPREADER			A structure to convert concentrated flow of water into less erosive sheet flow. This should be constructed only on undisturbed soils.
Rd	ROCK FILTER DAM			A permanent or temporary stone filter dam installed across small streams or drainageways.
Re	RETAINING WALL		Re	A wall installed to stabilize cut and fill slopes where maximum permissible slopes are not obtainable. Each situation will require special design.
Rt	RETRO FITTING		Rt	A device or structure placed in front of a permanent stormwater detention pond outlet structure to serve as a temporary sediment filter.
Sd1	SEDIMENT BARRIER		Sd1 Sd2	A barrier to prevent sediment from leaving the construction site. It may be sandbags, bales of straw or hay, brush, logs and poles, gravel, or a silt fence.
Sd2	INLET SEDIMENT TRAP			An impounding area created by excavating around a storm drain drop inlet. The excavated area will be filled and stabilized on completion of construction activities.
Sd3	TEMPORARY SEDIMENT BASIN		Sb	A basin created by excavation or a dam across a waterway. The surface water runoff is temporarily stored allowing the bulk of the sediment to drop out.
Sd4	TEMPORARY SEDIMENT TRAP			A small temporary pond that drains a disturbed area so that sediment can settle out. The principle feature distinguishing a temporary sediment trap from a temporary sediment basin is the lack of a pipe or riser.
Sk	FLOATING SURFACE SKIMMER		Sk	A buoyant device that releases/drains water from the surface of sediment ponds, traps, or basins at a controlled rate of flow.
Spb	SEEP BERM			A linear control device constructed as a diversion perpendicular to the direction of the runoff to enhance dissipation and infiltration of runoff, while creating multiple sedimentation chambers with the employment of intermediate dikes.

STRUCTURAL PRACTICES

CODE	PRACTICE	DETAIL	MAP SYMBOL	DESCRIPTION
Sr	TEMPORARY STREAM CROSSING		Sr	A temporary bridge or culvert-type structure protecting a stream or watercourse from damage by crossing construction equipment.
St	STORMDRAIN OUTLET PROTECTION		St	A paved or short section of riprap channel at the outlet of a storm drain system preventing erosion from the concentrated runoff.
Su	SURFACE ROUGHENING		Su	A rough soil surface with horizontal depressions on a contour or slopes left in a roughened condition after grading.
Tc	TURBIDITY CURTAIN		Tc	A floating or staked barrier installed within the water (it may also be referred to as a floating boom, silt barrier, or silt curtain).
Tp	TOPSOILING		Tp	The practice of stripping off the more fertile soil, storing it, then spreading it over the disturbed area after completion of construction activities.
Tr	TREE PROTECTION		Tr	To protect desirable trees from injury during construction activity.
Wt	VEGETATED WATERWAY OR STORMWATER CONVEYANCE CHANNEL			Paved or vegetative water outlets for diversions, terraces, berms, dikes or similar structures.

VEGETATIVE PRACTICES

CODE	PRACTICE	DETAIL	MAP SYMBOL	DESCRIPTION
Bf	BUFFER ZONE		Bf	Strip of undisturbed original vegetation, enhanced or restored existing vegetation or the reestablishment of vegetation surrounding an area of disturbance or bordering streams.
Cs	COASTAL DUNE STABILIZATION (WITH VEGETATION)		Cs	Planting vegetation on dunes that are denuded, artificially constructed, or re-nourished.
Ds1	DISTURBED AREA STABILIZATION (WITH MULCHING ONLY)		Ds1	Establishing temporary protection for disturbed areas where seedings may not have a suitable growing season to produce an erosion retarding cover.
Ds2	DISTURBED AREA STABILIZATION (WITH TEMP SEEDING)		Ds2	Establishing a temporary vegetative cover with fast growing seedings on disturbed areas.
Ds3	DISTURBED AREA STABILIZATION (WITH PERM SEEDING)		Ds3	Establishing a permanent vegetative cover such as trees, shrubs, vines, grasses, or legumes on disturbed areas.
Ds4	DISTURBED AREA STABILIZATION (SODDING)		Ds4	A permanent vegetative cover using sods on highly erodable or critically eroded lands.
Du	DUST CONTROL ON DISTURBED AREAS		Du	Controlling surface and air movement of dust on construction site, roadways and similar sites.
Fl-Co	FLOCCULANTS AND COAGULANTS		Fl-Co	Substance formulated to assist in the solids/liquid separation of suspended particles in solution.
Sb	STREAMBANK STABILIZATION (USING PERM VEGETATION)		Sb	The use of readily available native plant materials to maintain and enhance streambanks, or to prevent, or restore and repair small streambank erosion problems.
Ss	SLOPE STABILIZATION		Ss	A protective covering used to prevent erosion and establish temporary or permanent vegetation on steep slopes, shore lines, or channels.
Tac	TACKIFIERS AND BINDERS		Tac	Substance used to anchor straw or hay mulch by causing the organic material to bind together.

UNIFORM CODING SYSTEM
NTS

Co CRUSHED STONE CONSTRUCTION EXIT

EXIT DIAGRAM

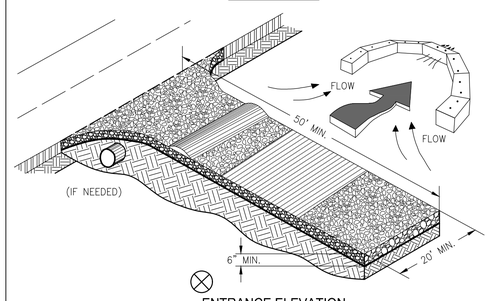

NOTES:
1. AVOID LOCATING ON STEEP SLOPES OR AT CURVES ON PUBLIC ROADS.
2. REMOVE ALL VEGETATION AND OTHER UNSUITABLE MATERIAL FROM THE FOUNDATION AREA, GRADE, AND CROWN FOR POSITIVE DRAINAGE.
3. AGGREGATE SIZE SHALL BE IN ACCORDANCE WITH NATIONAL STONE ASSOCIATION R-2 (1.5"-3.5" STONE).
4. GRAVEL PAD SHALL HAVE A MINIMUM THICKNESS OF 6".
5. PAD WIDTH SHALL BE EQUAL FULL WIDTH AT ALL POINTS OF VEHICULAR EGRESS, BUT NO LESS THAN 20'.
6. A DIVERSION RIDGE SHOULD BE CONSTRUCTED WHEN GRADE TOWARD PAVED AREA IS GREATER THAN 2%..
7. INSTALL PIPE UNDER THE ENTRANCE IF NEEDED TO MAINTAIN DRAINAGE DITCHES.
8. WHEN WASHING IS REQUIRED, IT SHOULD BE DONE ON AN AREA STABILIZED WITH CRUSHED STONE THAT DRAINS INTO AN APPROVED SEDIMENT TRAP OR SEDIMENT BASIN (DIVERT ALL SURFACE RUNOFF AND DRAINAGE FROM THE ENTRANCE TO A SEDIMENT CONTROL DEVICE).
9. WASHRACKS AND/OR TIRE WASHERS MAY BE REQUIRED DEPENDING ON SCALE AND CIRCUMSTANCE. IF NECESSARY, WASHRACK DESIGN MAY CONSIST OF ANY MATERIAL SUITABLE FOR TRUCK TRAFFIC THAT REMOVE MUD AND DIRT.
10. MAINTAIN AREA IN A WAY THAT PREVENTS TRACKING AND/OR FLOW OF MUD ONTO PUBLIC RIGHTS-OF-WAYS. THIS MAY REQUIRE TOP DRESSING, REPAIR AND/OR CLEANOUT OF ANY MEASURES USED TO TRAP SEDIMENT.

TEMPORARY CONSTRUCTION ENTRANCE
NTS

Sd1-NS SILT FENCE - TYPE NON-SENSITIVE

SIDE VIEW

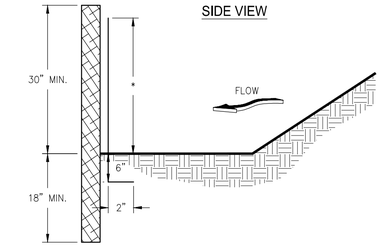

FRONT VIEW

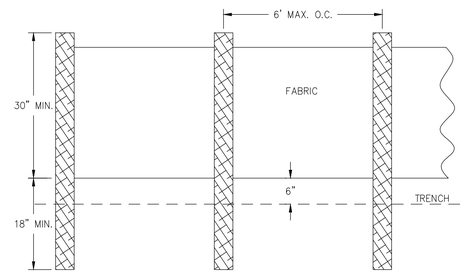

NOTES:
1. USE STEEL OR WOOD POSTS OR AS SPECIFIED BY THE EROSION, SEDIMENTATION, AND POLLUTION CONTROL PLAN.
2. HEIGHT (*) IS TO BE SHOWN ON THE EROSION, SEDIMENTATION, AND POLLUTION CONTROL PLAN.

SILT FENCE-TYPE NON-SENSITIVE
NTS

Su FILL SLOPE TREATMENT

EACH LIFT OF THE FILL IS COMPACTED, BUT THE OUTER FACE OF THE SLOPE IS ALLOWED TO REMAIN LOOSE SO THAT THE ROCKS, CLODS, ETC. REACH THE NATURAL ANGLE OF REPOSE.

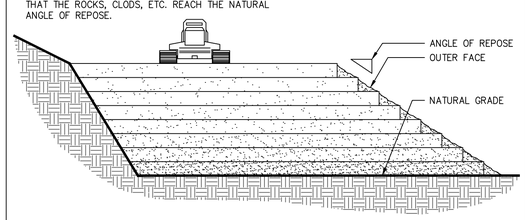

TRACKING

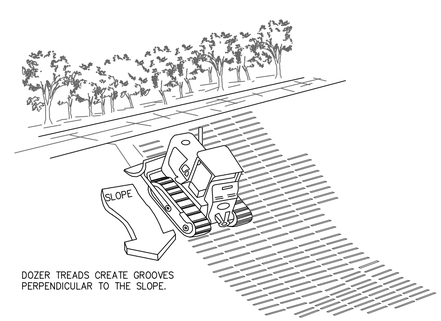

SURFACE ROUGHENING
NTS

TYPICAL INSTALLATION GUIDELINES FOR ROLLED EROSION CONTROL PRODUCTS (RECP) SS

BLANKET AND MATTING CROSS-SECTIONS

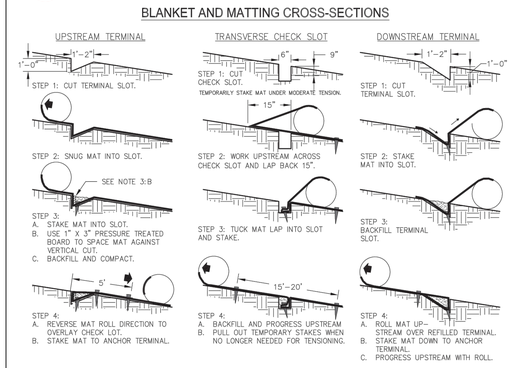

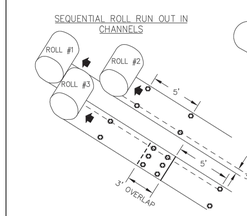

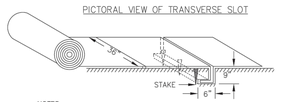

NOTES:
1. START AT DOWNSTREAM TERMINAL AND PROGRESS UPSTREAM.
2. FIRST ROLL IS CENTERED LONGITUDINALLY IN MID-CHANNEL AND PINNED WITH TEMPORARY STAKES TO MAINTAIN ALIGNMENT.
3. SUBSEQUENT ROLLS FOLLOW IN STAGGERED SEQUENCE BEHIND THE FIRST ROLL; USE THE CENTER ROLL FOR ALIGNMENT TO THE CHANNEL CENTER.
4. WORK OUTWARDS FROM THE CHANNEL CENTER TO THE EDGE.
5. USE 3" OVERLAPS AND STAKE AT 5' INTERVALS ALONG THE SEAMS.
6. USE 3' OVERLAPS AND SHINGLE DOWNSTREAM TO CONNECT THE LINING AT THE ROLL ENDS.

SLOPE PROTECTION
NTS

CERTIFIED PROFESSIONAL IN EROSION AND SEDIMENT CONTROL
CPESC
Phillip Reagin
No. 4707

GSWCC LEVEL II
CERTIFICATION #01170
EXPIRATION DATE: 06-10-2025

no.	date	by	ckd	description
0	6/26/24	NWE	BSS	ISSUED FOR CONSTRUCTION

BURNS McDONNELL
4004 SUMMIT BLVD. NE, SUITE 1200
ATLANTA, GA 30319
770-587-4776
LICENSEE NO. PEF000100
AUTHORIZATION NO. J550903

date	detailed
JUNE 26, 2024	C. RICHEY
designed	checked
N. ELLIS	B. SAKIDOVITCH

Perry
HOUSTON COUNTY, GEORGIA

EAST PERRY WWTF
EROSION & SEDIMENT CONTROL
DETAILS 1

project	contract
148538	

drawing **100C510 –** rev. **0**

sheet 10 of 11 sheets

file 148538C510_ESC DETAILS.DWG

no.	date	by	ckd	description
0	6/26/24	NWE	BSS	ISSUED FOR CONSTRUCTION

Dc TYPICAL DIVERSION ACROSS ROAD

CROSS SECTION

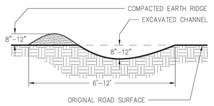

Figure 6-17.1

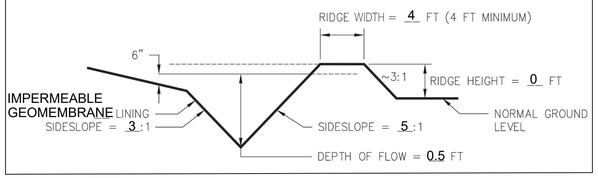

TYPICAL DIVERSION

NTS

Sd3 BASIC COMPONENTS OF TEMPORARY SEDIMENT BASIN

CROSS SECTION

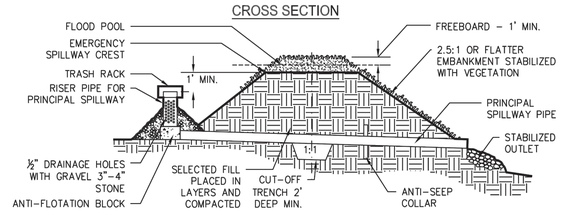

FILL HEIGHT	MINIMUM TOP WIDTH
LESS THAN 10 FEET	8.0 FEET
10 FEET TO 15 FEET	10.0 FEET

PLAN VIEW

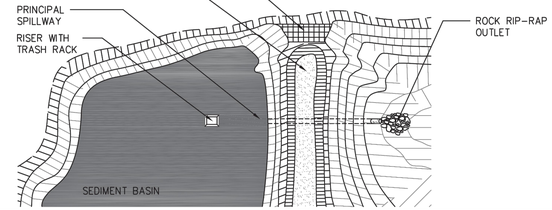

NOTES:
1. THE EMERGENCY SPILLWAY SHALL BE INSTALLED IN UNDISTURBED GROUND.
2. THE EMERGENCY SPILLWAY MUST BE CONSTRUCTED WITHIN A TOLERANCE OF 0.2 FEET.

TEMPORARY SEDIMENT BASIN

NTS

EXCAVATED EARTH SPILLWAY -- PLAN VIEW

TYPICAL SPILLWAY

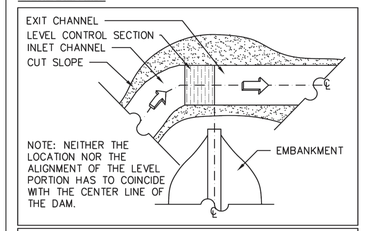

WING DIKE SPILLWAY

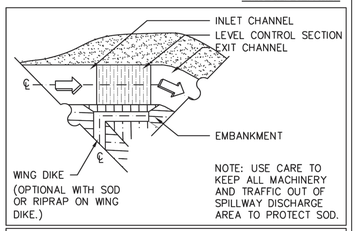

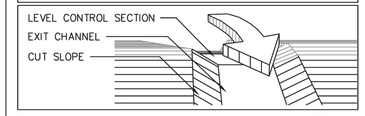

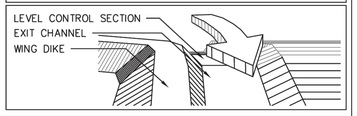

PROFILE ALONG CENTERLINE

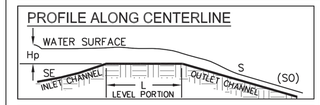

CROSS-SECTION OF CONTROL SECTION

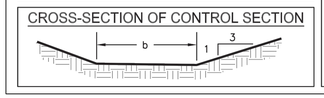

LEGEND:
Hp = DIFFERENCE IN ELEVATION BETWEEN CREST OF EARTH SPILLWAY AT THE CONTROL SECTION AND WATER SURFACE IN THE RESERVOIR (IN FEET).
b = BOTTOM WIDTH OF EARTH SPILLWAY AT THE CONTROL SECTION (IN FEET) SEE TABLE 6-22.4
Q = TOTAL DISCHARGE (IN CFS.)
V = VELOCITY (IN FEET PER SECOND) THAT WILL EXIST IN CHANNEL BELOW CONTROL SECTION, AT DESIGN Q, IF CONSTRUCTED TO SLOPE (S) THAT IS SHOWN (TABLE 6-22.4)
S = FLATTEST SLOPE (IN %) ALLOWABLE FOR CHANNEL BELOW CONTROL SECTION (TABLE 6-22.4)
Se = ENTRY SLOPE
So = EXIT SLOPE

NOTES:
1. FOR Q, V, AND S RELATIONSHIPS, SEE THE CHART ON THE FOLLOWING PAGE.
2. FOR A GIVEN HP, A DECREASE IN THE EXIT SLOPE AS GIVEN IN THE TABLE DECREASES SPILLWAY DISCHARGE, BUT INCREASING THE EXIT SLOPE FROM S DOES NOT INCREASE DISCHARGE. IF AN EXIT SLOPE (So) IS STEEPER THAN S IS USED, THE VELOCITY (Vo) IN THE EXIT CHANNEL WILL INCREASE ACCORDING TO THE FOLLOWING RELATIONSHIP:

$$Vo = V\,(So/S)^{0.3}$$

EMERGENCY SPILLWAY

NTS

St RIPRAP OUTLET PROTECTION

PIPE OUTLET TO FLAT AREA -- NO WELL DEFINED CHANNEL

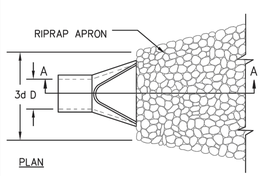

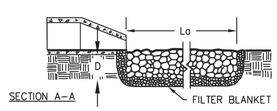

NOTES:
1. Lo IS THE LENGTH OF THE RIPRAP APRON.
2. D = 1.5 TIMES THE MAXIMUM STONE DIAMETER BUT NOT LESSHAN 6".
3. IN A WELL-DEFINED CHANNEL, EXTEND THE APRON UP THE CHANNEL BANKS TO AN ELEVATION OF 6" ABOVE THE MAXIMUM TAILWATER DEPTH OR TO THE TOP OF THE BANK (WHICHEVER IS LESS).
4. A FILTER BLANKET OR FILTER FABRIC SHOULD BE INSTALLED BETWEEN THE RIPRAP AND THE SOIL FOUNDATION.

PIPE OUTLET TO WELL DEFINED CHANNEL

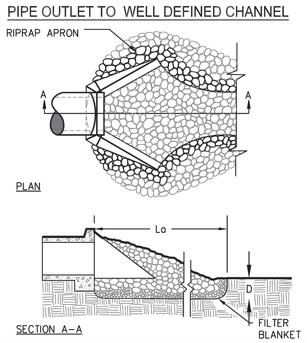

RIPRAP OUTLET PROTECTION

NTS

CONCRETE WASHOUT

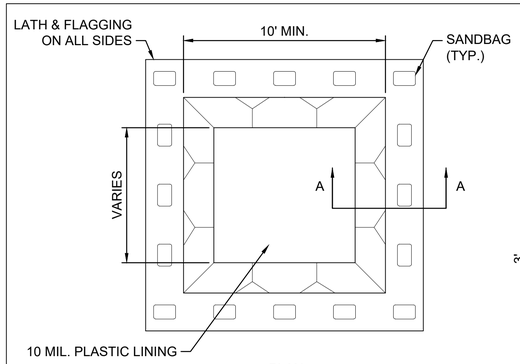

PLAN

TYPE "BELOW GRADE"

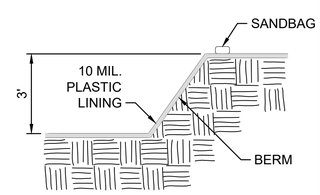

SECTION A-A

NOTES:
1. THE CONTRACTOR MUST PROVIDE A DESIGNATED AREA FOR CONCRETE WASHDOWN OF TOOLS, CONCRETE MIXER CHUTES, HOPPERS, AND THE REAR OF THE VEHICLES. THIS AREA MUST HAVE A CONCRETE WASHOUT FACILITY AND SHALL BE CONSTRUCTED ACCORDING TO THE DETAIL SHOWN ABOVE.
2. THE CONCRETE WASHOUT FACILITY SHALL BE LOCATED A MINIMUM OF 50 FEET FROM STORM DRAINS, OPEN DITCHES, OR WATER BODIES.
3. WASHOUT DISCHARGE FROM THE CLEANING OF CONCRETE TRUCKS, ROOLS, AND OTHER EQUIPMENT SHALL NOT BE DISCHARGED INTO STORM DRAINS, OPEN DITCHES, STREETS, OR STREAMS.
4. EXCESS CONCRETE SHALL NOT BE DISPOSED OF ON SITE. ALL EXCESS CONCRETE SHALL BE TRANSPORTED OFF-SITE AND DISPOSED OF PROPERLY.
5. IT IS PROHIBITED TO WASHOUT THE MIXING DRUM OF CONCRETE TRUCKS ON-SITE.

CERTIFIED PROFESSIONAL IN EROSION AND SEDIMENT CONTROL
CPESC
Phillip Reagin
No. 4707

GSWCC LEVEL II
CERTIFICATION #01170
EXPIRATION DATE: 06-10-2025

BURNS McDONNELL
4004 SUMMIT BLVD. NE, SUITE 1200
ATLANTA, GA 30319
770-587-4776
LICENSEE NO. PEF000100
AUTHORIZATION NO. J550903

date	detailed
JUNE 26, 2024	C. RICHEY
designed	checked
N. ELLIS	B. SAKIDOVITCH

Perry

HOUSTON COUNTY, GEORGIA

EAST PERRY WWTF

EROSION & SEDIMENT CONTROL DETAILS 1

project 148538 | contract

drawing **100C511** – rev. **0**

sheet 11 of 11 sheets

file 148538C510_ESC DETAILS.DWG

STRUCTURAL LEGEND

MATERIAL HATCH PATTERNS

- UNDISTURBED EARTH OR NATIVE SOIL
- BRICK (COMMON/FACE)
- COMPACTED FILL
- STEEL
- ROCK
- ALUMINUM
- GRANULAR FILL
- GRATING
- CONCRETE
- CHECKERED PLATE
- GROUT
- VOID FORM
- CONCRETE MASONRY UNITS (PLAN/SECTION)
- EPS (GEOFOAM)
- CONCRETE MASONRY UNIT (ELEVATION)
- DEMOLITION

STANDARD STRUCTURAL ABBREVIATIONS

#	NUMBER OR POUND(S)
%	PERCENT
&	AND
@	AT
AA	ALUMINUM ASSOCIATION
AB	ANCHOR BOLT
ACI	AMERICAN CONCRETE INSTITUTE
ACO	AT CONTRACTORS OPTION
ADDL	ADDITIONAL
ADH	ADHESIVE
ADJ	ADJACENT
AFF	ABOVE FINISH FLOOR
AGGR	AGGREGATE
AHJ	AUTHORITY HAVING JURISDICTION
AHR	ANCHOR
AISC	AMERICAN INSTITUTE OF STEEL CONSTRUCTION
AISI	AMERICAN IRON AND STEEL INSTITUTE
ALT	ALTERNATE
ALUM	ALUMINUM
ANSI	AMERICAN NATIONAL STANDARDS INSTITUTE
APPD	APPROVED
APPROX	APPROXIMATE
ARCH	ARCHITECT(URAL)
ASCE	AMERICAN SOCIETY OF CIVIL ENGINEERS
ASTM	ASTM INTERNATIONAL
AWS	AMERICAN WELDING SOCIETY
B/B	BACK TO BACK
BC	BOLT CIRCLE
BFF	BELOW FINISH FLOOR
BLDG	BUILDING
BLW	BELOW
BM	BEAM
BOS	BOTTOM OF STEEL
BOT	BOTTOM
BRCG	BRACING
BRDG	BRIDGING
BRG	BEARING
BTWN	BETWEEN
C	CHANNEL SHAPE
C/C	CENTER TO CENTER
CAP	CAPACITY
CFS	COLD-FORMED STEEL
CHFR	CHAMFER
CIP	CAST-IN-PLACE
CIR	CIRCLE
CIS	CENTERED IN SLAB
CIW	CENTERED IN WALL
CJ	CONSTRUCTION JOINT
CJP	COMPLETE JOINT PENETRATION
CL	CENTER LINE
CLJ	COLUMN LINE
CLR	CLEAR
CMPST	COMPOSITE
CMU	CONCRETE MASONRY UNIT
CNR	CORNER
COL	COLUMN
CONC	CONCRETE
CONN	CONNECTION
CONSTR	CONSTRUCTION
CONT	CONTINUOUS
CONTR	CONTRACTOR
COORD	COORDINATE
COTR	CONTRACTING OFFICER'S TECHNICAL REPRESENTATIVE
CPRS	COMPRESSIBLE
CRSI	CONCRETE REINFORCING STEEL INSTITUTE
CTJ	CONTRACTION JOINT
CTR	CENTER(ED)
CY	CUBIC YARD(S)
D	DEEP (DEPTH)
DBL	DOUBLE
DEG	DEGREE(S)
DEMO	DEMOLISH (DEMOLITION)
DET	DETAIL
DIA	DIAMETER
DIAG	DIAGONAL
DIM	DIMENSION
DIR	DIRECTION
DIV	DIVISION
DK	DECK
DL	DEAD LOAD
DWG	DRAWING
DWL	DOWEL
E	EAST
EA	EACH
EF	EACH FACE
EJ	EXPANSION JOINT
EL	ELEVATION
EL	EARTHQUAKE LOAD
ELEC	ELECTRICAL
ELEV	ELEVATOR
EMBED	EMBEDMENT
ENGR	ENGINEER
EOD	EDGE OF DECK
EOS	EDGE OF SLAB
EQ	EQUAL
EQUIP	EQUIPMENT
EQUIV	EQUIVALENT
ETC	AND SO FORTH
EW	EACH WAY
EXP	EXPANSION
EXST	EXISTING
EXT	EXTERIOR OR EXTERNAL
EXTN	EXTENSION
FAB	FABRICATE
FD	FLOOR DRAIN
FDTN	FOUNDATION
FF	FAR FACE
FIN	FINISH
FLG	FLANGE
FLR	FLOOR
FR	FRAME
FRMG	FRAMING
FRP	FIBER-REINFORCED POLYMER
FS	FAR SIDE
FT	FOOT (FEET)
FTG	FOOTING
FUT	FUTURE
GA	GAGE
GALV	GALVANIZE(D)
GB	GRADE BEAM
GC	GENERAL CONTRACTOR
GDR	GUARDRAIL
GEN	GENERAL
GOVT	GOVERNMENT
GR	GRADE
GRTG	GRATING
GT	GROUT
H	HIGH (HEIGHT)
HC	HOLLOW CORE
HGR	HANGER
HORIZ	HORIZONTAL
HP	BEARING PILE SHAPE
HPT	HIGH POINT
HS	HIGH STRENGTH
HSS	HOLLOW STRUCTURAL SECTION
I	MOMENT OF INERTIA
IBC	INTERNATIONAL BUILDING CODE
ID	INSIDE DIAMETER
IF	INSIDE FACE
IJ	ISOLATION JOINT
IN	INCH(ES)
INFO	INFORMATION
INT	INTERIOR
INV	INVERT
IR	INSIDE RADIUS
JST	JOIST
JT	JOINT
KB	KNEE BRACE
KIP	THOUSAND POUNDS
KLF	KIP(S) PER LINEAR FOOT
KPL	KICK PLATE
KSF	KIP(S) PER SQUARE FOOT
KSI	KIP(S) PER SQUARE INCH
L	ANGLE SHAPE OR LENGTH
LAD	LADDER
LBS	POUND(S)
LD	DEVELOPMENT LENGTH
LG	LONG
LL	LIVE LOAD
LLH	LONG LEG HORIZONTAL
LLO	LONG LEG OUTSTANDING
LLV	LONG LEG VERTICAL
LONG	LONGITUDINAL
LPT	LOW POINT
LSL	LONG-SLOT HOLE(S)
LTWT	LIGHTWEIGHT
MATL	MATERIAL
MAX	MAXIMUM
MBMA	METAL BUILDING MANUFACTURERS ASSOCIATION
MBS	METAL BUILDING SYSTEM
MC	MISCELLANEOUS CHANNEL SHAPE OR MOMENT CONNECTION
MECH	MECHANICAL
MEZZ	MEZZANINE
MFR	MANUFACTURER
MIN	MINIMUM
MISC	MISCELLANEOUS
MSL	MEAN SEA LEVEL
MTL	METAL
N	NORTH
NA	NOT APPLICABLE
NAAMM	NATIONAL ASSOCIATION OF ARCHITECTURAL METAL MANUFACTURERS
NAVD	NORTH AMERICAN VERTICAL DATUM
NCMA	NATIONAL CONCRETE MASONRY ASSOCIATION
NE	NORTHEAST
NF	NEAR FACE
NIC	NOT IN CONTRACT
NO	NUMBER
NOM	NOMINAL
NS	NEAR SIDE
NTS	NOT TO SCALE
NW	NORTHWEST
OC	ON CENTER
OD	OUTSIDE DIAMETER
OF	OUTSIDE FACE
OPH	OPPOSITE HAND
OPNG	OPENING
OPP	OPPOSITE
OR	OUTSIDE RADIUS
OSHA	OCCUPATIONAL SAFETY AND HEALTH ADMINISTRATION
OVS	OVERSIZE HOLE(S)
PAR	PARALLEL
PCA	PORTLAND CEMENT ASSOCIATION
PCC	PRECAST CONCRETE
PCF	POUND(S) PER CUBIC FOOT
PCI	POUND(S) PER CUBIC INCH OR PRECAST/PRESTRESSED CONCRETE INSTITUTE
PED	PEDESTAL
PERP	PERPENDICULAR
PH	PHASE
PL	PLATE
PLBG	PLUMBING
PLC	PLACE(S)
PLF	POUND(S) PER LINEAR FOOT
PREFAB	PREFABRICATE(D)
PREP	PREPARATION
PS	PIPE SUPPORT
PSF	POUND(S) PER SQUARE FOOT
PSI	POUND(S) PER SQUARE INCH
PT	PRETENSIONED JOINT
PUR	PURLIN
PVC	POLYVINYL CHLORIDE
QA	QUALITY ASSURANCE
QC	QUALITY CONTROL
R	RADIUS OR RISER(S)
RD	ROOF DRAIN
REBAR	REINFORCING STEEL BAR(S)
REF	REFERENCE
REINF	REINFORCE(D)
REQD	REQUIRED
REV	REVISION
RF	ROOF
RM	ROOM
RST	REINFORCING STEEL
S	SECTION MODULUS OR SOUTH OR AMERICAN STANDARD BEAM SHAPE
SB	SHEAR BAR
SC	SLIP-CRITICAL JOINT
SCHED	SCHEDULE
SDI	STEEL DECK INSTITUTE
SE	SOUTHEAST
SECT	SECTION
SEI	STRUCTURAL ENGINEERING INSTITUTE
SF	SWAY FRAME
SHT	SHEET
SIM	SIMILAR
SJI	STEEL JOIST INSTITUTE
SLNT	SEALANT
SLO	SHORT LEG OUTSTANDING
SLV	SLEEVE
SP	SPACE(S)
SPEC	SPECIFICATION(S)
SQ	SQUARE
SSL	SHORT-SLOT HOLE(S)
SST	STAINLESS STEEL
ST	SNUG-TIGHT JOINT
STD	STANDARD
STIF	STIFFENER
STIR	STIRRUP
STL	STEEL
STR	STRAIGHT
STRUCT	STRUCTURAL
SUB	SUBSTITUTE
SUPT	SUPPORT
SW	SOUTHWEST
SYMM	SYMMETRICAL
T	TON(S) OR TREAD(S)
T&B	TOP AND BOTTOM
T/	TOP OF
TB	THROUGH BOLT
TD	TRENCH DRAIN
TEMP	TEMPORARY
THD	THREAD(ED)
THK	THICK(NESS)
THRU	THROUGH
TMS	THE MASONRY SOCIETY
TOC	TOP OF CONCRETE
TOG	TOP OF GRADE
TOM	TOP OF MASONRY
TOS	TOP OF STEEL
TOW	TOP OF WALL
TRANS	TRANSVERSE
TYP	TYPICAL
UNO	UNLESS NOTED OTHERWISE
VAR	VARIES
VERT	VERTICAL
VNR	VENEER
VR	VAPOR RETARDER
W	WEST OR WIDE (WIDTH) OR WIDE FLANGE SHAPE
W/	WITH
W/O	WITHOUT
WH	WEEP HOLE
WL	WIND LOAD
WLD	WELD(ED)
WP	WORKING POINT
WS	WATERSTOP
WT	WEIGHT OR WIDE FLANGE TEE SHAPE
WWR	WELDED WIRE REINFORCEMENT
X	EXTRA STRONG
XX	DOUBLE EXTRA STRONG

GEORGIA REGISTERED No. SE001521 STRUCTURAL ENGINEER ALEX GRIFFIN

Alexander Griffin
Expires 2025.12.31
2024.06.26 11:30:39-05'00'

no.	date	by	ckd	description
0	06/26/24	SVW	AMG	ISSUED FOR CONSTRUCTION

BURNS McDONNELL
4004 SUMMIT BLVD. NE, SUITE 1200
ATLANTA, GA 30319
770-587-4776
LICENSEE NO. PEF000100
AUTHORIZATION NO. J550903

date	detailed
MARCH 30, 2021	S. WINGARD
designed	**checked**
S. WINGARD	J. KIENHOLZ

Perry
HOUSTON COUNTY, GEORGIA

EAST PERRY WWTF
STRUCTURAL ABBREVIATIONS AND LEGEND

project	contract
148538	

drawing **100S001** – rev. **0**
sheet of sheets
file

STRUCTURAL GENERAL NOTES

1. THESE NOTES, AND OTHER DRAWING NOTES CONTAINED WITHIN, ARE PROVIDED TO MEET SPECIFIC REQUIREMENTS AND TO SUPPLEMENT THE CONTRACT SPECIFICATIONS. THESE NOTES NEITHER REPLACE NOR OVERRIDE THE PROVISIONS AND REQUIREMENTS OF THE CONTRACT SPECIFICATIONS.
2. COORDINATE ALL STRUCTURAL WORK WITH WORK SHOWN ON ALL OTHER DRAWINGS.
3. VERIFY ALL DIMENSIONS OF EXISTING CONSTRUCTION AND REPORT ANY DISCREPANCIES FROM THE CONTRACT OR REFERENCE DRAWINGS TO THE ENGINEER PRIOR TO COMMENCING WITH WORK. IN NO CASE SHALL WORKING DIMENSIONS BE SCALED FROM THE STRUCTURAL DRAWINGS.
4. THE CONTRACT DRAWINGS AND SPECIFICATIONS REPRESENT THE FINISHED STRUCTURE. CONTRACTOR SHALL BE RESPONSIBLE FOR MEANS AND METHODS OF CONSTRUCTION INCLUDING, BUT NOT LIMITED TO, SHORING AND TEMPORARY BRACING TO PROVIDE STRUCTURAL STABILITY DURING CONSTRUCTION.
5. IF CERTAIN FEATURES ARE NOT FULLY SHOWN OR CALLED FOR ON THE CONTRACT DRAWINGS OR SPECIFICATIONS, THEIR CONSTRUCTION SHALL BE OF THE SAME CHARACTER AS FOR SIMILAR CONDITIONS THAT ARE SHOWN OR CALLED FOR, WITH THE APPROVAL OF THE ENGINEER. WHERE SECTIONS VARY, CONTRACTOR SHALL PROVIDE FOR SMOOTH TRANSITIONS BETWEEN THEM, UNLESS NOTED OTHERWISE.
6. ALL PRODUCTS SHALL BE INSTALLED IN ACCORDANCE WITH THE MANUFACTURERS WRITTEN INSTRUCTIONS AND RECOMMENDATIONS, UNLESS NOTED OTHERWISE.

STRUCTURAL DESIGN LOADING/CRITERIA

1. STRUCTURAL DESIGN WAS PREPARED USING THE FOLLOWING CODES AND DATA:
   A. INTERNATIONAL BUILDING CODE, 2018 EDITION WITH GEORGIA STATE AMENDMENTS.
   B. ACI318 BUILDING CODE REQUIREMENTS FOR STRUCTURAL CONCRETE
   C. ACI350 BUILDING CODE REQUIREMENTS FOR ENVIRONMENTAL ENGINEERING CONCRETE STRUCTURES
   D. ASCE 7, MINIMUM DESIGN LOADS FOR BUILDINGS AND OTHER STRUCTURES, 2016 EDITION
2. SEE BUILDING LOAD PLAN SHEETS WHERE LOAD INDICATES 'VARIES'.
3. RISK CATEGORY: III (TYPICAL FOR ALL STRUCTURES WITHIN PROJECT SCOPE.)
4. DEAD LOADS
   A. SELF WEIGHT OF MATERIALS OF CONSTRUCTION
   B. WEIGHT OF FIXED SERVICE EQUIPMENT
      a. AS INDICATED ON THE STRUCTURAL DRAWINGS FOR EQUIPMENT WEIGHING IN EXCESS OF 300 LBS. FRAMING AND FOUNDATIONS ARE DESIGNED FOR EQUIPMENT WHICH SATISFIES THE CONTRACT SPECIFICATIONS.
      b. IF EQUIPMENT FURNISHED IS HEAVIER THAN THE WEIGHTS INDICATED, OR REQUIRES STRUCTURAL CHANGES FOR ANY OTHER REASON, PROVIDE ENGINEERING DESIGN CALCULATIONS AND ADDITIONAL STRUCTURAL WORK NECESSARY TO SUPPORT ALL LOADS IN ACCORDANCE WITH THE DESIGN STANDARDS SPECIFIED ABOVE, AT NO ADDITIONAL COST TO THE OWNER AND WITH NO INCREASE IN CONTRACT TIME.
   C. EQUIPMENT LOAD..... VARIES
5. LIVE LOADS.....150 PSF UNO
6. SNOW LOADS:
   A. SNOW LOAD IMPORTANCE FACTOR (I_S)..... 1.1
   B. GROUND SNOW LOAD (P_g)..... 5 PSF
7. WIND DESIGN DATA:
   A. ULTIMATE DESIGN WIND SPEED (V_{ult})..... 117 MPH
   B. NOMINAL DESIGN WIND SPEED (V_{asd})..... 91 MPH
   C. EXPOSURE CATEGORY..... C
   D. INTERNAL PRESSURE COEFFICIENT..... VARIES
      a. COMPONENTS AND CLADDING LOADS.....VARIES
8. SEISMIC DESIGN DATA:
   A. SEISMIC IMPORTANCE FACTOR (I_e)..... 1.25
   B. MAPPED SPECTRAL RESPONSE PARAMETERS:
      a. S_S.....0.151
      b. S_1..... 0.072
   C. SOIL SITE CLASS.....E
   D. DESIGN SPECTRAL RESPONSE PARAMETERS:
      a. S_{DS}..... 0.241
      b. S_{D1}..... 0.201
   E. SEISMIC DESIGN CATEGORY..... B
   F. BASIC SEISMIC FORCE RESISTING SYSTEM(S).....VARIES
   G. DESIGN BASE SHEARS(S)..... VARIES
   H. SEISMIC RESPONSE COEFFICIENT(S) (C_S)..... VARIES
   I. RESPONSE MODIFICATION COEFFICIENT(S) (R).... VARIES
   J. ANALYSIS PROCEDURE USED..... VARIES
9. ROOF RAIN LOAD DATA
   A. 60 MIN RAIN INTENSITY (i)..... 4.27 (IN/HR)
   B. 15 MINUTE RAIN INTENSITY (i)..... 8.48 (IN/HR)
10. GEOTECHNICAL DATA
   A. DESIGN LOAD BEARING VALUE..... VARIES
11. FLOOD DESIGN DATA:
   A. CONSTRUCTION SITE NOT IN FLOOD ZONE.

GRATING

1. METAL GRATING AND STAIR TREADS SHALL CONFORM TO THE "METAL BAR GRATING MANUAL" OF THE NATIONAL ASSOCIATION OF ARCHITECTURAL METAL MANUFACTURERS. GRATING AND STAIR TREADS SHALL BE ALUMINUM I-BAR SHAPE WITH SWAGE LOCKED CROSS BARS SPACED AT 4" OC. GRATING SHALL BE 1 1/2" DEEP UNLESS NOTED OTHERWISE ON THE DRAWINGS. STAIR TREADS UP TO 3'-6" WIDE SHALL BE 1 1/2" DEEP WITH CAST NOSING. TOP SURFACE OF GRATING AND TREADS SHALL BE GROOVED FOR SLIP RESISTANCE.
2. REFER TO SPECIFICATION SECTION 05 45 00 FOR ADDITIONAL DESIGN REQUIREMENTS.

GEOTECHNICAL INFORMATION

1. GEOTECHNICAL INFORMATION PROVIDED ON THESE DRAWINGS IS A SUMMARY OF THE INFORMATION PROVIDED IN THE PROJECT GEOTECHNICAL REPORT AND IS USED AS THE BASIS OF FOUNDATION DESIGN.
2. THE FOUNDATION DESIGN ASSUMES THAT THE SITE AND SUBGRADE HAVE BEEN PREPARED AND TESTED IN ACCORDANCE WITH THE RECOMMENDATIONS PROVIDED ON THE CONTRACT DRAWINGS AND IN THE CONTRACT SPECIFICATIONS. IN ADDITION, THE PROJECT GEOTECHNICAL REPORT WILL BE PROVIDED UPON REQUEST.
3. PROJECT GEOTECHNICAL REPORT:
   A. REPORT TITLE: SUBSURFACE INVESTIGATION EAST PERRY WWTF
   B. PROJECT NO.: 2023040
   C. ISSUED DATE: SEPTEMBER 12, 2023
   D. PREPARED BY: PRESTON GEOTECHNICAL CONSULTANTS
4. SITE & SUBGRADE PREPARATION
   A. PROVIDE EXCAVATION, FILL AND BACKFILL IN ACCORDANCE WITH CONTRACT DRAWINGS AND SPECIFICATIONS, DIVISION 31.
   B. NOTIFY ENGINEER WHEN LOOSE OR SOFT SOILS ARE EXPOSED WHERE SLABS, MATS, OR FOOTINGS ARE TO BE PLACED SO THAT A DETERMINATION MAY BE MADE REGARDING IMPROVEMENT OF THIS POTENTIALLY UNDESIRABLE CONDITION.
5. SOIL CHARACTERISTICS
   A. UNIT WEIGHT..... 117 PCF
   B. FROST DEPTH..... 18 INCHES
   C. WATER TABLE DEPTH..... 18 FT
6. DRAINED LATERAL EARTH PRESSURES (AS EQUIVALENT FLUID PRESSURES)
   A. AT-REST CONDITION, K_o..... 62 PCF
   B. ACTIVE CONDITION, K_a..... 42 PCF
   C. PASSIVE CONDITION, K_p..... 352 PCF
7. SHALLOW FOUNDATIONS - DESIGN PARAMETERS
   A. MODULUS OF SUBGRADE REACTION..... VARIES
   B. COEFFICIENT OF FRICTION..... VARIES

RAILINGS AND HANDRAILS

1. HANDRAILS AND RAILINGS SHALL BE ALUMINUM CONSTRUCTION WITH CONCEALED FASTENERS DESIGNED TO MEET IBC LOADING REQUIREMENTS.
2. RAILS AND POSTS:
   A. CONFORM TO ASTM B221 OR B429.
   B. 1-1/2-INCH NOMINAL DIAMETER (1.9-INCH OD), ALUMINUM ALLOY 6105-T5 WITH CLEAR ANODIZED FINISH ALUMINUM ASSOCIATION DESIGNATION M32-C22-A41 (215-R1). PIPE SCHEDULE SHALL BE AS REQUIRED BY DESIGN BUT SHALL BE NOT LESS THAN SCHEDULE 40.
   C. PROVIDE LINEAR EXPANSION JOINTS A MAXIMUM OF 40'-0" OC.
3. FITTINGS AND ACCESSORIES:
   A. FASTENERS AND ANCHORS OF STAINLESS STEEL AND OF TYPE AS REQUIRED BY SUBSTRATE.
4. TOE BOARD (KICK PLATE):
   A. TOE BOARD SHALL CONFORM TO OSHA STANDARDS. TOE BOARD SHALL BE A MINIMUM OF 4" HIGH AND SHALL BE AN EXTRUSION THAT ATTACHES TO THE POSTS WITH CLAMPS THAT WILL ALLOW FOR EXPANSION AND CONTRACTION BETWEEN POSTS. TOE BOARDS SHALL BE SET 1/4" ABOVE THE WALKING SURFACE. TOE BOARDS SHALL BE PROVIDED ON ALL HANDRAILS AND GUARDRAILS. TOE BOARDS SHALL BE SHIPPED IN STOCK LENGTHS FOR FIELD INSTALLATION.
   B. REFER TO SPECIFICATION SECTION 05 45 00 FOR ADDITIONAL DESIGN REQUIREMENTS.

STRUCTURAL ALUMINUM

1. ALL DESIGN, FABRICATION, AND ERECTION SHALL BE DONE IN ACCORDANCE WITH THE LATEST EDITION OF THE ALUMINUM ASSOCIATION ALUMINUM DESIGN MANUAL SPECIFICATIONS, THE AWS CODE, AND THE OSHA STANDARDS.
2. STRUCTURAL SHAPES: ASTM B308, ALLOY 6061 T6
   SHEET AND PLATE: ASTM B209, ALLOY 6061 T6
3. UNLESS NOTED OTHERWISE, PRIMARY BOLTED CONNECTIONS SHALL BE BEARING TYPE USING 316 STAINLESS STEEL BOLTS CONFORMING TO ASTM F593 WITH NUTS CONFORMING TO ASTM F594. SIZE OF BOLTS SHALL BE 3/4"Ø UNLESS OTHERWISE NOTED ON THE DRAWINGS AND SHALL HAVE ONE PLAIN HARDENED WASHER AND ONE LOAD INDICATOR WASHER. BOLT AND NUT THREADS SHALL BE LUBRICATED.
4. WELDS SHALL COMPLY WITH AWS D1.2 WITH FILLER ALLOY TYPE 4043
5. MINIMUM BOLT HOLE EDGE DISTANCE SHALL BE MAINTAINED PER AA ADM.
6. SUBSTITUTIONS OF SPECIFIED MEMBER SIZE OR CHANGE IN DETAILS OR DIMENSIONS OF ANY KIND SHALL NOT BE PERMITTED WITHOUT PRIOR WRITTEN APPROVAL OF THE ENGINEER.
7. FIELD CUTTING IS NOT PERMITTED EXCEPT BY THE SPECIFIC APPROVAL OF THE FIELD ENGINEER.
8. ALL ALUMINUM SURFACES IN CONTACT WITH CONCRETE SHALL HAVE A BITUMASTIC COATING.
9. REFER TO SPECIFICATION SECTION 05 45 00 FOR ADDITIONAL DESIGN REQUIREMENTS.

FIBER REINFORCED POLYMER (FRP) PLANKS AND FRAMING

1. THE FRP PLANKS, FRAMING AND STAIRS ARE A DELEGATED DESIGN. DESIGN SHALL BE PERFORMED IN ACCORDANCE WITH THE CODES SPECIFIED ON THE CONTRACT DOCUMENTS AND SEALED BY A STRUCTURAL ENGINEER REGISTERED IN THE STATE OF GEORGIA.
2. TOP SURFACE OF ALL PLANKS SHALL HAVE A MECHANICALLY ADHERED NON-SKID GRIT SURFACE.
3. STAIR TREADS SHALL HAVE A SKID RESISTANT NOSING.
4. ALL FIELD CUT EDGES OF FRP PRODUCTS SHALL BE SMOOTH AND SEALED WITHA CATALYZED RESIN OF EQUAL OR SUPERIOR CORROSION RESISTANCE TO THE MANUFACTURED PRODUCT.
5. REFER TO SPECIFICATION SECTION 06 70 00 FOR ADDITIONAL DESIGN REQUIREMENTS.

CHECKERED PLATE

1. METAL CHECKERED PLATE SHALL BE ALUMINUM ALLOY 6061 T6, BRIGHT FINISH TOP.
2. REFER TO SPECIFICATION SECTION 05 45 00 FOR ADDITIONAL DESIGN REQUIREMENTS.

SPECIAL INSPECTION REQUIREMENTS

MATERIAL/SYSTEM	TYPE & EXTENT OF SPECIAL INSPECTION	CONT/PERIODIC INSPECTION	TYPE & EXTENT OF TESTING	CODE REFERENCE
SUBGRADE PREPERATION	VERIFY DEPTH, MATERIALS AND COMPACTION	P	DENSITY TEST ON COMPACTED FILL, PROOFROLL UNDISTRUBED NATIVE MATERIAL	
MATERIAL VERIFICATION OF HIGH-STRENGTH BOLTS	IDENTIFICATION OF ASTM MARKINGS MFR'S CERTIFICATE OF COMPLIANCE			ASTM A325, AISC 360 -SECTION A3.3
HIGH-STRENGTH BOLTING	VISUAL INSPECTION, PRE-TENSIONING	P		AISC 360, SECTION M2.5
MATERIAL VERIFICATION OF STRUCTURAL STEEL	IDENTIFICATION OF ASTM MARKINGS, MILL TEST REPORTS			ASTM A6 OR ASTM A568
MATERIAL VERIFICATION OF WELD FILLER MAT'LS	IDENTIFICATION OF AWS MARKINGS, MFR'S CERTIFICATE OF COMPLIANCE			AISC 360, SECTION A3.5
CJP AND PARTIAL PEN GROOVE WELDS	VISUAL INSPECTION	C		AWS D1.1
MULIT-PASS FILLET WELDS	VISUAL INSPECTION	C		AWS D1.1
SINGLE PASS FILLET WELDS> 5/16"	VISUAL INSPECTION	C		AWS D1.1
SINGLE PASS FILLET WELDS<= 5/16"	VISUAL INSPECTION	P		AWS D1.1
STEEL FRAME JOINT DETAILS	DETAILS OF BRACING, STIFFENING, ETC. MEMBER LOCATIONS, APPLICATION OF STD JOINT DETAILS	P		
MATERAIL VERIFICATION OF COLD-FORMED STEEL DECK	IDENTIFICATION OF ASTM MARKINGS, MFR'S CERTIFICATE OF COMPLIANCE			ASTM
COLD-FORMED ROOF DECK WELDS	VISUAL INSPECTION	P		AWS D1.3
SEISMIC-FORCE-REISTING SYSTEM	VISUAL INSPECTION OF SINGLE PASS FILLET WELDS OVER 5/16"	C		AISC 341
CONCRETE FORM WORK	SHAPE, LOCATION, AND DIMENSIONS OF CONCRETE MEMBER	P		
REINFORCEMENT	SIZE AND PLACEMENT	P		ACI 318
CONCRETE MIX DESIGN	VERIFICATON OF PROPERTIES	P		ACI 318
CAST-IN-PLACE CONCRETE	PLACEMENT OF CONCRETE	C	TEMPERATURE, STRENGTH, SLUMP, AIR ENTRAINMENT	ACI 318
CONCRETE CURING	MAINTENANCE OF CURING TEMPURATURE AND TECHNIQUES	P		ACI 318
ANCHORS CAST IN CONCRETE	SIZE AND PLACEMENT	P		ACI 318
ANCHORS POST INSTALLED IN HARDENED CONCRETE	SIZE, PLACEMENT, AND CONFORMANCE TO MFR'S INSTALLATION PROCEDURES	C		ACI 318
PREMIXED MORTAR AND GROUT	VERIFICATION OF PROPERTIES	P		ACI 530
SITE PREPARED MORTAR AND GROUT	VERIFICATION OF PROPERTIES	P		ACI 530
GROUT	GROUT SPACE PRIOR TO GROUT, PLACEMENT OF GROUT	C		ACI 530

NOTES:

1. STATEMENT OF SPECIAL INSPECTIONS AND TESTING REQUIREMENTS
   A. THIS "STATEMENT OF SPECIAL INSPECTIONS" HAS BEEN PREPARED IN ACCORDANCE WITH IBC 2018, SECTION 1704.
   B. OWNER SHALL RETAIN PRE-COORDINATED AND GOVERNMENT-APPROVED THIRD-PARTY QUALITY ASSURANCE AGENCIES TO PROVIDE SPECIAL INSPECTIONS DURING CONSTRUCTION IN ACCORDANCE WITH IBC REQUIREMENTS.
   C. EACH SPECIAL INSPECTOR SHALL BE A QUALIFIED PERSON WHO SHALL DEMONSTRATE COMPETENCE, TO THE SATISFACTION OF THE CONTRACTING OFFICER'S REPRESENTATIVE, FOR INSPECTION OF THE PARTICULAR TYPE OF CONSTRUCTION OR OPERATION REQUIRING SPECIAL INSPECTION.
   D. SPECIAL INSPECTION AGENCY SHALL SUBMIT INSPECTION REPORTS DURING CONSTRUCTION FOR VERIFICATION, INCLUDING FINAL REPORTS IN ACCORDANCE WITH IBC SECTION 1704.2.4.
   E. SPECIAL INSPECTOR SHALL USE THE LATEST ISSUE OF THE STRUCTURAL DRAWINGS FOR ALL INSPECTIONS. SHOP FABRICATION DRAWINGS SHALL NOT BE USED FOR SUCH PURPOSES.
   F. THE TABLE ON THIS SHEET IDENTIFIES THE MATERIALS, SYSTEMS, AND COMPONENTS FOR WHICH SPECIAL INSPECTION IS REQUIRED.
   G. CONTRACTOR SHALL RETAIN PRE-COORDINATED AND GOVERNMENT-APPROVED THIRD-PARTY TESTING AGENCIES TO PROVIDE STRUCTURAL TESTING DURING CONSTRUCTION IN ACCORDANCE WITH IBC REQUIREMENTS.
   H. TESTING AGENCY SHALL SUBMIT TEST RESULTS DURING CONSTRUCTION FOR VERIFICATION INCLUDING A FINAL REPORT IN ACCORDANCE WITH IBC SECTION 1704.2.4.
   I. THE TABLE ON THIS SHEET IDENTIFIES THE STRUCTURAL TESTS REQUIRED FOR THIS PROJECT.
2. STRUCTURAL OBSERVATIONS
   A. A REGISTERED DESIGN PROFESSIONAL SHALL PROVIDE STRUCTURAL OBSERVATIONS DURING CONSTRUCTION IN ACCORDANCE WITH IBC REQUIREMENTS.
   B. THE STRUCTURAL OBSERVER SHALL VISUALLY OBSERVE REPRESENTATIVE LOCATIONS OF STRUCTURAL SYSTEMS, DETAILS AND LOAD PATHS FOR GENERAL CONFORMANCE TO THE APPROVED CONSTRUCTION DOCUMENTS.
   C. CONTRACTOR SHALL COORDINATE SCHEDULED WORK BELOW WITH ENGINEER.
   D. STRUCTURAL OBSERVATIONS SHALL INCLUDE, BUT ARE NOT LIMITED TO:
      a. SOLIDS HANDLING BUILDING: PRE-ENGINEERED METAL BUILDING
      b. PROCESS BUILDING: PRE-ENGINEERED METAL BUIDLING
      c. PROCESS BASIN AND SOLIDS HOLDING BASIN: EXTERIOR REINFORCED CONCRETE WALLS
   E. FREQUENCY: PERIODIC

GEORGIA REGISTERED No. SE001521 STRUCTURAL ENGINEER ALEX GRIFFIN

Alexander Griffin
Expires 2025.12.31
2024.06.26 11:31:13-05'00'

no.	date	by	ckd	description
0	06/26/24	SVW	AMG	ISSUED FOR CONSTRUCTION

BURNS McDONNELL
4004 SUMMIT BLVD. NE, SUITE 1200
ATLANTA, GA 30319
770-587-4776
LICENSEE NO. PEF000100
AUTHORIZATION NO. J550903

date	detailed
APRIL 4, 2023	N. KROUSS
designed	**checked**
A. GRIFFIN	J. KIENHOLZ

Perry
HOUSTON COUNTY, GEORGIA

EAST PERRY WWTF
STRUCTURAL GENERAL NOTES AND SPECIAL INSPECTIONS

project	contract
148538	

drawing **100S002** – rev. **0**
sheet of sheets
file

REINFORCED CAST-IN-PLACE CONCRETE

1. ALL CONCRETE SHALL BE PREPARED AND PLACED IN ACCORDANCE WITH ACI MANUAL OF CONCRETE PRACTICE, ACI 318 & ACI 350 AS MODIFIED BY CONTRACT DOCUMENTS.
2. ALL CONCRETE SHALL MEET THE FOLLOWING REQUIREMENTS (UNO):
   - MINIMUM 28-DAY COMPRESSIVE STRENGTH f'_c: 4,500 PSI
   - NORMALWEIGHT CONCRETE SHALL BE USED
3. DO NOT AIR-ENTRAIN CONCRETE USED FOR INTERIOR SLABS WITH A TROWEL FINISH.
4. BEFORE CONCRETE WORK BEGINS, THE PROPOSED CONCRETE MIX DESIGN, ALONG WITH COLLABORATING DATA SHOWING COMPLIANCE WITH PROJECT REQUIREMENTS, SHALL BE SUBMITTED FOR APPROVAL.
5. REFER TO SPECIFICATION SECTION 03 30 00 FOR ADDITIONAL REQUIREMENTS.

REINFORCING STEEL

1. ALL REINFORCING BARS SHALL BE ASTM A615, GRADE 60.
2. WELDED WIRE FABRIC SHALL CONFORM TO ASTM A1064 AND SHALL BE FLAT SHEET. ROLLED FABRIC WILL NOT BE ALLOWED.
3. REINFORCE ALL CONCRETE UNLESS SPECIFICALLY MARKED "NOT REINFORCED" OR "UNREINFORCED".
4. DETAIL AND PLACE REINFORCEMENT IN ACCORDANCE WITH ACI SP-66, ACI 301, ACI 318 AND CRSI MANUAL OF STANDARD PRACTICE.
5. DO NOT INSERT REINFORCEMENT INTO FRESH OR PARTIALLY HARDENED CONCRETE.
6. THE FOLLOWING CONCRETE COVER SHALL BE PROVIDED FOR REINFORCEMENT (UNLESS OTHERWISE NOTED). SEE ACI 117 FOR CONSTRUCTION TOLERANCES:
   A. CONCRETE CAST AGAINST AND PERMANENTLY EXPOSED TO EARTH..... 3"
   B. CONCRETE EXPOSED TO EARTH, LIQUID, WEATHER OR CAST AGAINST A CONCRETE WORK MAT:
      a. SLABS, WALLS & FOOTINGS..... 2"
      b. BEAMS & COLUMNS:
         - STIRRUPS, SPIRALS & TIES..... 2"
         - PRIMARY REINFORCEMENT..... 2 1/2"
   C. CONDITIONS NOT COVERED IN "A" OR "B":
      a. SLABS AND WALLS..... 1 1/2"
      b. BEAMS AND COLUMNS:
         - STIRRUPS, SPIRALS & TIES..... 1 1/2"
         - PRIMARY REINFORCEMENT..... 2"
7. THE MINIMUM LENGTH OF LAP SPLICES AND EMBEDMENT SHALL BE AS NOTED IN THE TABLES AND DETAILS ON THE CONTRACT DRAWINGS.
8. HEATING OF REINFORCING BARS SHALL NOT BE ALLOWED.
9. PROVIDE ADDITIONAL REINFORCEMENT AT OPENINGS AND CORNER BARS AT WALLS GRADE BEAMS AND CURBS IN ACCORDANCE WITH DETAILS PROVIDED ON THE CONTRACT DOCUMENTS.
10. REPOSITIONING OF REINFORCING TO AVOID INTERFERENCE WITH EMBEDDED ITEMS SHALL BE APPROVED BY THE ENGINEER PRIOR TO WORK.
11. REFER TO SPECIFICATION SECTION 03 20 00 FOR ADDITIONAL REQUIREMENTS.

CONCRETE FORMWORK

1. CONTRACTOR IS RESPONSIBLE FOR DESIGN, ENGINEERING, STRUCTURAL ADEQUACY AND CONSTRUCTION OF CONCRETE FORMWORK IN ACCORDANCE WITH CONTRACT SPECIFICATIONS.
2. COORDINATE CONCRETE WORK WITH PLACEMENT OF PIPING, INSERTS, FLOOR DRAINS AND OTHER EMBEDDED ITEMS INDICATED ON CONTRACT DRAWINGS OR IN CONTRACT SPECIFICATIONS.
3. SLEEVE NEW OR EXISTING PIPING OR UTILITIES PASSING THROUGH NEW CONCRETE, UNLESS NOTED OTHERWISE. SEE OTHER DISCIPLINE DRAWINGS FOR SLEEVE DETAILS. ENSURE SLEEVES REMAIN FREE OF DEBRIS AND WATER DURING CONSTRUCTION.
4. ALL EXPOSED CORNERS SHALL BE CHAMFERED 3/4", UNO.
5. REFER TO SPECIFICATION SECTION 03 10 00 FOR ADDITIONAL REQUIREMENTS.

CONCRETE JOINTS

1. LOCATE JOINTS AS INDICATED IN STANDARD DETAILS, AS SPECIFIED ON THE DRAWINGS OR AS APPROVED BY THE ENGINEER PRIOR TO PLACEMENT OF CONCRETE.
2. PRIOR TO PLACING NEW CONCRETE CLEAN CONSTRUCTION JOINT SURFACES OF LAITANCE. IMMEDIATELY BEFORE PLACING NEW CONCRETE WET SURFACE AND REMOVE ANY STANDING WATER.
3. INTENTIONALLY ROUGHEN SURFACE OF JOINTS AS SPECIFIED ON THE CONTRACT DOCUMENTS.
4. PROVIDE WATERSTOPS AT CONCRETE JOINTS WHERE INDICATED.

POST-INSTALLED ANCHORS

1. POST INSTALLED CONCRETE ANCHOR MANUFACTURERS AND ADHESIVES FOR POST INSTALLED REINFORCING BARS SHALL BE PROVIDED AND INSTALLED PER SPECIFICATION 05 05 19.
2. ANCHOR CAPACITY IS DEPENDENT UPON SPACING BETWEEN ADJACENT ANCHORS AND PROXIMITY OF ANCHORS TO EDGE OF CONCRETE. INSTALL ANCHORS IN ACCORDANCE WITH SPACING AND EDGE CLEARANCES INDICATED ON THE DRAWINGS.
3. EXISTING REINFORCING BARS IN THE CONCRETE STRUCTURE MAY CONFLICT WITH SPECIFIC ANCHOR LOCATIONS. REINFORCING BARS SHALL NOT BE CUT UNLESS NOTED ON THE DRAWINGS THAT THE BARS CAN BE CUT. CONTRACTOR SHALL CONTACT THE ENGINEER OF RECORD WHEN INTERFERENCES OCCUR.
4. ADHESIVE ANCHORS SHALL BE INSTALLED IN CONCRETE HAVING A MINIMUM AGE OF 21 DAYS AT TIME OF ANCHOR INSTALLATION. APPROVAL OF THE ENGINEER OF RECORD IS REQUIRED FOR INSTALLATIONS IN CONCRETE LESS THAN 21 DAYS OF AGE.
5. REFER TO SPECIFICATION SECTION 05 05 19 FOR ADDITIONAL DESIGN REQUIREMENTS.

CONCRETE REINFORCEMENT SPLICE AND EMBEDMENT TABLE (ACI 318-14, f'c = 4000 PSI)					
BAR SIZE	SPLICES (IN)		DEVELOPEMENT LENGTH (IN)		
	TOP BARS	OTHER BARS	TOP BARS	OTHER BARS	HOOKED BARS
3	16	12	12	12	6
4	21	16	16	13	8
5	26	20	20	16	9
6	31	24	24	19	11
7	51	40	40	31	13
8	65	50	50	39	15
9	80	61	61	47	17
10	98	75	75	58	19
11	116	90	90	69	21
14	NOT ALLOWED		121	93	35
18			192	148	46

REINFORCING SPLICE AND DEVELOPENT LENGTH TABLE NOTES:

1. REINFORCING BAR DEVELOPMENT LENGTH AND LAP SPLICE LENGTHS SHALL BE AS SHOWN IN THE ABOVE TABLE UNLESS NOTED OTHERWISE ON THE DRAWINGS.
2. THE LENGTHS SHOWN IN THE TABLE ARE BASED ON THE FOLLOWING CONCRETE COVERAGE AND REINFORCING C-C SPACING:
   A. BEAMS OR COLUMNS: COVER ≥ 1-1/2" CENTER TO CENTER (C-C)SPACING
   B.ALL OTHERS: COVER ≥ 1-1/2" CENTER TO CENTER SPACING
3. TOP BARS ARE DEFINED AS HORIZONTAL REINFORCEMENT PLACED SUCH THAT MORE THAN 12" OF FRESH CONCRETE IS CAST IN THE MEMBER BELOW THE DEVELOPMENT LENGTH OR SPLICE.
4. THE DEVELOPMENT AND SPLICE LENGTHS SHOWN SHALL NOT APPLY IF ANY OF THE FOLLOWING CONDITIONS OCCUR:
   A.f'c < 4000 psi
   B.fy > 60,000 psi
   C.THE COVER OR C-C BAR SPACING IS NOT AS LISTED ABOVE.
   D.THE REINFORCING STEEL IS EPOXY COATED.
   E.LIGHT WEIGHT CONCRETE IS USED.
5. WHERE BAR SPLICES ARE STAGGERED SUCH THAT ONE-HALF OR LESS OF TOTAL REINFORCEMENT IS SPLICED WITHIN REQUIRED LAP LENGTH, SPLICE LENGTH MAY EQUAL DEVELOPMENT LENGTH.

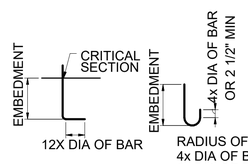

RADIUS OF HOOK:
4x DIA OF BAR - #3 TO #8 BARS
5x DIA OF BAR - #9 TO #11 BARS
6x DIA OF BAR - #14 & #18 BARS

LAP SPLICE TABLE
NOT TO SCALE

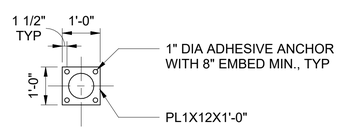

PLAN

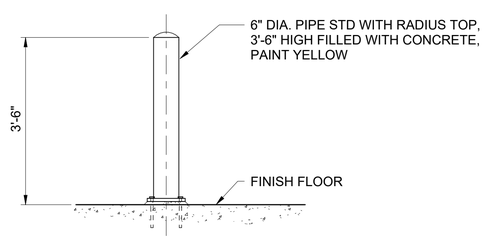

ELEVATION

TOP MOUNTED BOLLARD
NOT TO SCALE

BAR IDENTIFICATION

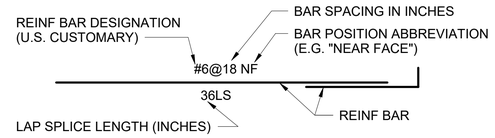

STANDARD 90° HOOK

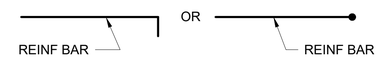

STANDARD 180° HOOK

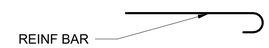

MECHANICAL SPLICE

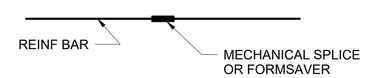

LAP SPLICE

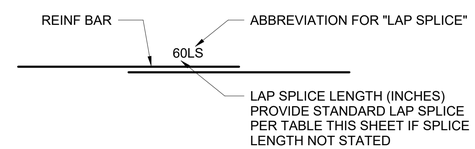

CONCRETE REINFORCING NOMENCLATURE
NOT TO SCALE

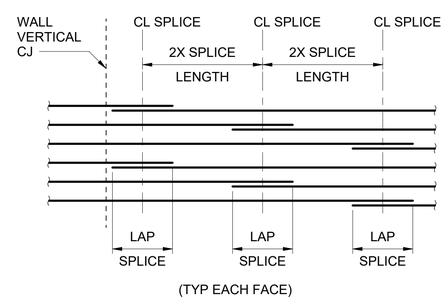

LAP SPLICE STAGGER DETAIL FOR WALL HORIZONTAL REINFORCING IN CIRCULAR TANKS
NOT TO SCALE

ANCHOR BOLTS

1. ANCHOR BOLTS SHALL CONFORM TO ASTM F1554 USING A36 STEEL.
2. ANCHOR BOLT GROUPS SHALL BE SUPPORTED AND SET USING A TEMPLATE WITH THE EMBEDDED PARTS SECURELY TIED TO PREVENT DISPLACEMENT DURING CONCRETE PLACEMENT. ANCHOR BOLTS SHALL BE INSTALLED PLUMB AND SHALL BE WITHIN 1/16" OF THE POSITION INDICATED ON THE DRAWINGS.
3. FIELD WELDING OF TEMPLATE TO REINFORCING, PIPE SLEEVES, OR ANCHOR BOLTS IS PROHIBITED.
4. INSERTING ANCHOR BOLTS OR DOWELS INTO FRESH OR PARTIALLY HARDENED CONCRETE IS PROHIBITED.

D = BOLT DIAMTER
K = THREADS (2D+3" SINGLE NUT)
= THREADS (3D+3" DOUBLE NUTS)
P = BOLT PROJECTION

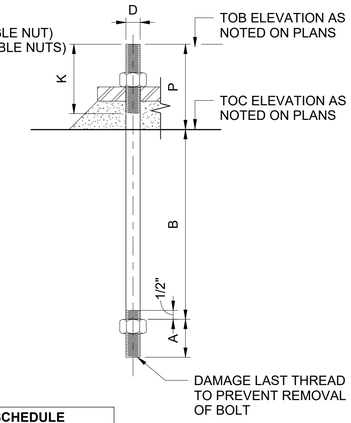

HEADED BOLT SCHEDULE			
D	A*	B	REMARKS
3/8"	2"	6"	
1/2"	2"	7"	
5/8"	2"	10"	
3/4"	2"	1'-0"	
7/8"	3"	1'-2"	
1"	3"	1'-4"	
1 1/8"	3"	1'-6"	
1 1/4"	3"	1'-8"	
1 3/8"	4"	1'-10"	
1 1/2"	4"	2'-0"	
1 3/4"	4"	2'-5"	
2"	4"	2'-10"	

NOTES:
1. * NOT REQUIRED FOR MACHINE BOLTS.
2. CONTRACTOR HAS OPTION OF USING HEADED MACHINE BOLTS IN LIEU OF THREADED RODS.
3. FULLY THREADED RODS ARE NOT PERMITTED.
4. MACHINE BOLTS SHALL CONFORM TO ASTM F1554, GRADE 36.

ANCHOR - TYPE VII HEADED
NOT TO SCALE

MINIMUM EMBEDMENT FOR EPOXY ADHESIVE ANCHORS UNO	
SIZE	EMBEDMENT
3/8"	3 1/2"
1/2"	4 1/2"
5/8"	5 5/8"
3/4"	6 3/4"
7/8"	7 7/8"
1"	9"
1 1/4"	11 1/4"

MINIMUM EMBEDMENT FOR WEDGE-TYPE ANCHORS	
SIZE	EMBEDMENT
1/4"	3"
3/8"	3 1/2"
1/2"	4 3/4"
5/8"	5 1/2"
3/4"	8"

NOTE:
EMBEDMENT SHOWN IS FOR ANCHORS & REBAR POST-INSTALLED INTO CONCRETE. FOR POST-INSTALLED ANCHORS INTO MASONRY, FOLLOW MANUFACTURER RECOMMENDATIONS.

POST-INSTALLED ANCHOR EMBEDMENT
NOT TO SCALE

GEORGIA REGISTERED No. SE001521 STRUCTURAL ENGINEER ALEX GRIFFIN

Alexander Griffin
Expires 2025.12.31
2024.06.26 11:31:29-05'00'

no.	date	by	ckd	description
0	06/26/24	SVW	AMG	ISSUED FOR CONSTRUCTION

BURNS McDONNELL
4004 SUMMIT BLVD. NE, SUITE 1200
ATLANTA, GA 30319
770-587-4776
LICENSEE NO. PEF000100
AUTHORIZATION NO. J550903

date	detailed
APRIL 4, 2023	N. KROUSS
designed	checked
S. WINGARD	J. KIENHOLZ

Perry
HOUSTON COUNTY, GEORGIA

EAST PERRY WWTF
STANDARD CONCRETE AND ANCHOR BOLT NOTES AND DETAILS

project	contract
148538	

drawing **100S501** – rev. **0**
sheet of sheets
file

no.	date	by	ckd	description
0	06/26/24	SVW	AMG	ISSUED FOR CONSTRUCTION

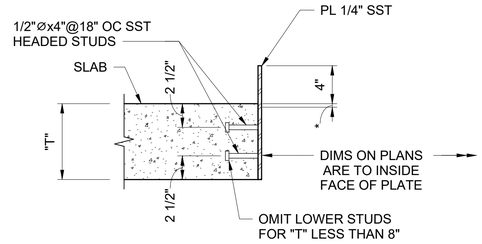

* COPE 3/8" AT STAIR LOCATIONS WITH ABRASIVE NOSING (CE-2)

CE-1 WITH KICK PLATE
CE-2 WITHOUT KICK PLATE

CE-1/CE-2
NOT TO SCALE

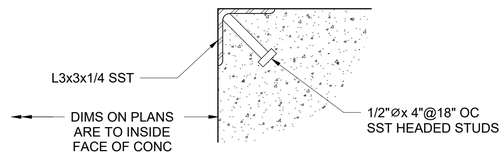

CE-3
NOT TO SCALE

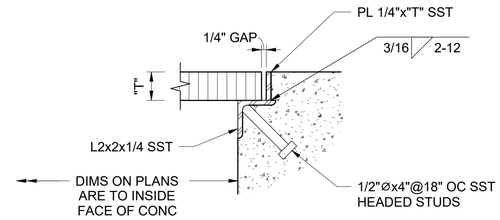

NOTE:
MITER, WELD, AND SMOOTH GRIND ANGLES AT ALL CORNERS.

CE-4
NOT TO SCALE

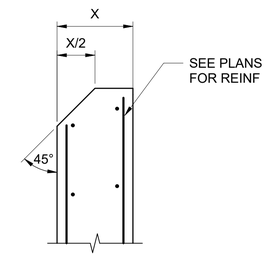

TYPICAL WALL CHAMFER AT WEIRS
NOT TO SCALE

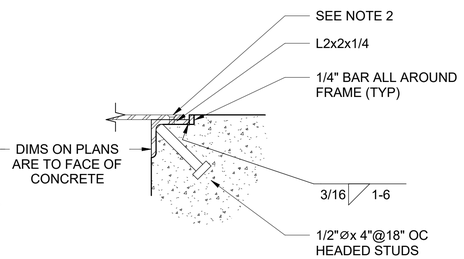

NOTES:
1. PLATE SECTION NOT TO EXCEED 8 SQ FT IN SIZE. PROVIDE TWO 3/4"Ø LIFTING HOLES IN EACH PLATE SECTION.
2. DRILL AND COUNTERSINK EACH CORNER OF EACH PLATE SECTION, DRILL AND TAP FRAME FOR 1/4"⌀ STAINLESS STEEL BOLTS.
3. EMBED SHALL BE SST UNO.

CE-6
NOT TO SCALE

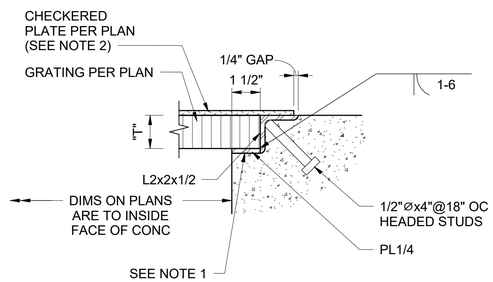

NOTES:
1. TRIM EDGE OF ANGLE TO ACCOMODATE GRATING THICKNESS.
2. DRILL AND TAP EACH CORNER OF EACH PLATE SECTION AND FRAME FOR 1/4"⌀ SST SCREWS.
3. EMBED SHALL BE SST UNO.

CE-7
NOT TO SCALE

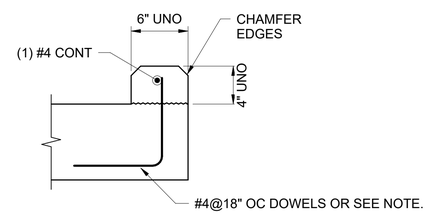

NOTES:
1. AT CONTRACTOR'S OPTION, DRILL AND EPOXY DOWELS WITH 4" MINIMUM DEPTH.

CE-8
NOT TO SCALE

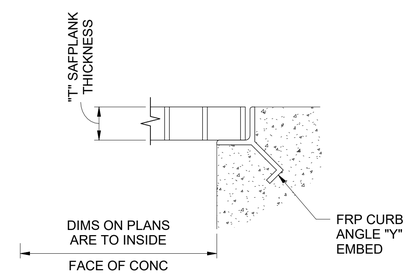

CE-9
NOT TO SCALE

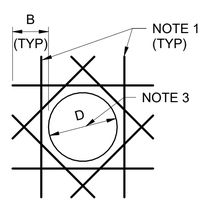

CO-1

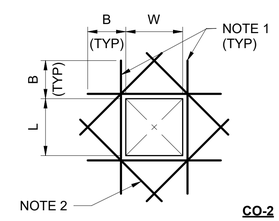

CO-2

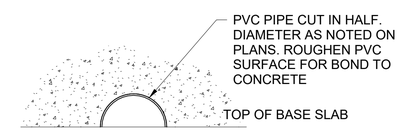

CO-16
NOT TO SCALE

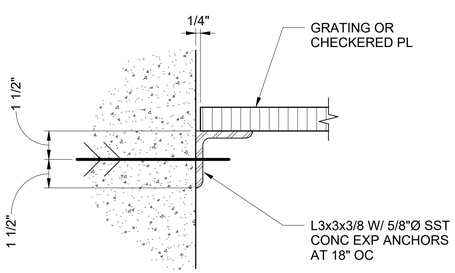

GS-1
NOT TO SCALE

OPENING REINFORCING NOTES:
1. ADD BARS EQUAL TO THE TOTAL AREA OF REGULAR REINFORCING CUT BY THE OPENING EACH MAT. PLACE ONE HALF TOTAL AREA EACH SIDE OF OPENING EACH MAT.
2. (1) #5 BAR x 3'-0" EACH CORNER EACH MAT FOR CONCRETE THICKNESS < 18"
   (1) #6 BAR x 4'-0" EACH CORNER EACH MAT FOR CONCRETE THICKNESS ≥ 18"
3. (4) #5 BARS x D + 12" @ 45° TO REGULAR REINFORCING EACH MAT FOR CONCRETE THICKNESS < 18"
   (4) #6 BARS x D + 12" @ 45° TO REGULAR REINFORCING EACH MAT FOR CONCRETE THICKNESS ≥ 18"
4. B = TOP BAR LAP SPLICE
5. CENTER ALL BARS ON OPENING.
6. FOR OPENINGS (W, L, D) LESS THAN 12" NO ADD BARS REQUIRED IF NO REGULAR REINFORCING IS CUT BY THE OPENING, OTHERWISE SEE NOTE 1.
7. REINFORCE OPENINGS WITH W, L, OR D LARGER THAN 54" AS INDICATED ON THE DRAWINGS. IF NOT INDICATED CONTACT THE ENGINEER.

CO-1/CO-2
NOT TO SCALE

GEORGIA REGISTERED No. SE001521 STRUCTURAL ENGINEER ALEX GRIFFIN

Alexander Griffin
Expires 2025.12.31
2024.06.26 11:31:46-05'00'

BURNS McDONNELL
4004 SUMMIT BLVD. NE, SUITE 1200
ATLANTA, GA 30319
770-587-4776
LICENSEE NO. PEF000100
AUTHORIZATION NO. J550903

date	detailed
APRIL 4, 2023	N. KROUSS
designed	**checked**
S. WINGARD	J. KIENHOLZ

Perry
HOUSTON COUNTY, GEORGIA

EAST PERRY WWTF
STANDARD CONCRETE DETAILS

project	contract
148538	

drawing 100S502 – **rev.** 0
sheet **of** **sheets**
file

no.	date	by	ckd	description
0	06/26/24	SVW	AMG	ISSUED FOR CONSTRUCTION

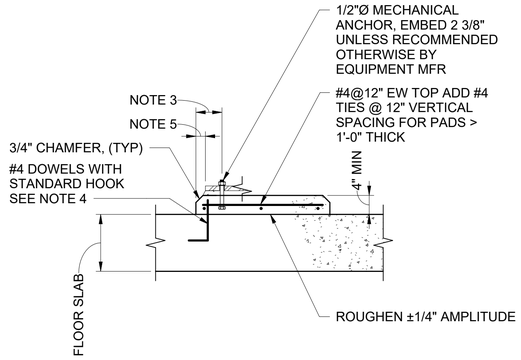

HOUSEKEEPING PAD GENERAL NOTES:

1. PROVIDE EP-1 EQUIPMENT PAD FOUNDATION FOR EQUIPMENT WHEN OTHER FOUNDATIONS HAVE NOT BEEN INDICATED.
2. GROUT EQUIPMENT BASE WITH NON-SHRINK GROUT IF RECOMMENDED BY MFR.
3. UNLESS NOTED OTHERWISE, DIMENSION SHALL BE 4" MINIMUM FOR PADS WITH ANCHORS ≤1"Ø, 6" MINIMUM FOR PADS WITH ANCHORS >1"Ø.
4. PROVIDE DOWELS @ CORNERS AND 18" MAXIMUM CENTER TO CENTER.
   A. DRILL AND EPOXY EMBED DOWELS INTO THE FLOOR SLAB WITH 5" MIN EMBEDMENT AT CONTRACTORS OPTION.
5. PROVIDE 2" MINIMUM CLEARANCE TO THE EDGE OF THE EQUIPMENT BASE.

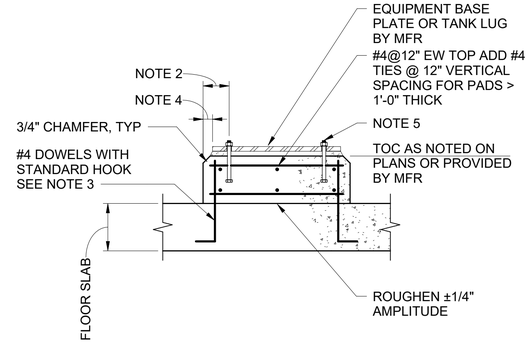

EQUIPMENT & TANK PAD NOTES:

1. EQUIPMENT SHALL BE GROUTED IN PLACE W/ NON-SHRINK GROUT, UNLESS OTHERWISE RECOMMENDED BY THE EQUIPMENT MFR.
2. DIMENSION SHALL BE 4" MINIMUM FOR PADS WITH ANCHORS ≤1"Ø, 6" MINIMUM FOR PADS WITH ANCHORS >1"Ø.
3. PROVIDE DOWELS @ 12" MAXIMUM CENTER TO CENTER.
   A. DRILL AND EPOXY EMBED DOWELS INTO THE FLOOR SLAB WITH 5" MIN EMBEDMENT AT CONTRACTORS OPTION.
4. PROVIDE 2" MINIMUM CLEARANCE TO THE EDGE OF THE EQUIPMENT BASE.
5. EQUIPMENT ANCHORS SHALL BE DESIGNED BY A PROFESSIONAL ENGINEER REGISTERED IN THE STATE OF GEORGIA. CALCULATIONS SHALL BE SUBMITTED FOR REVIEW.
6. FOR TANK PAD SUPPORTS COORDINATE LOCATION OF DRAIN BLOCKOUT IN PAD WITH TANK MFR.

EP-1: LIGHT LOAD EQUIPMENT PAD
NOT TO SCALE

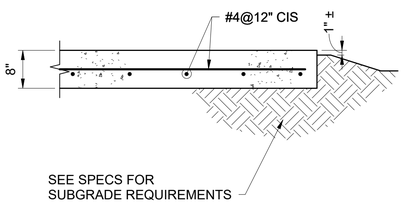

NOTES:

1. SLAB FOR SWITCHGEAR & MISC HVAC EQUIPMENT. SEE CIVIL DWGS FOR LOCATION. COORDINATE SIZE W/ EQUIPMENT MANUFACTURER.
2. PAD SHALL HAVE A LIGHT BROOM FINISH.
3. PROVIDE ISOLATION JOINT WHERE SLAB MEETS VERTICAL CONCRETE SURFACE.

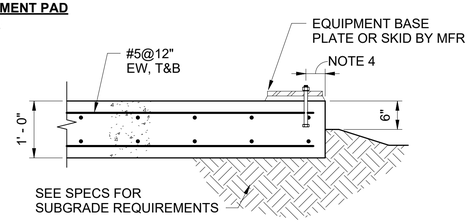

NOTES:

1. SEE CIVIL DRAWINGS FOR LOCATION. COORD DIMENSIONS WITH EQUIPMENT MANUFACTURER.
2. COORDINATE ADDITIONAL FOUNDATION REQUIREMENTS WITH EQUIPMENT MANUFACTURER.
3. GROUT IN PLACE WITH NON-SHRINK GROUT, UNLESS OTHERWISE RECOMMENDED BY THE EQUIPMENT MANUFACTURER.
4. EQUIPMENT ANCHOR BOLTS SHALL BE STANDARD TYPE VII ANCHOR BOLTS, UNLESS OTHERWISE RECOMMENDED BY THE EQUIPMENT MANUFACTURER. DIMENSION SHALL BE 4" MINIMUM FOR PADS WITH 1" DIAMETER ANCHOR BOLTS, 6" MINIMUM FOR PADS WITH ANCHOR BOLTS GREATER THAN 1" DIAMETER.
5. PROVIDE LIGHT BROOM FINISH.
6. PROVIDE ISOLATION JOINT WHERE PAD MEETS VERTICAL CONCRETE SURFACE.

EP-2: HEAVY LOAD EQUIPMENT PAD
NOT TO SCALE

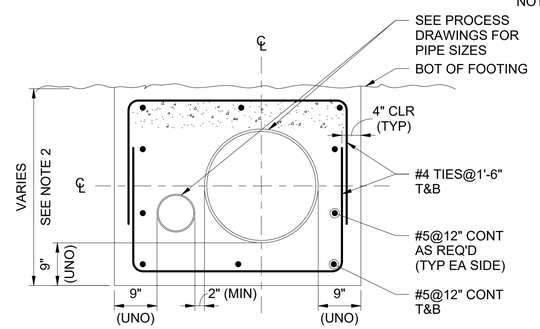

NOTES:

1. THIS DETAIL IS TYPICAL FOR BOTH HORIZONTAL AND VERTICAL RUNS OF PIPE.
2. ON VERTICAL RUNS, CONTINUE LONGITUDINAL REINFORCEMENT 6" INTO SLAB.
3. PIPE ENCASEMENT SHALL EXTEND 5'-0" BEYOND EXTENT OF STRUCTURE FOUNDATION UNLESS NOTED OTHERWISE.
4. PIPE ENCASEMENT MAY INCLUDE MULTIPLE PIPES WITHIN THE SAME HORIZONTAL PLANE. PROVIDE 2" MINIMUM SPACING BETWEEN PIPES.
5. WHERE THERE ARE MULTIPLE PIPES, MINIMUM DEPTH BASED ON LARGEST DIAMETER PIPE WITHIN ENCASEMENT.

TYP PIPE ENCASEMENT
NOT TO SCALE

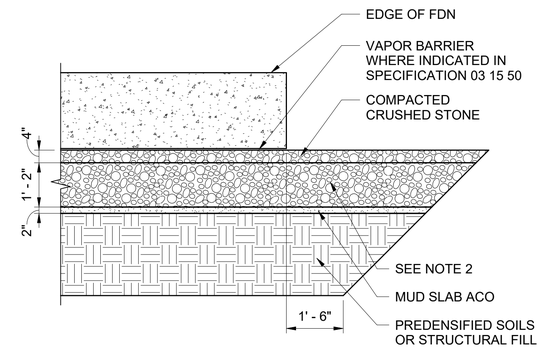

NOTES:

1. REFER TO DIVISION 31 EARTHWORK SPECIFICATION FOR SUBGRADE MATERIAL REQUIREMENTS.
2. PROVIDE ADDITIONAL LAYER OF COMPACTED CRUSHED STONE AT THE SOLIDS HANDLING STRUCTURE ONLY.

TYP SUBGRADE FOUNDATION DETAIL
NOT TO SCALE

EP-3: TYPICAL EXTERIOR HVAC/ELEC EQUIPMENT SLAB
NOT TO SCALE

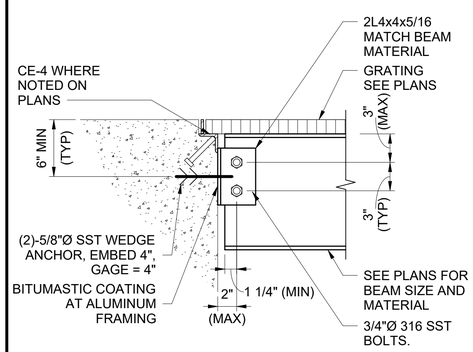

CC-1
NOT TO SCALE

EP-4: TYPICAL GENERATOR OR OTHER EQUIPMENT PAD
NOT TO SCALE

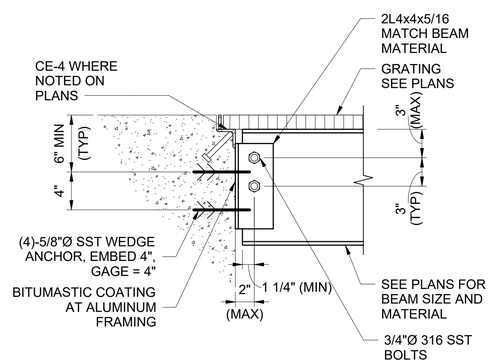

CC-2
NOT TO SCALE

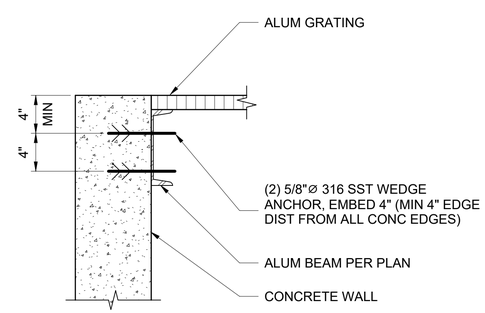

CC-3
NOT TO SCALE

GEORGIA REGISTERED No. SE001521 STRUCTURAL ENGINEER ALEX GRIFFIN

Alexander Griffin
Expires 2025.12.31
2024.06.26 11:32:03-05'00'

BURNS McDONNELL
4004 SUMMIT BLVD. NE, SUITE 1200
ATLANTA, GA 30319
770-587-4776
LICENSEE NO. PEF000100
AUTHORIZATION NO. J550903

date	detailed
APRIL 4, 2023	N. KROUSS
designed	**checked**
S. WINGARD	J. KIENHOLZ

Perry
HOUSTON COUNTY, GEORGIA

EAST PERRY WWTF
STANDARD CONCRETE DETAILS

project	contract
148538	

drawing **100S503** – rev. **0**

sheet of sheets

file

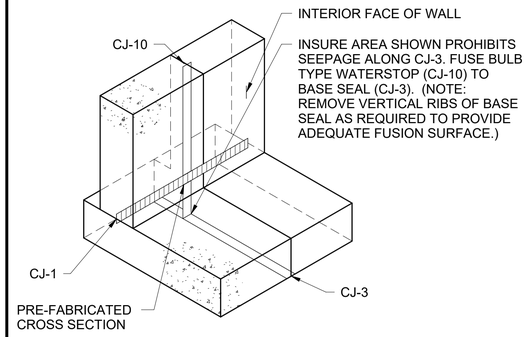

CJ INTERSECTION DETAIL
NOT TO SCALE

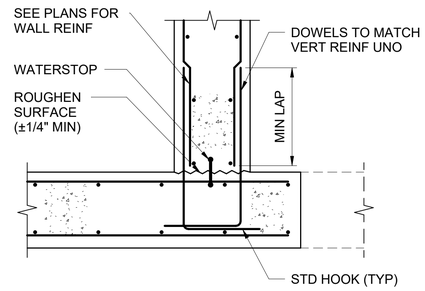

NOTE:
1. WALL REINFORCEMENT MAY BE SINGLE LAYER, SEE PLANS.

CJ-1 WITH WATERSTOP
CJ-2 WITHOUT WATERSTOP

CJ-1/CJ-2, WALL-TO-SLAB JOINT
NOT TO SCALE

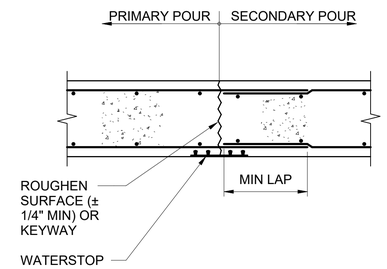

CJ-3 WITH WATERSTOP
CJ-4 WITHOUT WATERSTOP

CJ-3/CJ-4, JOINT IN MAT SLAB
NOT TO SCALE

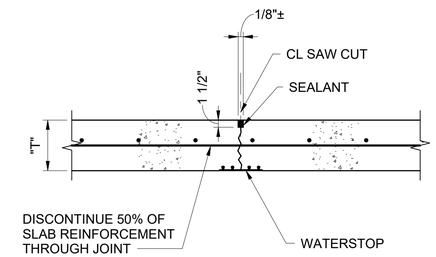

CJ-5 WITH WATERSTOP
CJ-6 WITHOUT WATERSTOP

CJ-5/CJ-6, SAWCUT JOINT IN SLAB-ON-GROUND
NOT TO SCALE

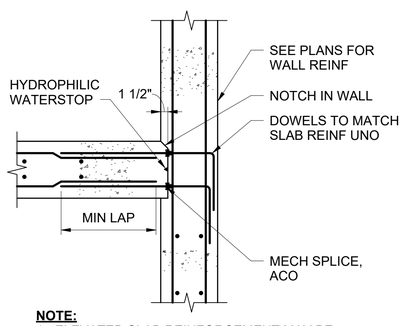

NOTE:
1. ELEVATED SLAB REINFORCEMENT MAY BE SINGLE LAYER, SEE PLANS. USE NON-EXPANSIVE WATERSTOP AT ELEVATED SLABS WITH SINGLE LAYER OF REINF.

CJ-7, ELEVATED SLAB-TO-WALL JOINT
NOT TO SCALE

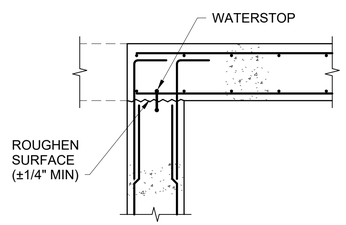

CJ-8 WITH WATERSTOP
CJ-9 WITHOUT WATERSTOP

CJ-8/CJ-9, WALL TO TOP SLAB JOINT
NOT TO SCALE

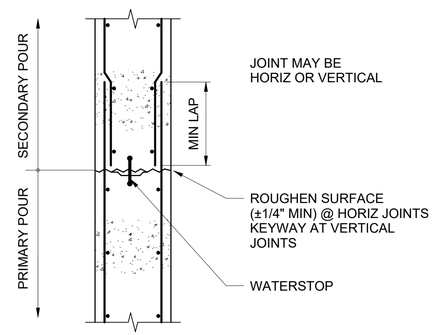

CJ-10 WITH WATERSTOP
CJ-11 WITHOUT WATERSTOP

CJ-10/CJ-11, WALL JOINT
NOT TO SCALE

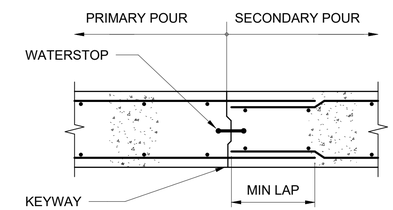

NOTE:
1. CONTINUOUS REINFORCING IN LIEU OF SPLICE ACO

CJ-12 WITH WATERSTOP
CJ-13 WITHOUT WATERSTOP

CJ-12/CJ-13, JOINT IN ELEVATED SLAB
NOT TO SCALE

GEORGIA REGISTERED No. SE001521 STRUCTURAL ENGINEER ALEX GRIFFIN

Alexander Griffin
Expires 2025.12.31
2024.06.26 11:32:18-05'00'

no.	date	by	ckd	description
0	06/26/24	SVW	AMG	ISSUED FOR CONSTRUCTION

BURNS McDONNELL
4004 SUMMIT BLVD. NE, SUITE 1200
ATLANTA, GA 30319
770-587-4776
LICENSEE NO. PEF000100
AUTHORIZATION NO. J550903

date	detailed
APRIL 4, 2023	N. KROUSS
designed	**checked**
S.WINGARD	J. KIENHOLZ

Perry
HOUSTON COUNTY, GEORGIA

EAST PERRY WWTF
STANDARD CONCRETE CONSTRUCTION JOINT DETAILS

project	contract
148538	

drawing **100S504** – rev. **0**
sheet of sheets
file

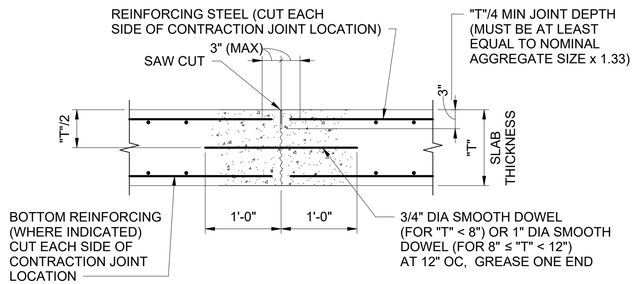

NOTES:

1. SAW JOINT AS SOON AS SURFACE IS FIRM ENOUGH TO NOT BE TORN OR DAMAGED BY THE BLADE (USUALLY 4 TO 12 HOURS AFTER CONCRETE HARDENS).

2. SAW CUT:
   CTJ-1: 1/8" WIDE SAW CUT (LEFT OPEN) OR PREFORMED CONTRACTION JOINT
   CTJ-2: 1/4" WIDE SAW CUT WITH SPECIFIED JOINT SEALANT

CTJ-1/CTJ-2
NOT TO SCALE

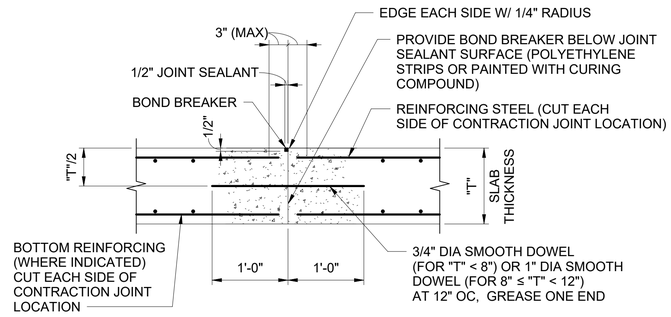

CTJ-3
NOT TO SCALE

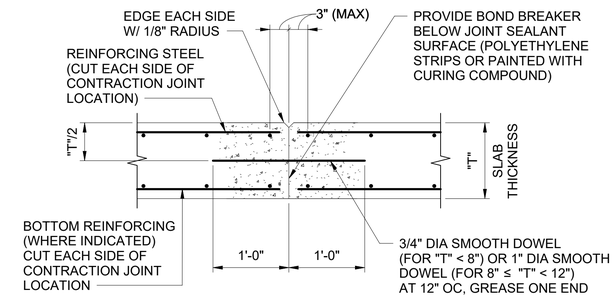

CTJ-4
NOT TO SCALE

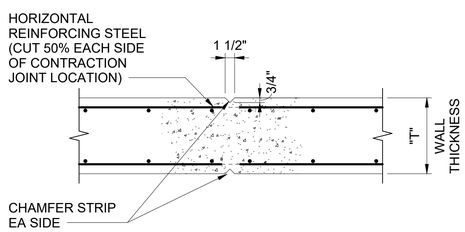

CTJ-5
NOT TO SCALE

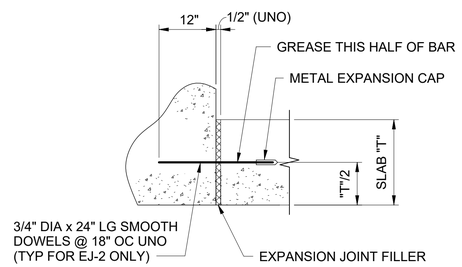

EJ-1 WITHOUT DOWEL
EJ-2 WITH DOWEL

EJ-1/EJ-2, EXPANSION JOINT
NOT TO SCALE

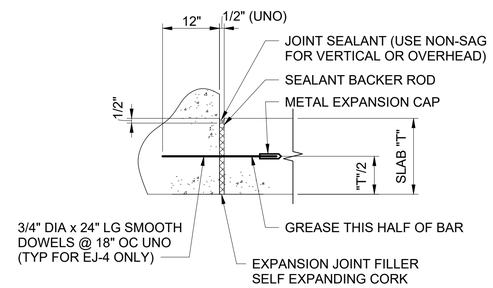

EJ-3 WITHOUT DOWEL
EJ-4 WITH DOWEL

EJ-3/EJ-4, EXPANSION JOINT W/ SEALANT
NOT TO SCALE

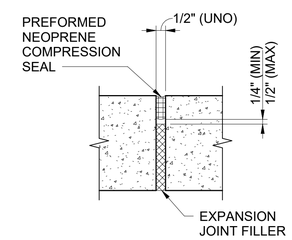

EJ-5, EXPANSION JOINT W/ COMPRESSION SEAL
NOT TO SCALE

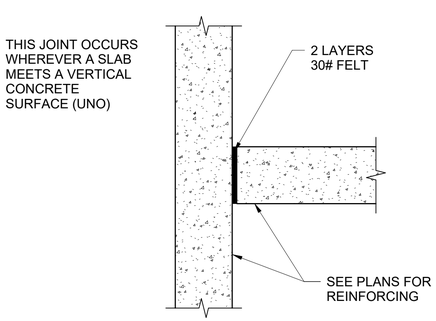

IJ-1, ISOLATION JOINT
NOT TO SCALE

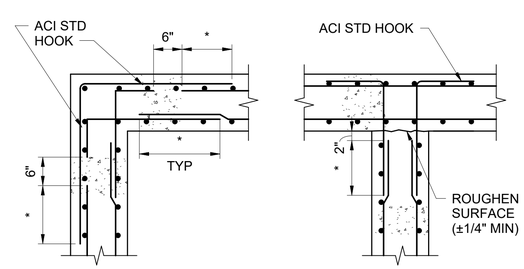

TWO LAYERS REINFORCING

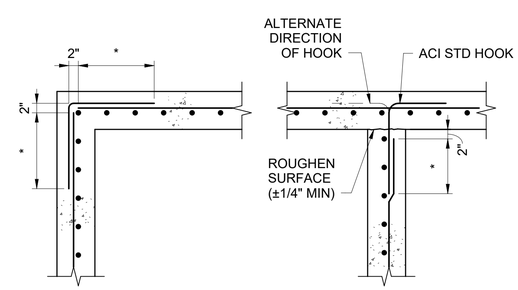

SINGLE LAYER REINFORCING

NOTES:

1. USE AT ALL CORNERS FOR ALL CONCRETE MEMBERS INCLUDING THICKENED SLAB ON GRADE, WALLS, CURBS, BEAMS, GRADE BEAMS AND SLABS, UNLESS INDICATED OTHERWISE.

2. *TYPICAL CONCRETE REINFORCEMENT LAP SLICE PER TABLE (THIS SHEET) UNLESS INDICATED OTHERWISE.

CORNER BAR DETAILS
NOT TO SCALE

GEORGIA REGISTERED No. SE001521 STRUCTURAL ENGINEER ALEX GRIFFIN

Alexander Griffin
Expires 2025.12.31
2024.06.26 11:33:30-05'00'

no.	date	by	ckd	description
0	06/26/24	SVW	AMG	ISSUED FOR CONSTRUCTION

BURNS McDONNELL
4004 SUMMIT BLVD. NE, SUITE 1200
ATLANTA, GA 30319
770-587-4776
LICENSEE NO. PEF000100
AUTHORIZATION NO. J550903

date	detailed
APRIL 4, 2023	N. KROUSS
designed	**checked**
S. WINGARD	J. KIENHOLZ

Perry
HOUSTON COUNTY, GEORGIA

EAST PERRY WWTF
STANDARD CONCRETE CONTRACTION AND EXPANSION JOINT DETAILS

project	contract
148538	

drawing **100S505** – rev. **0**

sheet of sheets

file

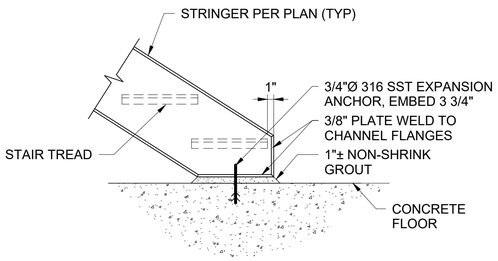

SR-2
NOT TO SCALE

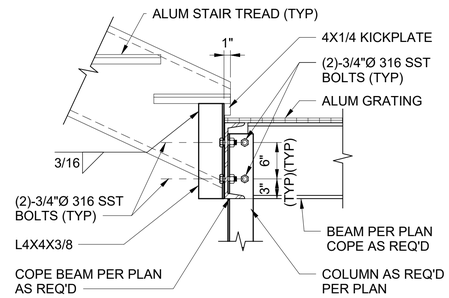

SR-7
NOT TO SCALE

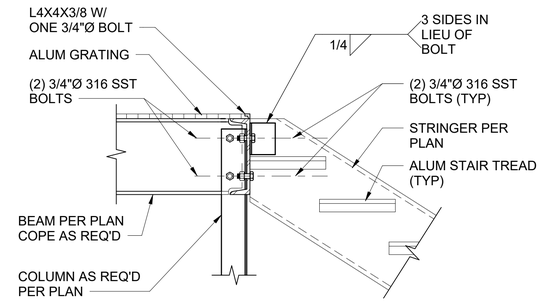

SR-8
NOT TO SCALE

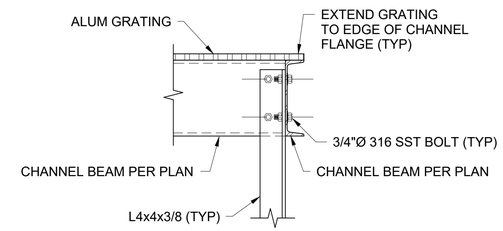

SR-10
NOT TO SCALE

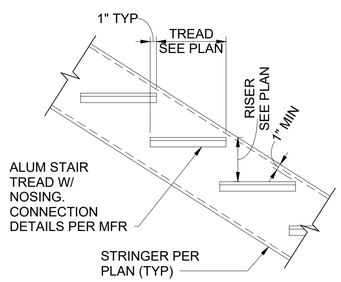

SR-11
NOT TO SCALE

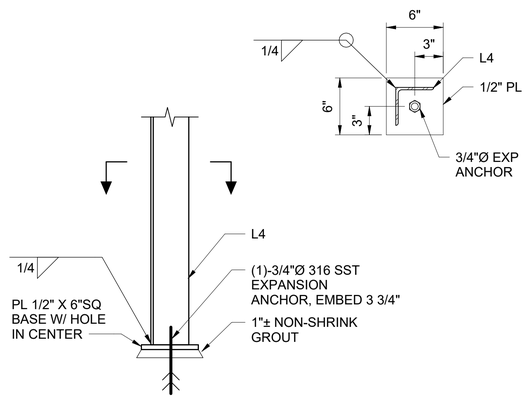

SR-12
NOT TO SCALE

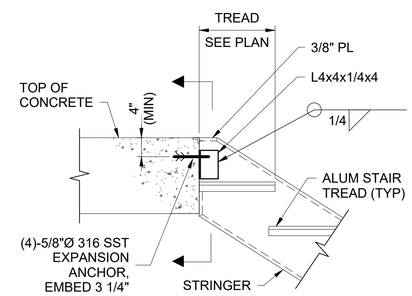

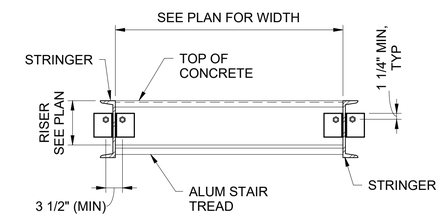

SECTION

SR-13
NOT TO SCALE

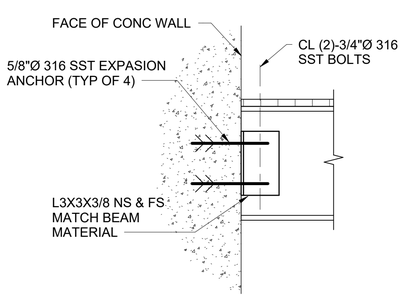

SR-14
NOT TO SCALE

no.	date	by	ckd	description
0	06/26/24	SVW	AMG	ISSUED FOR CONSTRUCTION

GEORGIA REGISTERED No. SE001521 STRUCTURAL ENGINEER ALEX GRIFFIN

Alexander Griffin
Expires 2025.12.31
2024.06.26 11:34:30-05'00'

BURNS McDONNELL
4004 SUMMIT BLVD. NE, SUITE 1200
ATLANTA, GA 30319
770-587-4776
LICENSEE NO. PEF000100
AUTHORIZATION NO. J550903

date	detailed
APRIL 4, 2023	N. KROUSS
designed	**checked**
S. WINGARD	J. KIENHOLZ

Perry
HOUSTON COUNTY, GEORGIA

EAST PERRY WWTF
STANDARD STAIR DETAILS

project	contract
148538	

drawing 100S506 – **rev.** 0

sheet of **sheets**

file

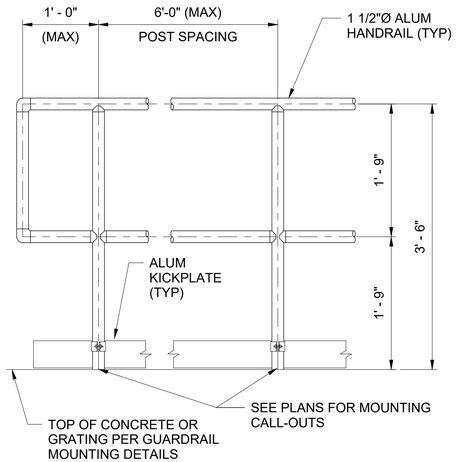

GR-1A
NOT TO SCALE

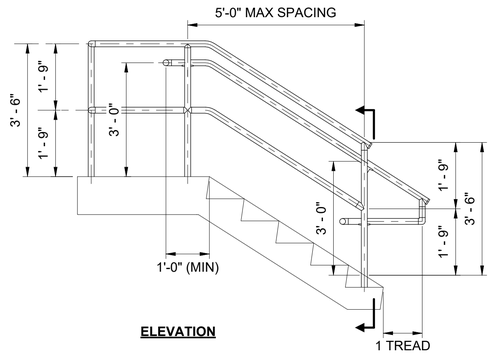

ELEVATION

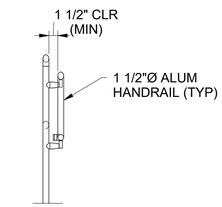

SECTION

HR-2A
NOT TO SCALE

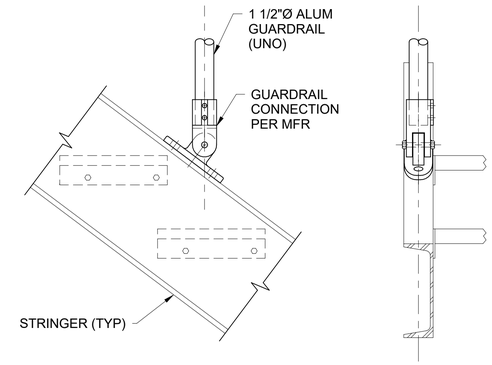

TOP MOUNTED GUARDRAIL TO STAIRS
NOT TO SCALE

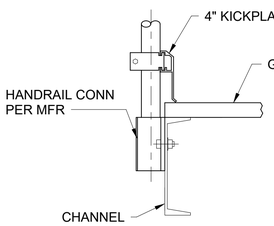

SE-14A

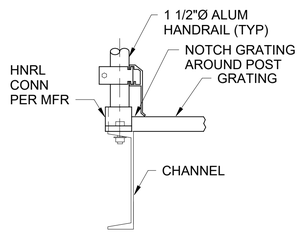

SE-3A

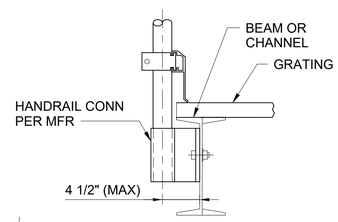

SE-12A

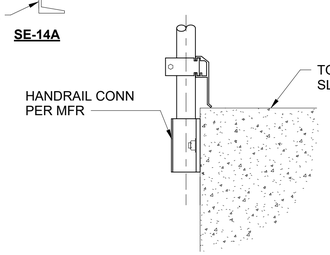

CE-16A

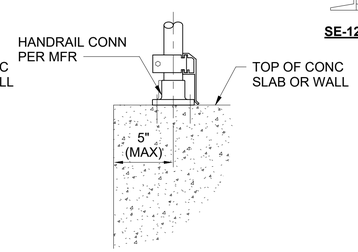

CE-18A

HANDRAIL MOUNTING
NOT TO SCALE

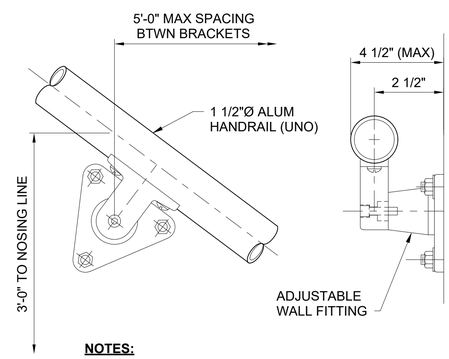

NOTES:

1. ATTACH HANDRAIL TO BRACKET AS REQUIRED.
2. BRACKET AND ATTACHMENT TO BE ADEQUATE FOR AT LEAST 200 POUNDS APPLIED IN ANY DIRECTION.

HR-6A
NOT TO SCALE

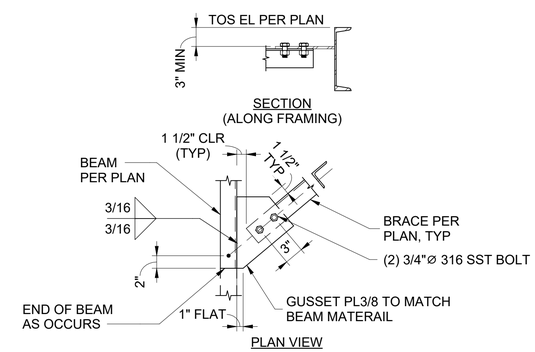

NOTES:

1. HOLES TO BE STANDARD SIZED, SLOTTED AND OVERSIZED HOLES ARE NOT PERMITTED.

HL-6
NOT TO SCALE

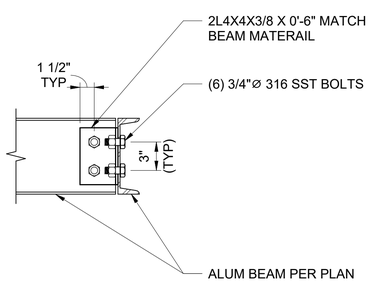

SS-1
NOT TO SCALE

no.	date	by	ckd	description
0	06/26/24	SVW	AMG	ISSUED FOR CONSTRUCTION

BURNS McDONNELL
4004 SUMMIT BLVD. NE, SUITE 1200
ATLANTA, GA 30319
770-587-4776
LICENSEE NO. PEF000100
AUTHORIZATION NO. J550903

date	detailed
APRIL 4, 2023	N. KROUSS
designed	**checked**
S. WINGARD	J. KIENHOLZ

Perry
HOUSTON COUNTY, GEORGIA

EAST PERRY WWTF
STANDARD ALUMINUM RAIL AND FRAMING DETAILS

project	contract
148538	

drawing **100S507** – rev. **0**

sheet of sheets

file

GEORGIA REGISTERED No. SE001521 STRUCTURAL ENGINEER ALEX GRIFFIN

Alexander Griffin
Expires 2025.12.31
2024.06.26 11:34:47-05'00'

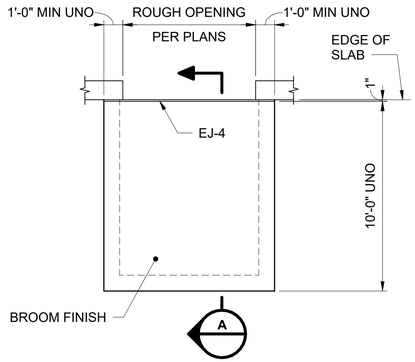

TYPICAL APPROACH SLAB PLAN
NOT TO SCALE

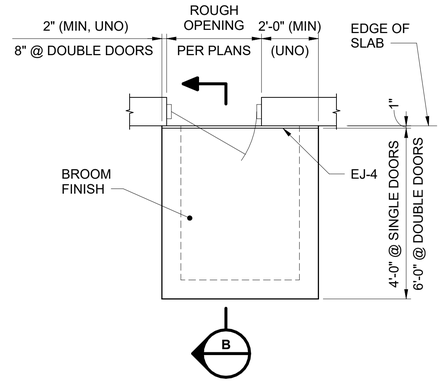

TYPICAL DOOR STOOP PLAN
NOT TO SCALE

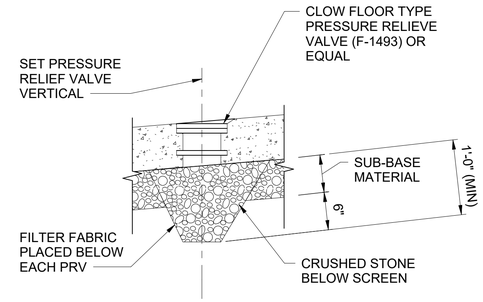

PRV-1
NOT TO SCALE

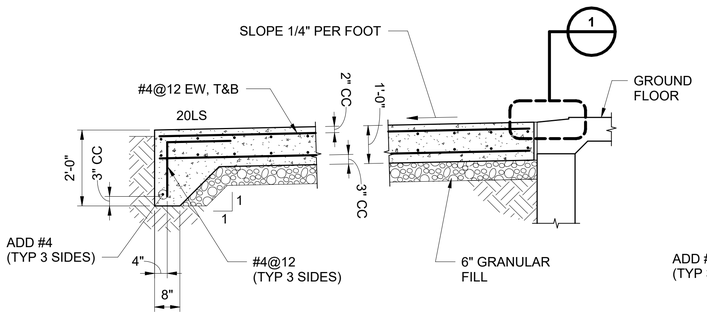

SECTION A
NOT TO SCALE

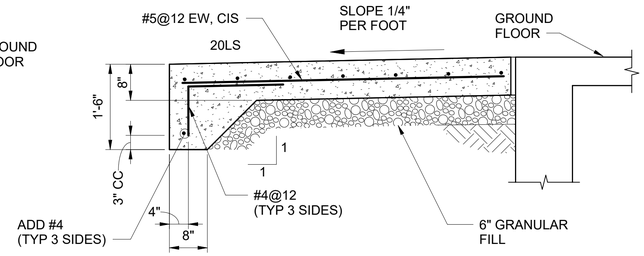

SECTION B
NOT TO SCALE

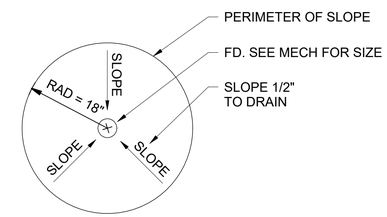

FD-1
NOT TO SCALE

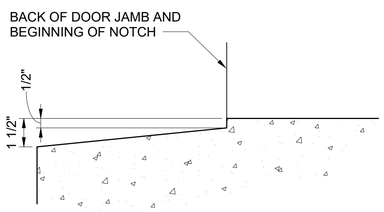

DETAIL 1
NOT TO SCALE

no.	date	by	ckd	description
0	06/26/24	SVW	AMG	ISSUED FOR CONSTRUCTION

BURNS McDONNELL
4004 SUMMIT BLVD. NE, SUITE 1200
ATLANTA, GA 30319
770-587-4776
LICENSEE NO. PEF000100
AUTHORIZATION NO. J550903

date	detailed
MARCH 13, 2024	S. WINGARD
designed	**checked**
S. WINGARD	J. KIENHOLZ

Perry
HOUSTON COUNTY, GEORGIA

GEORGIA REGISTERED No. SE001521 STRUCTURAL ENGINEER ALEX GRIFFIN

Alexander Griffin
Expires 2025.12.31
2024.06.26 11:35:04-05'00'

EAST PERRY WWTF
STANDARD MISCELLANEIOUS DETAILS

project	contract
148538	

drawing **100S508** – rev. **0**

sheet of sheets

file

NOTES:

1. SEE S000 SERIES FOR GENERAL NOTES, SPECIAL INCSPECTION REQUIREMENTS AND STANDARD DETAILS.
2. HEADWORKS CONCRETE MIXTURE SHALL INCLUDE XYPEX BIO-SAN C500 ADMIXTURE.
3. DESIGN LOAD BEARING VALUE = 3000F PSF (NET)

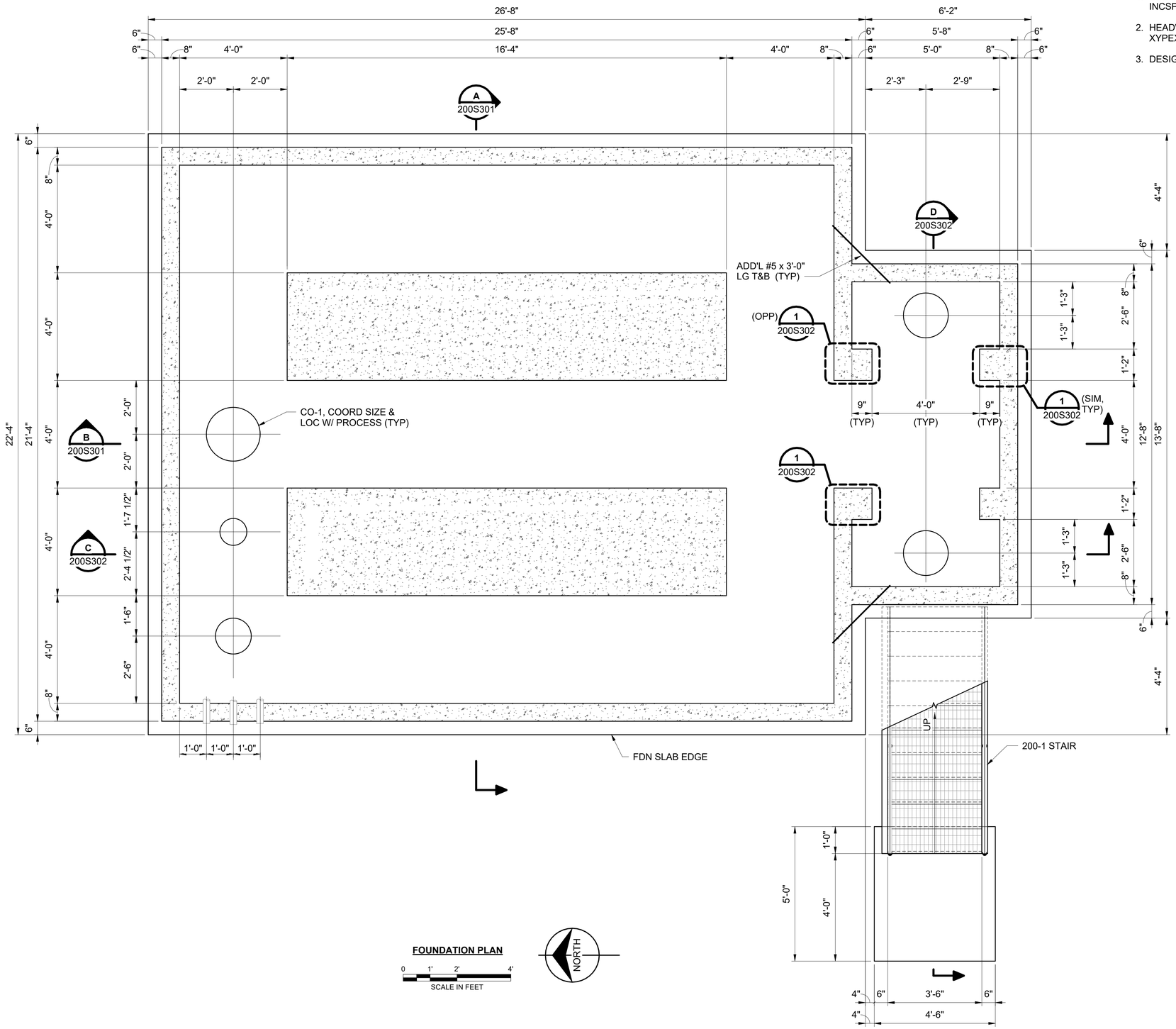

FOUNDATION PLAN

0 1' 2' 4'
SCALE IN FEET

no.	date	by	ckd	description
0	06/26/24	SVW	AMG	ISSUED FOR CONSTRUCTION

BURNS McDONNELL
4004 SUMMIT BLVD. NE, SUITE 1200
ATLANTA, GA 30319
770-587-4776
LICENSEE NO. PEF000100
AUTHORIZATION NO. J550903

date	detailed
APRIL 4, 2023	B. MIMIAGA
designed	**checked**
S. WINGARD	J. KIENHOLZ

Perry
HOUSTON COUNTY, GEORGIA

GEORGIA REGISTERED No. SE001521 STRUCTURAL ENGINEER ALEX GRIFFIN

Alexander Griffin
Expires 2025.12.31
2024.06.26 11:35:21-05'00'

EAST PERRY WWTF
HEADWORKS FOUNDATION PLAN

project	contract
148538	

drawing **200S101** – rev. **0**

sheet of sheets

file

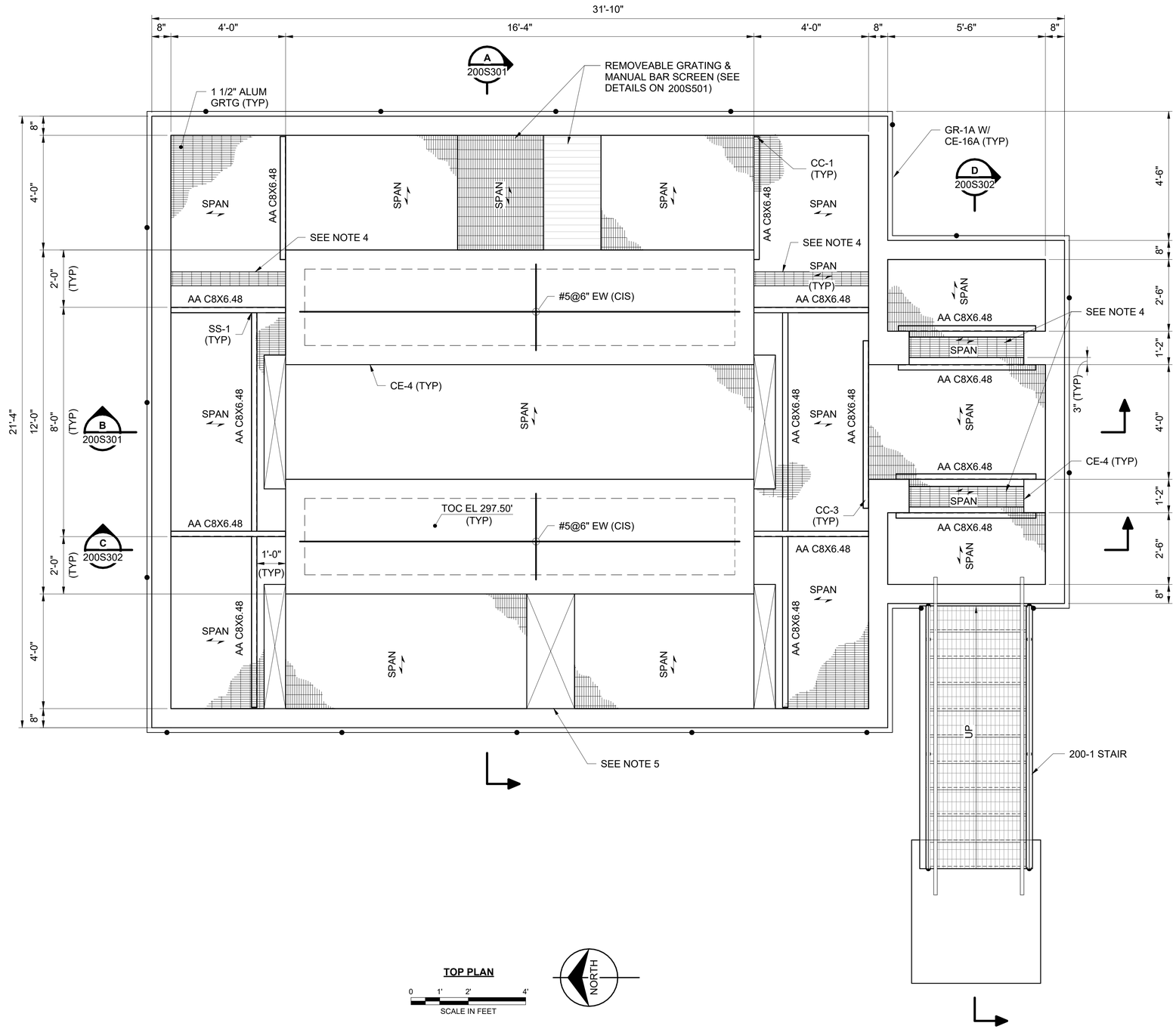

TOP PLAN

0 1' 2' 4'
SCALE IN FEET

NORTH

NOTES:

1. SEE S000 SERIES FOR GENERAL NOTES, SPECIAL INSPECTION REQUIREMENTS AND STANDARD DETAILS.
2. ALL FRAMING TO BE ALUMINUM. ALL BOLTS TO BE 316 SST.
3. COORD GRATING EXTENTS WITH PROCESS GATE OPENINGS AND EQUIPMENT.
4. PROVIDE SECTION OF REMOVABLE 1 1/2" ALUM GRATING WHERE PROCESS PULL GATES OCCUR.
5. COORDINATE SIZE AND LOCATION OF OPENINGS WITH APPROVED MECHANICAL SCREEN SUBMITTAL. MAX GAP AFTER INSTALLATION SHALL BE 1".

DESIGN LOADS:

1. SEE 100S002 FOR STRUCTURAL DESIGN LOADING AND CRITERIA.
2. SUPERIMPOSED DEAD LOAD = 10 PSF

GEORGIA REGISTERED No. SE001521 STRUCTURAL ENGINEER ALEX GRIFFIN

Alexander Griffin
Expires 2025.12.31
2024.06.26 11:35:36-05'00'

no.	date	by	ckd	description
0	06/26/24	SVW	AMG	ISSUED FOR CONSTRUCTION

BURNS McDONNELL
4004 SUMMIT BLVD. NE, SUITE 1200
ATLANTA, GA 30319
770-587-4776
LICENSEE NO. PEF000100
AUTHORIZATION NO. J550903

date	detailed
APRIL 4, 2023	B. MIMIAGA
designed	**checked**
S. WINGARD	J. KIENHOLZ

Perry
HOUSTON COUNTY, GEORGIA

EAST PERRY WWTF
HEADWORKS TOP PLAN

project	contract
148538	

drawing **200S102** — rev. **0**

sheet of sheets

file

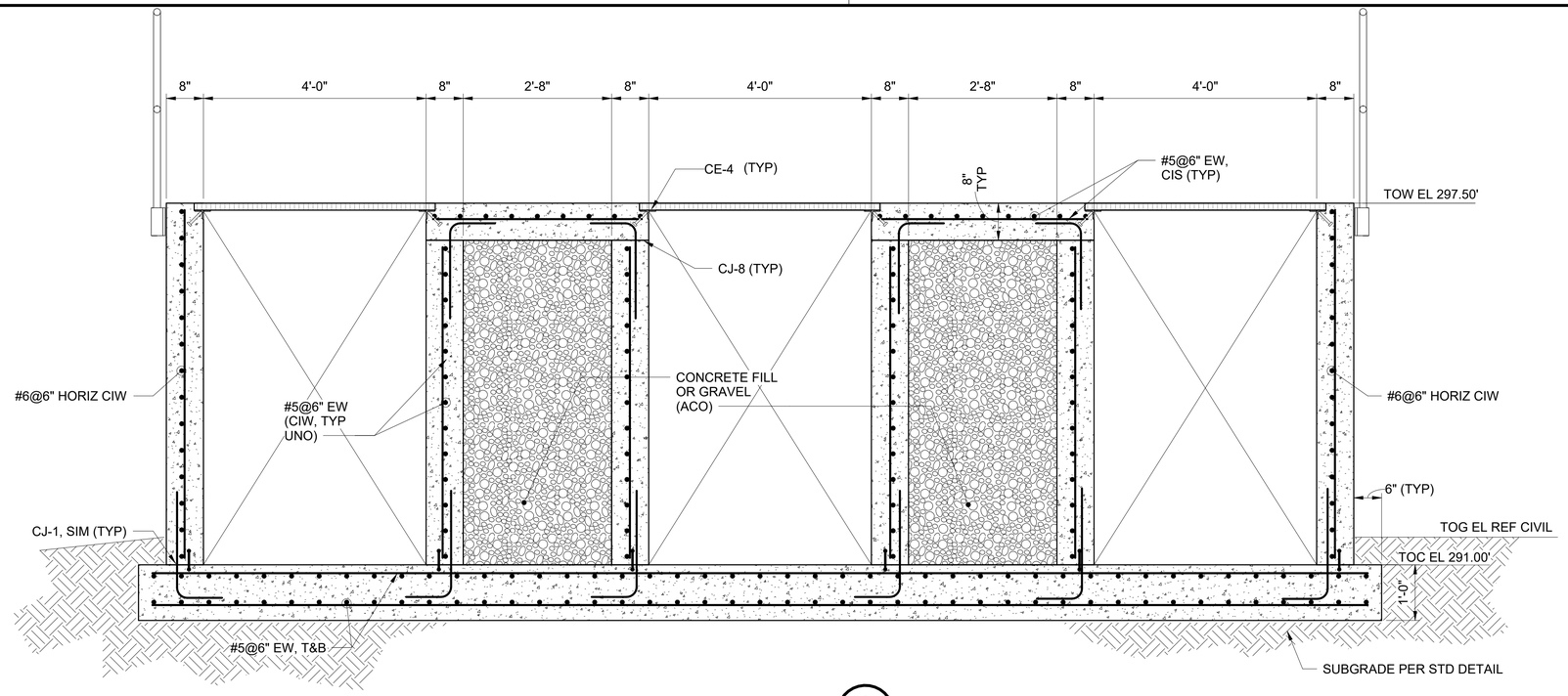

SECTION A 200S101

0 1' 2' 3'
SCALE IN FEET

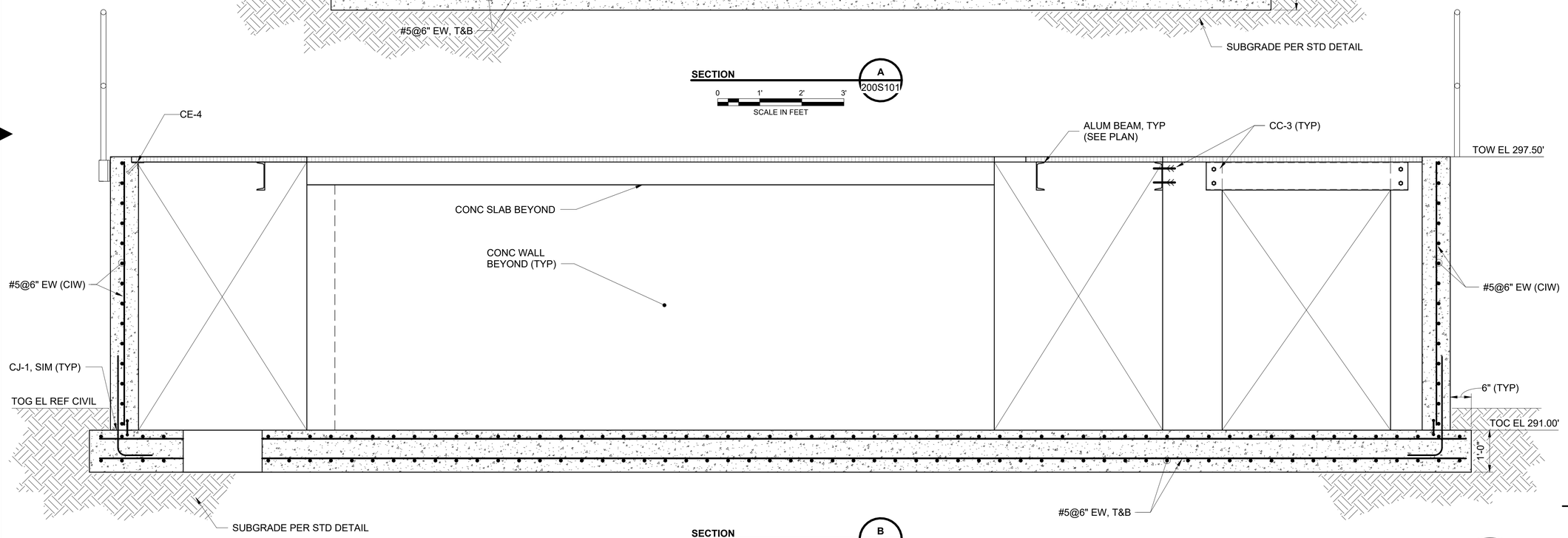

SECTION B 200S101

0 1' 2' 3'
SCALE IN FEET

GEORGIA REGISTERED No. SE001521 STRUCTURAL ENGINEER ALEX GRIFFIN

Alexander Griffin
Expires 2025.12.31
2024.06.26 11:35:55-05'00'

no.	date	by	ckd	description
0	06/26/24	SVW	AMG	ISSUED FOR CONSTRUCTION

BURNS McDONNELL
4004 SUMMIT BLVD. NE, SUITE 1200
ATLANTA, GA 30319
770-587-4776
LICENSEE NO. PEF000100
AUTHORIZATION NO. J550903

date	detailed
MARCH 3, 2023	S. WINGARD
designed	**checked**
S. WINGARD	J. KIENHOLZ

Perry

HOUSTON COUNTY, GEORGIA

EAST PERRY WWTF
HEADWORKS SECTIONS SHEET 1

project	contract
148538	

drawing **200S301** – rev. **0**

sheet of sheets

file

Scale For Microfilming: Millimeters / Inches

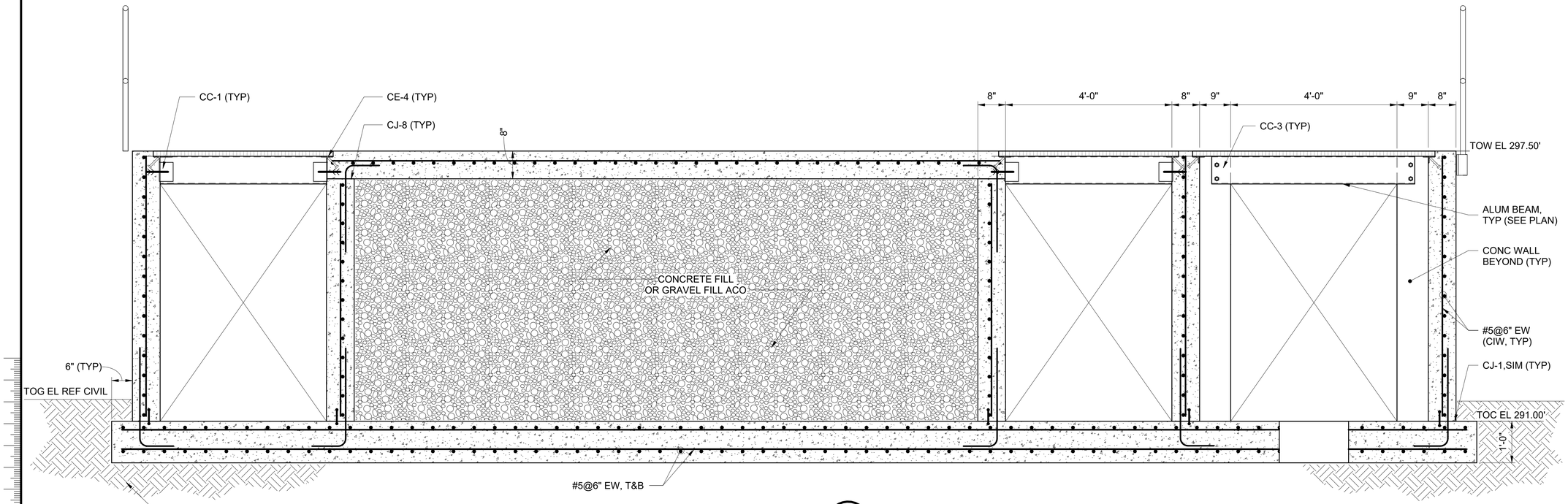

SECTION C 200S101

0 1' 2' 3'
SCALE IN FEET

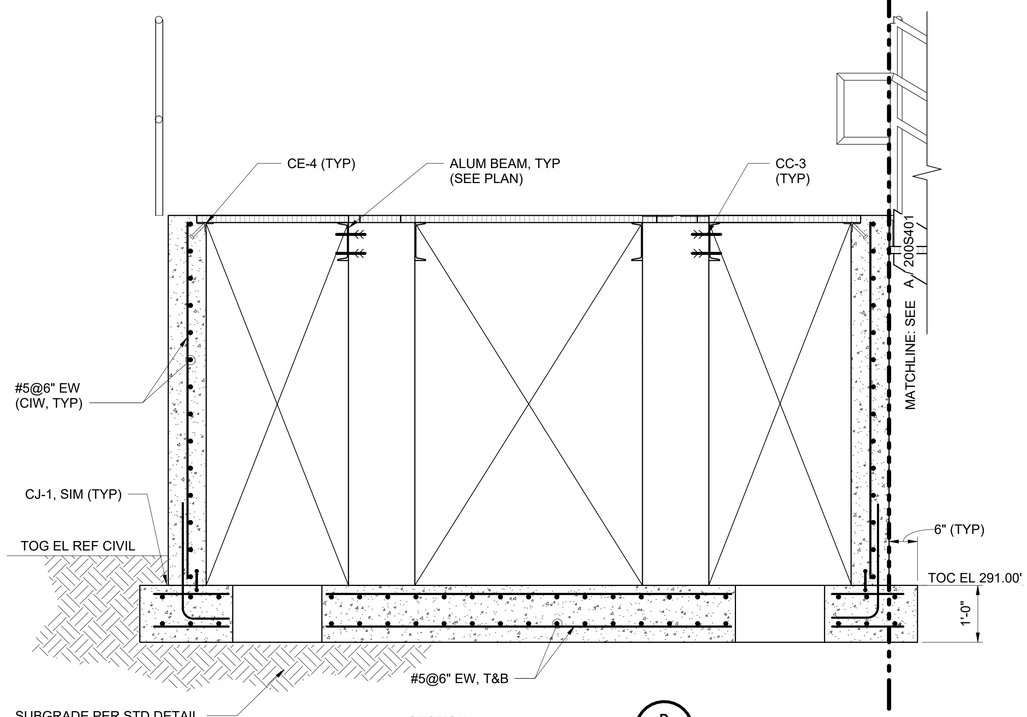

SECTION D 200S101

0 1' 2' 3'
SCALE IN FEET

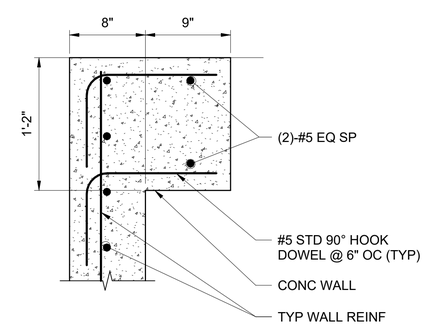

DETAIL 1 200S101

0 1/2' 1' 1 1/2'
SCALE IN FEET

GEORGIA REGISTERED No. SE001521 STRUCTURAL ENGINEER ALEX GRIFFIN

Alexander Griffin
Expires 2025.12.31
2024.06.26 11:36:16-05'00'

no.	date	by	ckd	description
0	06/26/24	SVW	AMG	ISSUED FOR CONSTRUCTION

BURNS McDONNELL
4004 SUMMIT BLVD. NE, SUITE 1200
ATLANTA, GA 30319
770-587-4776
LICENSEE NO. PEF000100
AUTHORIZATION NO. J550903

date	detailed
APRIL 19, 2023	S. WINGARD
designed	**checked**
S. WINGARD	J. KIENHOLZ

Perry
HOUSTON COUNTY, GEORGIA

EAST PERRY WWTF
HEADWORKS SECTIONS SHEET 2 AND DETAIL

project	contract
148538	

drawing **200S302** – rev. **0**

sheet of sheets

file

Scale For Microfilming: Millimeters / Inches

NOTES:

1. SEE S000 SERIES FOR GENERAL NOTES, SPECIAL INSPECTION REQUIREMENTS AND STANDARD DETAILS.
2. ALL FRAMING TO BE ALUMINUM. ALL BOLTS TO BE 316 SST.

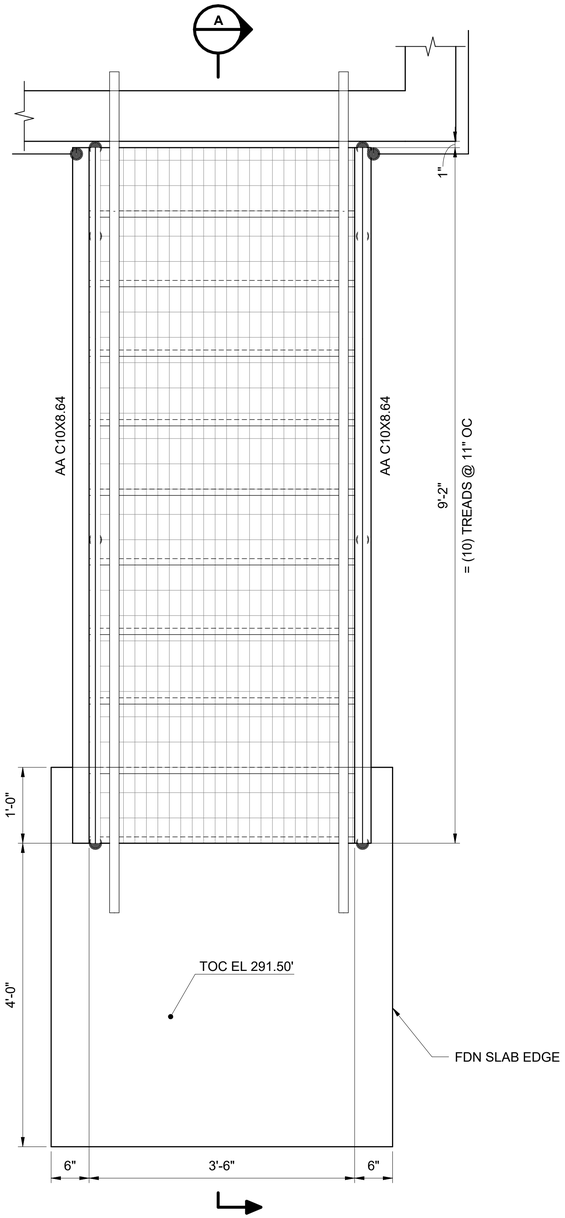

200-1 STAIR PLAN

0 1/2' 1' 2'
SCALE IN FEET

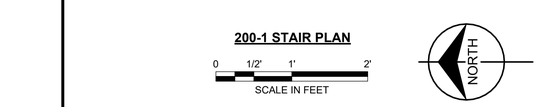

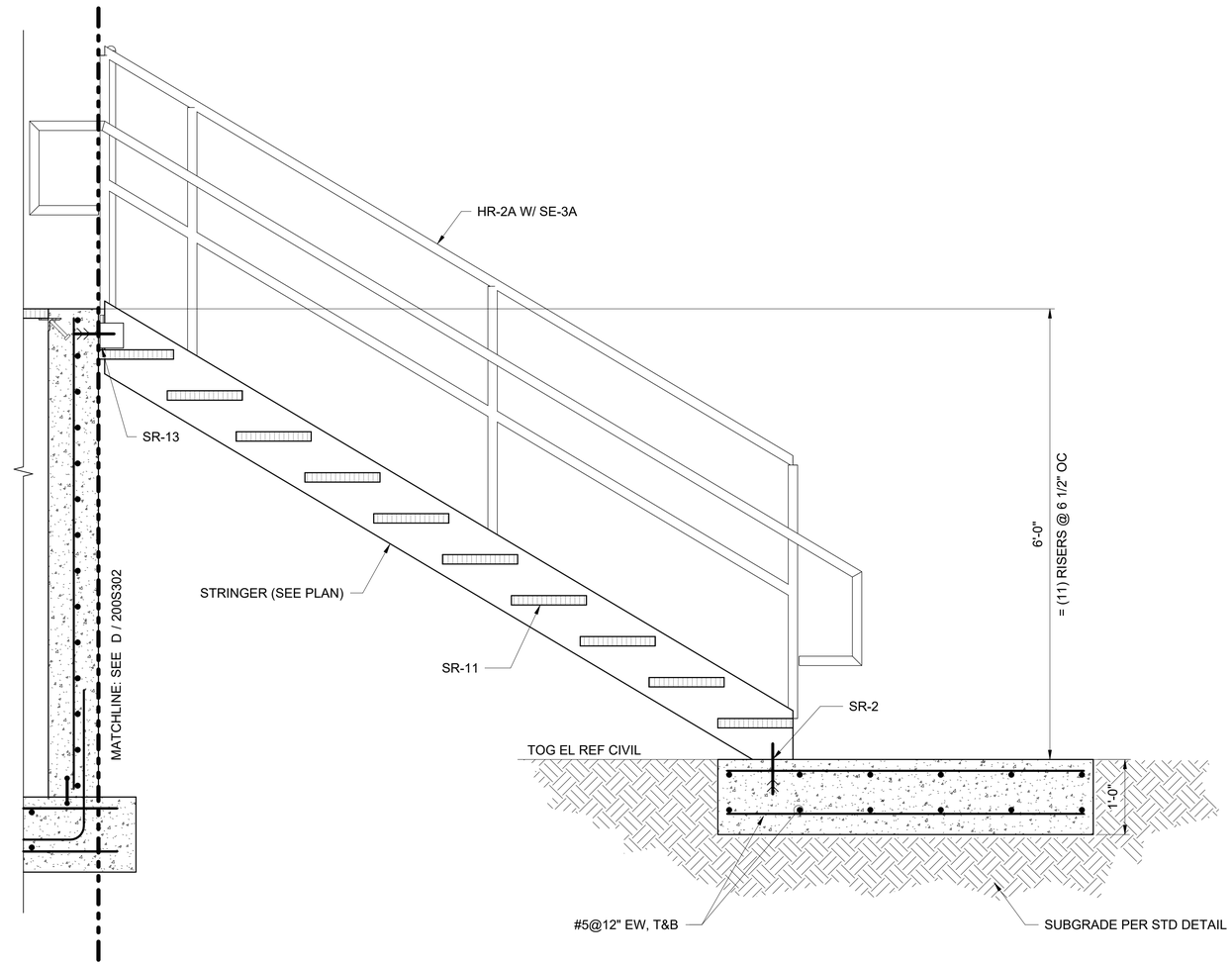

SECTION A

0 1/2' 1' 2'
SCALE IN FEET

GEORGIA REGISTERED No. SE001521 STRUCTURAL ENGINEER ALEX GRIFFIN

Alexander Griffin
Expires 2025.12.31
2024.06.26 11:36:32-05'00'

no.	date	by	ckd	description
0	06/26/24	SVW	AMG	ISSUED FOR CONSTRUCTION

BURNS McDONNELL
4004 SUMMIT BLVD. NE, SUITE 1200
ATLANTA, GA 30319
770-587-4776
LICENSEE NO. PEF000100
AUTHORIZATION NO. J550903

date	detailed
JANUARY 3, 2024	S. WINGARD
designed	**checked**
S. WINGARD	J. KIENHOLZ

Perry
HOUSTON COUNTY, GEORGIA

EAST PERRY WWTF
HEADWORKS STAIR PLANS AND DETAILS

project	contract
148538	

drawing **200S401** – rev. **0**

sheet of sheets

file

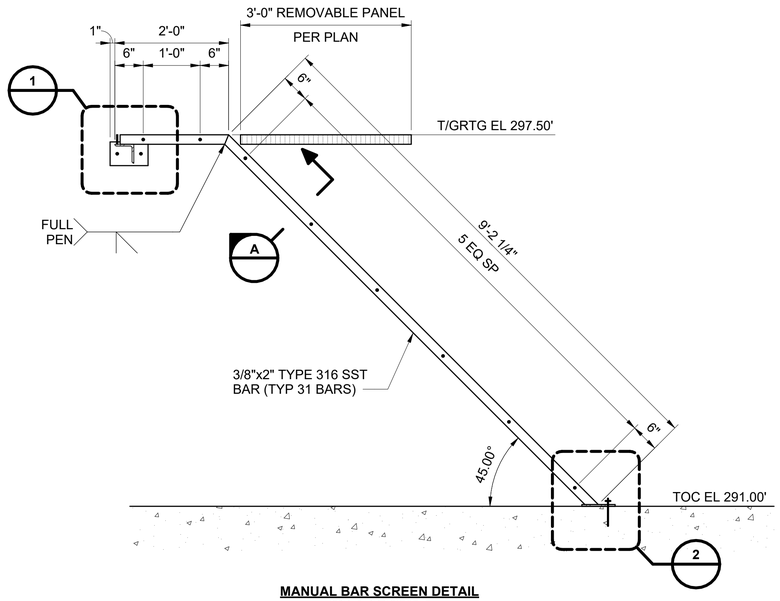

MANUAL BAR SCREEN DETAIL
NOT TO SCALE

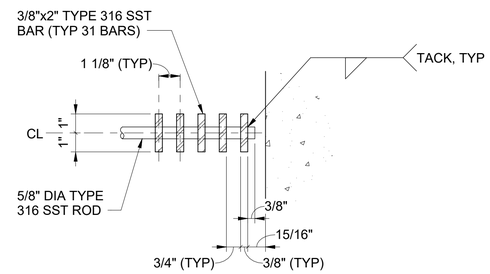

DETAIL A 200S501
NOT TO SCALE

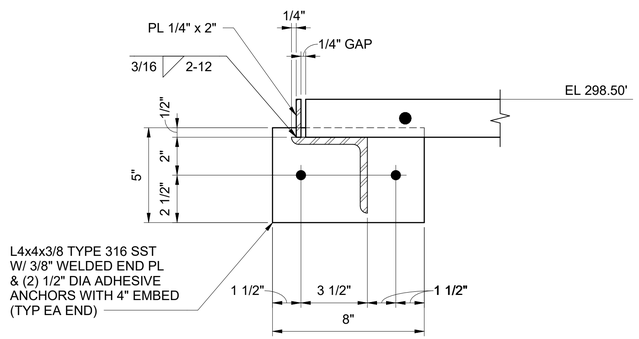

DETAIL 1 200S501
NOT TO SCALE

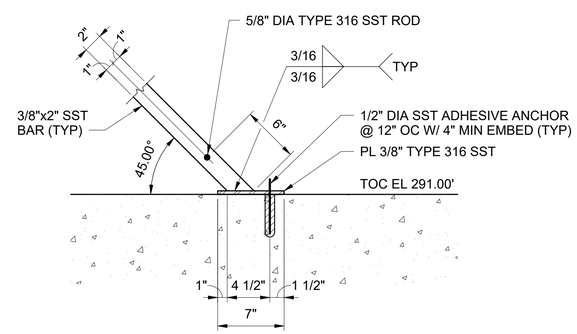

DETAIL 2 200S501
NOT TO SCALE

no.	date	by	ckd	description
0	06/26/24	SVW	AMG	ISSUED FOR CONSTRUCTION

GEORGIA REGISTERED No. SE001521 STRUCTURAL ENGINEER ALEX GRIFFIN

Alexander Griffin
Expires 2025.12.31
2024.06.26 11:36:48-05'00'

BURNS McDONNELL
4004 SUMMIT BLVD. NE, SUITE 1200
ATLANTA, GA 30319
770-587-4776
LICENSEE NO. PEF000100
AUTHORIZATION NO. J550903

date	detailed
APRIL 8, 2024	S. WINGARD
designed	**checked**
S. WINGARD	J. KIENHOLZ

Perry
HOUSTON COUNTY, GEORGIA

EAST PERRY WWTF
HEADWORKS MANUAL BAR SCREEN DETAILS

project	contract
148538	

drawing **200S501** – rev. **0**

sheet of sheets
file

Scale For Microfilming
Millimeters
Inches

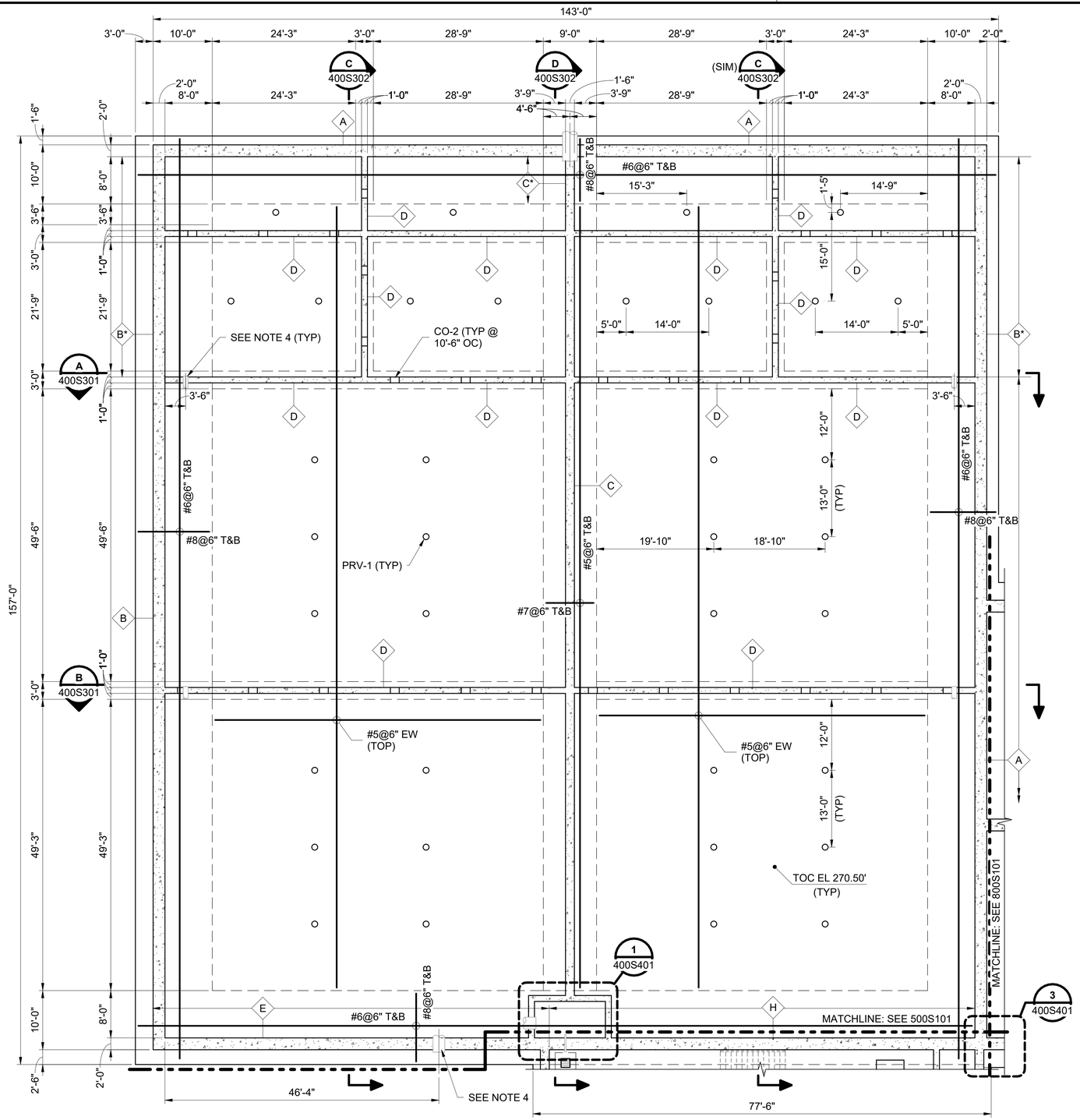

FOUNDATION PLAN

0 10' 20'
SCALE IN FEET

NORTH

NOTES:

1. SEE S000 SERIES FOR GENERAL NOTES, SPECIAL INSPECTION REQUIREMENTS AND STANDARD DETAILS.
2. INTERIOR WALLS SHALL ACHIEVE DESIGN STRENGTH AS DEMONSTRATED BY CYLINDER TESTING PRIOR TO LEAK TEST AND BACKFILL.
3. CONTRACTOR TO LOCATE CONSTRUCTION JOINTS PER SPECIFICATION 03 30 00 AND SUBMIT FOR APPROVAL BY ENGINEER PRIOR TO CONSTRUCTION.
4. COORDINATE PIPE PENETRATIONS W/ PROCESS. REINFORCE WALL PER CO-1
5. DESIGN LOAD BEARING VALUE = 2500 PSF (NET)

X DENOTES WALL TAG. SEE TYP DETAIL ON 400S303 FOR REINF.

GEORGIA REGISTERED No. SE001521 STRUCTURAL ENGINEER ALEX GRIFFIN

Alexander Griffin
Expires 2025.12.31
2024.06.26 11:37:02-05'00'

no.	date	by	ckd	description
0	06/26/24	SVW	AMG	ISSUED FOR CONSTRUCTION

BURNS McDONNELL
4004 SUMMIT BLVD. NE, SUITE 1200
ATLANTA, GA 30319
770-587-4776
LICENSEE NO. PEF000100
AUTHORIZATION NO. J550903

date	detailed
APRIL 3, 2023	S. WINGARD
designed	**checked**
S. WINGARD	J. KIENHOLZ

Perry
HOUSTON COUNTY, GEORGIA

EAST PERRY WWTF
PROCESS BASIN A FOUNDATION PLAN

project	contract
148538	

drawing **400S101** — rev. **0**

sheet of sheets

file

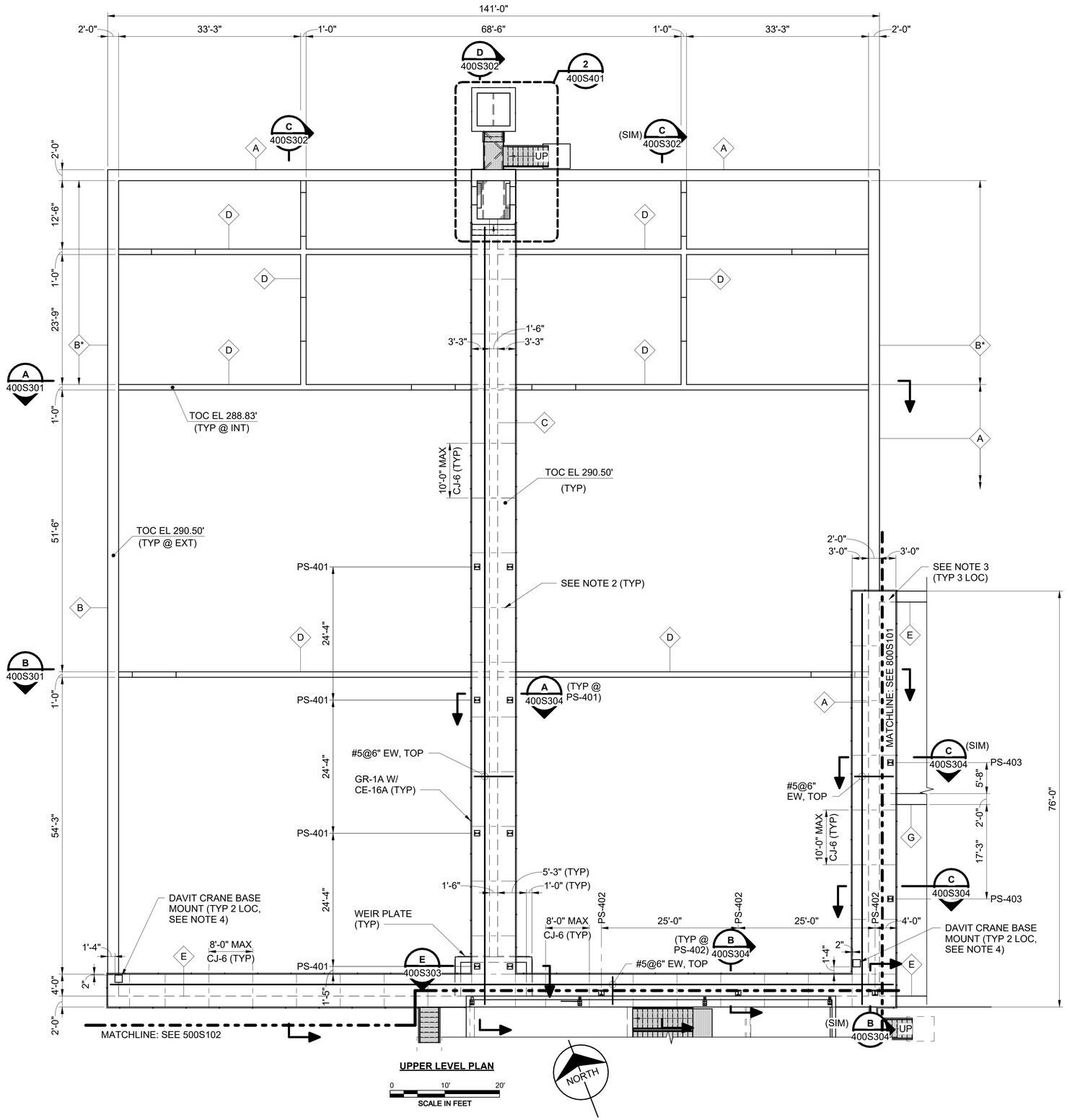

UPPER LEVEL PLAN

NOTES:

1. SEE S000 SERIES FOR GENERAL NOTES, SPECIAL INSPECTION REQUIREMENTS AND STANDARD DETAILS.
2. CJ-6 TO ALIGN WITH THE WALL CONSTRUCTION JOINTS WHERE APPLICABLE.
3. PROVIDE IJ-1 BETWEEN TOP OF WALL AND UNDERSIDE OF WALKWAY @ WALL E AND G.
4. DAVIT CRANE BASIS OF DESIGN IS THERN 5PA10 ENSIGN 1000 SERIES WITH MOUNTED PEDESTAL BASE WITH (4) 1/2" DIAMETER POST INSTALLED ANCHORS, EMBED = 6". MIN REACH LENGTH = 4'-0" AND MIN REACH HEIGHT = 7'-0". MIN ALLOWABLE LOAD = 500 LB. MIN HOOK LENGTH = 26'-0". SUBMIT DAVIT CRANE FOR ENGINEER APPROVAL BEFORE CONSTRUCTION.

X DENOTES WALL TAG. SEE TYP DETAIL ON 400S303 FOR REINF.

no.	date	by	ckd	description
0	06/26/24	SVW	AMG	ISSUED FOR CONSTRUCTION

GEORGIA REGISTERED No. SE001521 STRUCTURAL ENGINEER ALEX GRIFFIN

Alexander Griffin
Expires 2025.12.31
2024.06.26 11:37:29-05'00'

BURNS McDONNELL
4004 SUMMIT BLVD. NE, SUITE 1200
ATLANTA, GA 30319
770-587-4776
LICENSEE NO. PEF000100
AUTHORIZATION NO. J550903

date	detailed
APRIL 3, 2023	S. WIINGARD
designed	**checked**
S. WINGARD	J. KIENHOLZ

Perry
HOUSTON COUNTY, GEORGIA

EAST PERRY WWTF
PROCESS BASIN A TOP PLAN

project	contract
148538	

drawing 400S102 — **rev.** 0

sheet of sheets
file

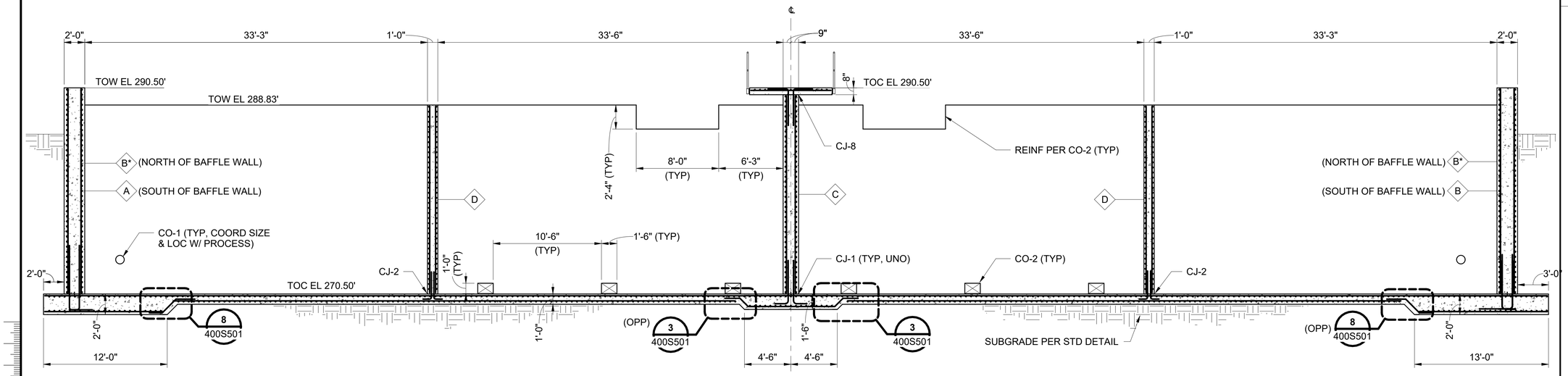

SECTION A 400S101

0 4' 8' 16'

SCALE IN FEET

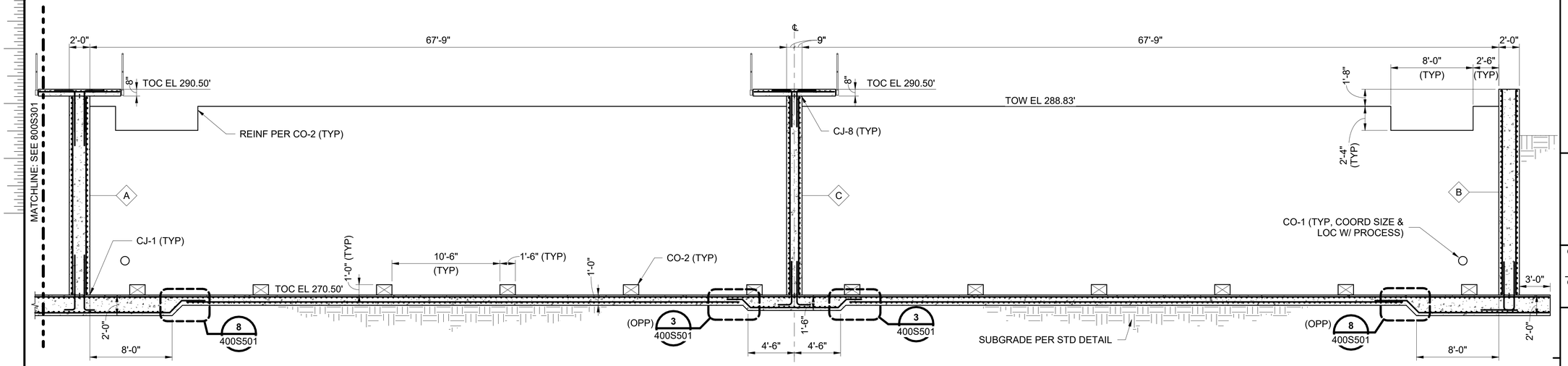

SECTION B 400S101

0 4' 8' 16'

SCALE IN FEET

GEORGIA REGISTERED No. SE001521 STRUCTURAL ENGINEER ALEX GRIFFIN

Alexander Griffin
Expires 2025.12.31
2024.06.26 11:37:42-05'00'

no.	date	by	ckd	description
0	06/26/24	SVW	AMG	ISSUED FOR CONSTRUCTION

BURNS McDONNELL
4004 SUMMIT BLVD. NE, SUITE 1200
ATLANTA, GA 30319
770-587-4776
LICENSEE NO. PEF000100
AUTHORIZATION NO. J550903

date	detailed
MARCH 30, 2023	S. WINGARD
designed	**checked**
S. WINGARD	J. KIENHOLZ

Perry

HOUSTON COUNTY, GEORGIA

EAST PERRY WWTF
PROCESS BASIN A SECTIONS SHEET 1

project	contract
148538	

drawing **400S301** — rev. **0**

sheet of sheets

file

Scale For Microfilming: Millimeters / Inches

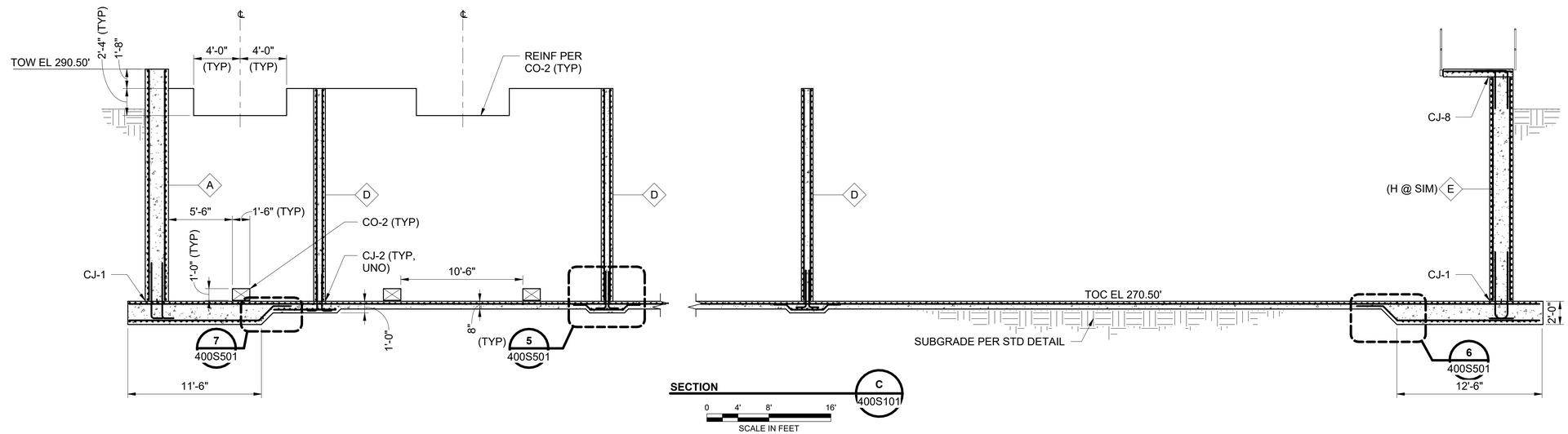

SECTION C 400S101

0 4' 8' 16'
SCALE IN FEET

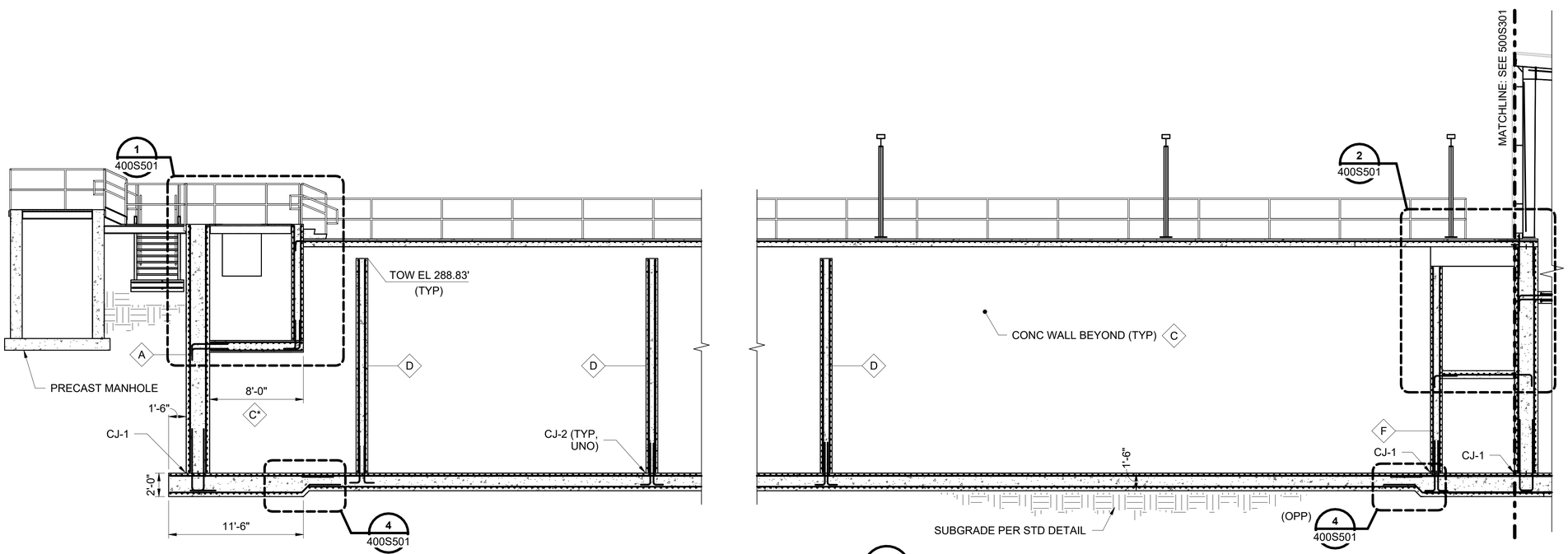

SECTION D 400S101

0 4' 8' 12'
SCALE IN FEET

GEORGIA REGISTERED No. SE001521 STRUCTURAL ENGINEER ALEX GRIFFIN

Alexander Griffin
Expires 2025.12.31
2024.06.26 11:38:00-05'00'

no.	date	by	ckd	description
0	06/26/24	SVW	AMG	ISSUED FOR CONSTRUCTION

BURNS McDONNELL
4004 SUMMIT BLVD. NE, SUITE 1200
ATLANTA, GA 30319
770-587-4776
LICENSEE NO. PEF000100
AUTHORIZATION NO. J550903

date	detailed
MARCH 30, 2023	S. WINGARD
designed	**checked**
S. WINGARD	J. KIENHOLZ

Perry

HOUSTON COUNTY, GEORGIA

EAST PERRY WWTF
PROCESS BASIN A SECTIONS SHEET 2

project	contract
148538	

drawing **400S302** — rev. **0**

sheet of sheets

file

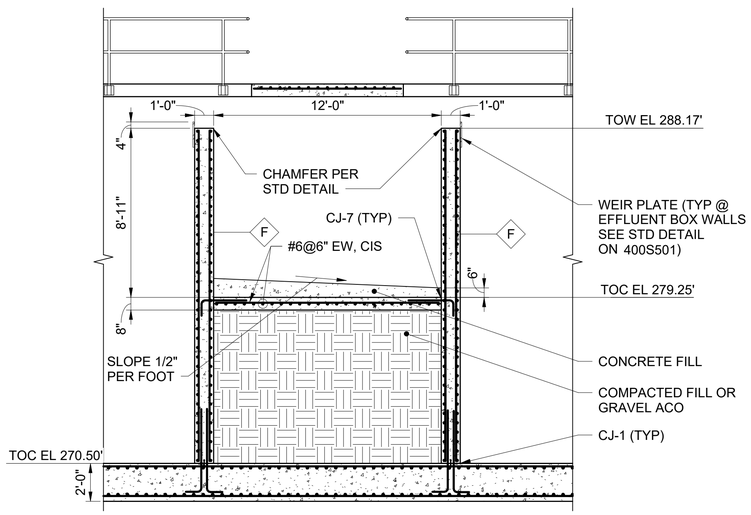

SECTION E 400S102

0 2' 4' 8'
SCALE IN FEET

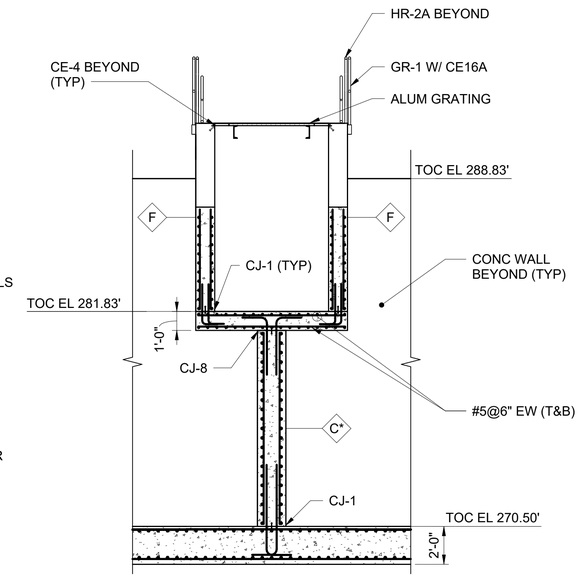

SECTION F 400S401

0 2' 4' 8'
SCALE IN FEET

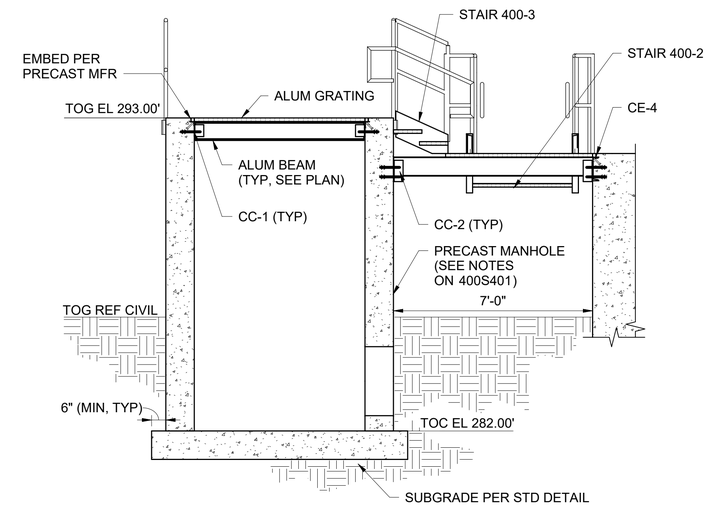

NOTE:
REINFORCEMENT NOT SHOWN FOR CLARITY

SECTION G 400S401

0 1' 2' 4'
SCALE IN FEET

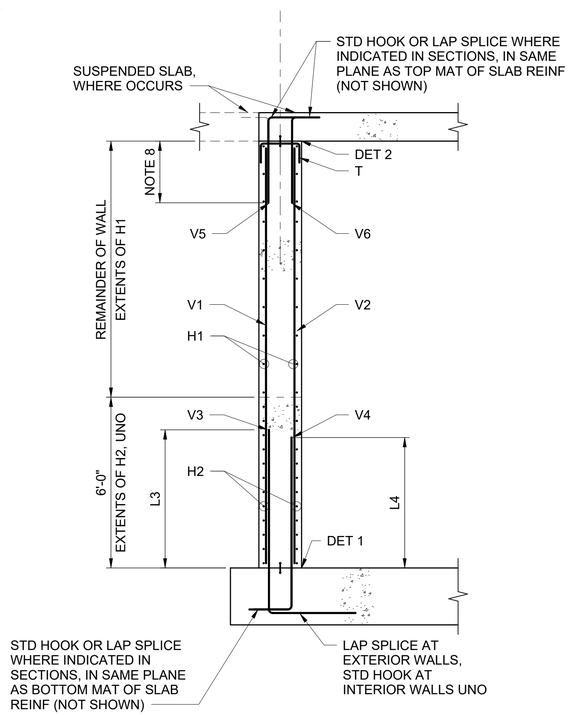

TYPICA WALL REINFORCING
NOT TO SCALE

TAG	V1	V2[2]	V3[2]	L3[7]	V4[3]	L4[7]	V5[4]	V6[5]	H1	H2[6]	T[8]	DET 1	DET 2[4]	NOTES
A	#6@12"		#6@6"	9'-0"	#6@6"	9'-0"	#5@6"		#7@6"	#8@6"		CJ-1	NOTE 9	PROCESS BASIN/SOLIDS HOLDING TYP EXTERIOR WALL
B	#8@12"		#8@6"	9'-6"	#8@6"	9'-6"	N/A		#7@6"	#8@6"		CJ-1	N/A	PROCESS BASIN WEST EXTERIOR WALL
B*	#8@12"						N/A		#7@6"	#8@6"		CJ-1	N/A	PROCESS BASIN WEST EXTERIOR WALL
C	#8@12"		#8@6"	8'-0"	#8@6"	8'-0"	#5@6"		#6@6"	#7@6"		CJ-1	CJ-8	PROCESS BASIN CENTER WALL
C*	#8@12"						#5@6"		#6@6"	#7@6"		CJ-1	CJ-8	PROCESS BASIN SHORT CENTER WALL
D	#5@6"						N/A		#5@6"	#6@6"		CJ-2	N/A	PROCESS BASIN BAFFLE WALLS
E	#8@12"		#8@6"	10'-6"	#8@6"	10'-6"	#5@6"		#7@6"	#8@6"		CJ-1	NOTE 9	PROCESS BASIN SOUTH & SOLIDS HOLDING NORTH/SOUTH EXTERIOR WALLS
F	#5@6"						N/A		#5@6"			CJ-1	N/A	INFLUENT/EFFLUENT BOX WALLS
G	#8@12"		#8@6"	10'-6"	#8@6"	10'-6"	N/A		#8@6"			CJ-1	N/A	SOLIDS HOLDING CENTER WALL
H	#6@6"						#5@6"		#7@6"	#8@6"		CJ-1	CJ-8	PROCESS BASIN/BLDG SHARED WALL
J	#6@6"						#5@6"		#6@6"			CJ-1	CJ-8	PROCESS BLDG EAST & WEST EXTERIOR WALLS
K	#7@6"						#5@6"		#6@6"			CJ-1	CJ-8	PROCESS BLDG SUMP INTERIOR WALL
L	#6@6"						#6@6"		#6@6"	#7@6"		CJ-1	CJ-9	PROCESS BLDG SOUTH EXTERIOR WALL

NOTES:
1. SEE S004 FOR TYPICAL EMBEDMENT AND SPLICE LENGTHS.
2. IF BLANK, MATCH V1.
3. IF BLANK, MATCH V2.
4. "N/A" = NOT APPLICABLE OR NOT REQUIRED.
5. IF BLANK, MATCH V5.
6. IF BLANK, MATCH H1.
7. IF BLANK, USE "OTHER" BAR SPLICE LENGTH+2".
8. TIES OF THE INDICATED BAR SIZE AT THE INDICATED SPACING WITH A STANDARD HOOK EACH END. IF BLANK, NOT REQUIRED.
9. IF WALKWAY OR SLAB AT TOP, CJ-9 IN ADDITION TO V5 & V6. IF NO TOP SLAB OR WALKWAY, NONE REQUIRED.
10. IF THE WALKWAY IS INSTALLED PRIOR TO THE LEAK TEST OF WALLS WITH THIS TAG, THEN THE "T" TIES ARE NOT REQUIRED.
11. EXTENTS OF V1 & V2 NOT REQUIRED TO EXTEND TO BOTTOM OF WALL.

GEORGIA REGISTERED No. SE001521 STRUCTURAL ENGINEER ALEX GRIFFIN

Alexander Griffin
Expires 2025.12.31
2024.06.26 11:38:22-05'00'

no.	date	by	ckd	description
0	06/26/24	SVW	AMG	ISSUED FOR CONSTRUCTION

BURNS McDONNELL
4004 SUMMIT BLVD. NE, SUITE 1200
ATLANTA, GA 30319
770-587-4776
LICENSEE NO. PEF000100
AUTHORIZATION NO. J550903

date	detailed
NOVEMBER 2, 2023	S. WINGARD
designed	**checked**
S. WINGARD	J. KIENHOLZ

Perry
HOUSTON COUNTY, GEORGIA

EAST PERRY WWTF
PROCESS BASIN A SECTIONS SHEET 3 AND WALL REINFORCING SCHEDULE

project 148538
contract
drawing 400S303 — **rev.** 0
sheet **of** **sheets**
file

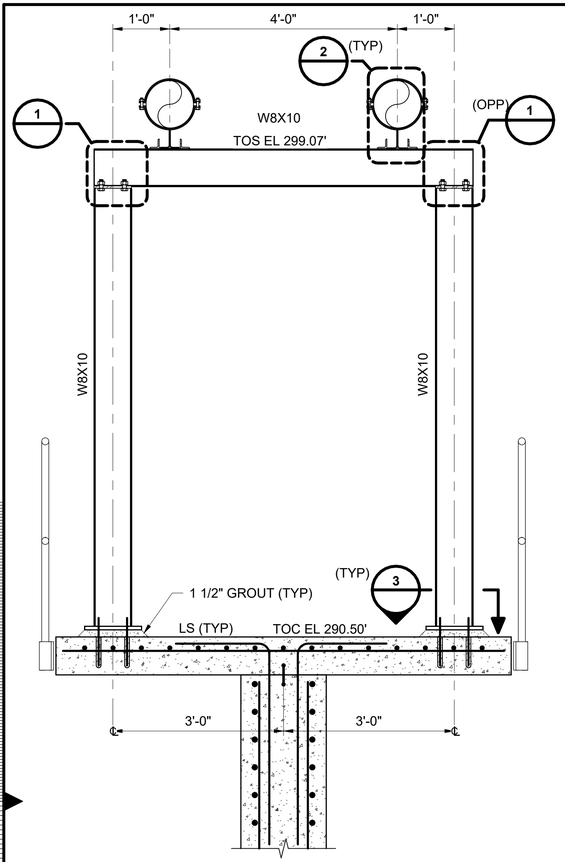

PS-401 A 400S102

SCALE IN FEET

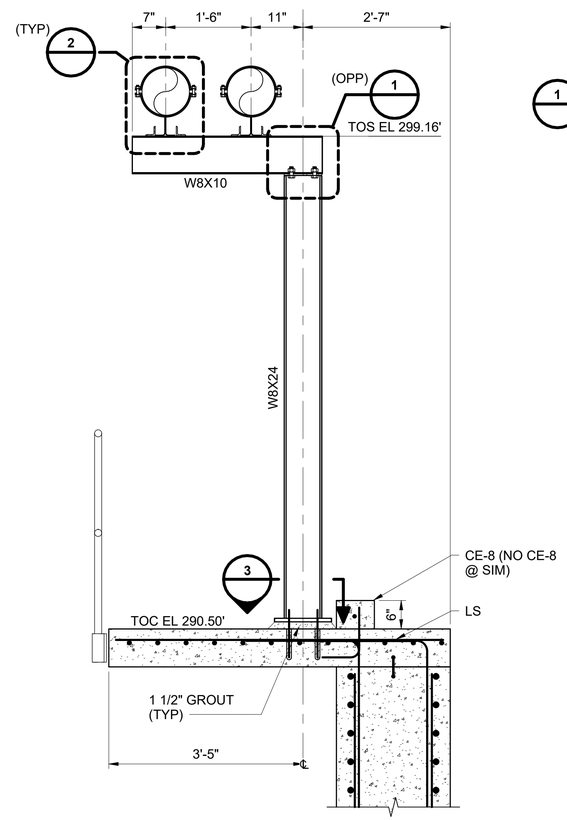

PS-402 B 400S102

SCALE IN FEET

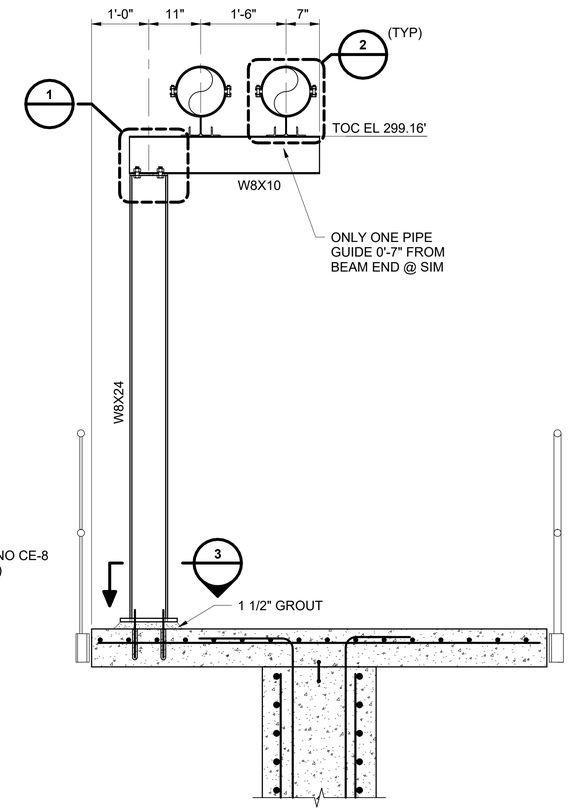

PS-403 C 400S102

SCALE IN FEET

NOTES:

1. SEE S000 SERIES FOR GENERAL NOTES, SPECIAL INSPECTION REQUIREMENTS AND STANDARD DETAILS.
2. ALL FRAMING ON THIS SHEET TO BE GALVANIZED STEEL, UNO. ALL BOLTS TO BE A307 AND GALVANIZED.

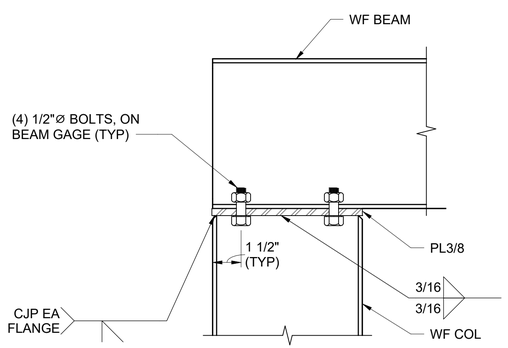

DETAIL 1

SCALE IN FEET

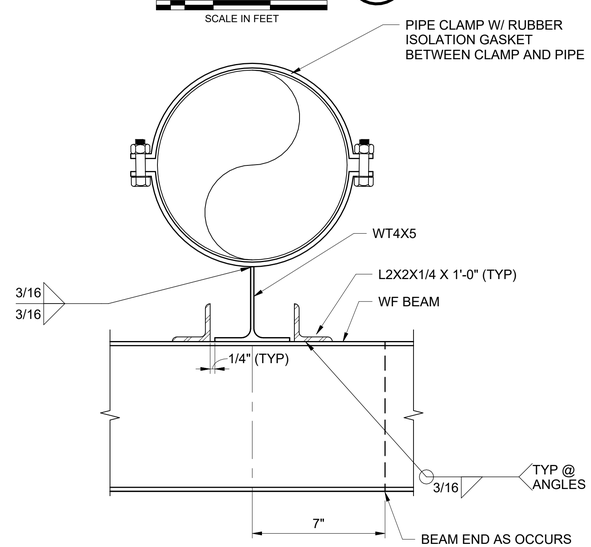

DETAIL 2

SCALE IN FEET

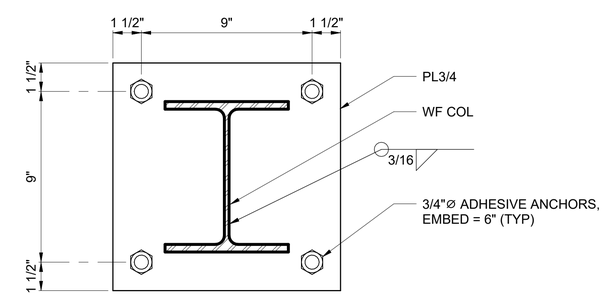

DETAIL 3

SCALE IN FEET

GEORGIA REGISTERED No. SE001521 STRUCTURAL ENGINEER ALEX GRIFFIN

Alexander Griffin
Expires 2025.12.31
2024.06.26 11:38:45-05'00'

no.	date	by	ckd	description
0	06/26/24	SVW	AMG	ISSUED FOR CONSTRUCTION

BURNS McDONNELL
4004 SUMMIT BLVD. NE, SUITE 1200
ATLANTA, GA 30319
770-587-4776
LICENSEE NO. PEF000100
AUTHORIZATION NO. J550903

date	detailed
FEBRUARY 14, 2024	S. WINGARD
designed	**checked**
S. WINGARD	J. KIENHOLZ

Perry

HOUSTON COUNTY, GEORGIA

EAST PERRY WWTF

PROCESS BASIN A PIPE SUPPORT SECTIONS AND DETAILS

project	contract
148538	

drawing **400S304** — rev. **0**

sheet of sheets

file

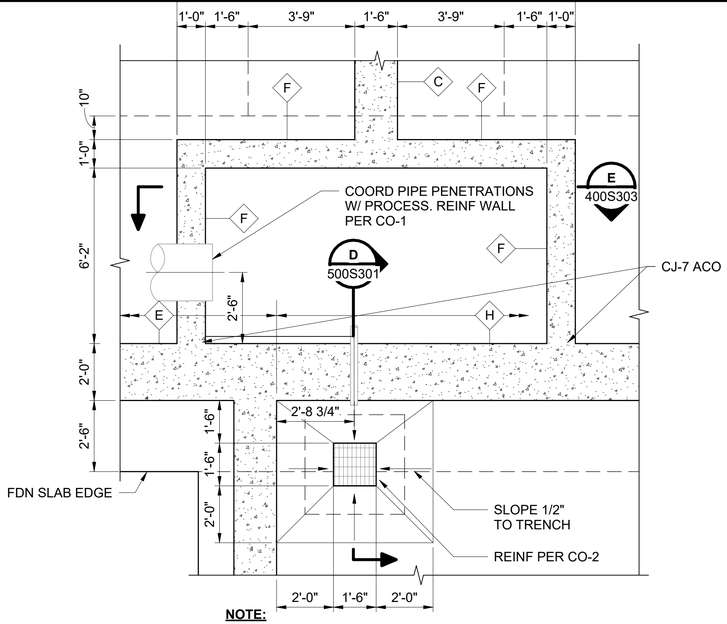

NOTE:
MATCHLINE NOT SHOWN FOR CLARITY

ENLARGED FOUNDATION PLAN 1 / 400S101

0 2' 4' 6'
SCALE IN FEET

NORTH

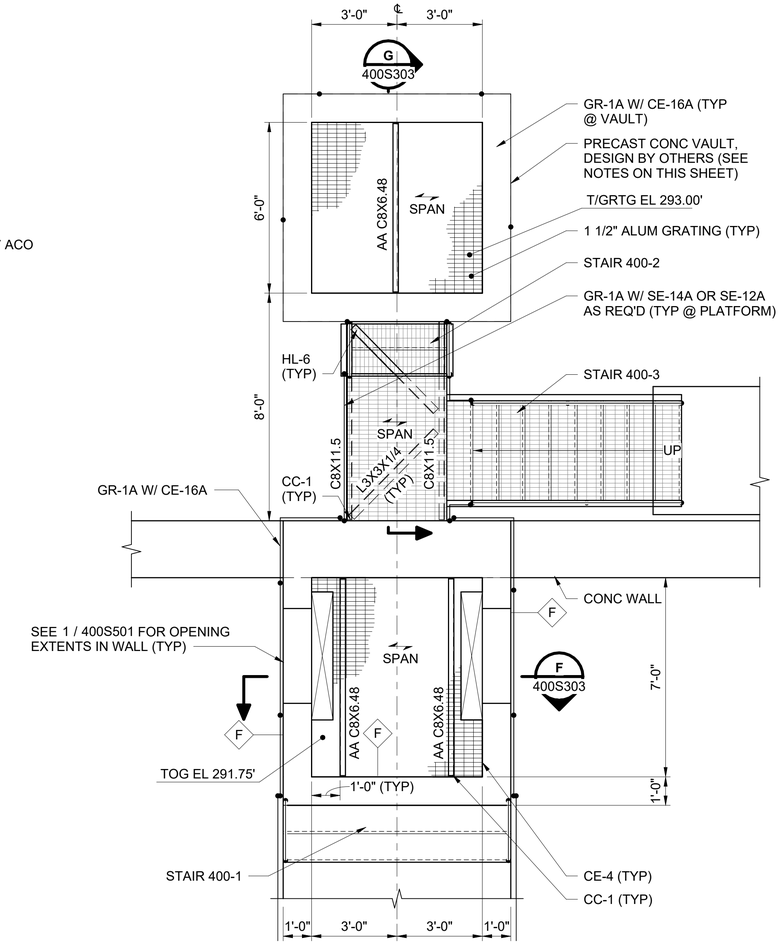

ENLARGED TOP PLAN 2 / 400S102

0 2' 4' 6'
SCALE IN FEET

NORTH

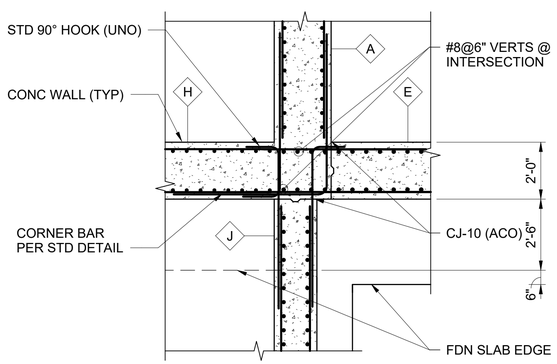

NOTES:

1. SEE WALL REINF SCHEDULE ON 400S303
2. MATCHLINE NOT SHOWN FOR CLARITY

ENLARGED FOUNDATION PLAN 3 / 400S101

0 2' 4' 6'
SCALE IN FEET

NORTH

NOTES:

1. SEE S000 SERIES FOR GENERAL NOTES, SPECIAL INSPECTION REQUIREMENTS AND STANDARD DETAILS.
2. ALL FRAMING ON THIS SHEET TO BE ALUMINUM, UNO. ALL BOLTS TO BE 316 SST, UNO.

(X) DENOTES WALL TAG. SEE TYP DETAIL ON 400S303 FOR REINF.

GENERAL NOTES FOR PRECAST VAULT:

1. DESIGN OF THE PRECAST STRUCTURE SHALL BE PREPARED BY A STRUCTURAL ENGINEER LICENSED IN THE STATE OF GEORGIA. SUBMIT SEALED DRAWINGS AND CALCULATIONS TO ENGINEER FOR APPROVAL.
2. MATERIALS:
   A. CONCRETE:
      a. PRECAST: f'c = 5000 PSI @ 28 DAYS
      b. REFERENCE SPECIFICATION 03 30 00.
      c. SUBMIT MIX DESIGN TO ENGINEER FOR APPROVAL.
   B. REINFORCING STEEL: SEE GENERAL NOTES ON S000 SERIES
3. DESIGN LOADS:
   A. PRECAST MANUFACTURER SHALL DESIGN STAINLESS STEEL EMBED FOR ALUMINUM GRATING, WALLS AND BASE SLAB ACCORDING TO IN PLACE REQUIREMENTS BELOW, AS WELL AS, FOR LOADS APPLIED DURING TRANSIT AND INSTALLATION. SLAB AND WALL THICKNESS SHALL BE MINIMUM 6 INCHES.
   B. GRATING SUPPORT EMBED:.
      a. SELF WEIGHT OF GRATING AND SUPPORT BEAM
      b. UNIFORM LIVE LOAD: 150 PSF
   C. WALLS:
      a. EMPTY VAULT + AT-REST LATERAL EARTH PRESSURE:
         • LATERAL EARTH PRESSURE = 62 PCF COMBINED WITH
         • SURCHARGE LOAD = 200 PSF VERTICAL, 100 PSF LATERAL
         • STRUCTURES SHALL BE ASSUMED EMPTY.
      b. INTERIOR FLUID DENSITY = 65 PCF
         • STRUCTURES SHALL BE ASSUMED FULL TO TOP WITHOUT BACKFILL IN PLACE
   D. STRUCTURE SHALL BE DESIGNED TO WITHSTAND BUOYANCY WITH A SAFETY FACTOR OF 1.10
      a. GROUND WATER ELEVATION SHOULD BE ASSUMED AT GRADE EL = 286'.
      b. BUOYANCY SHALL BE RESISTED BY THE STRUCTURE SELF WEIGHT, WEIGHT OF SOIL ABOVE THE FOOTING TOE AND AN EFFECTIVE SOIL WEDGE EXTENDING UP FROM THE BASE AT 20 DEGREES FROM THE VERTICAL.
   E. NET ALLOWABLE BEARING CAPCITY = 3000 PSF
4. PRECAST BASE SLAB TO WALL JOINT SHALL BE DESIGNED BY PRECAST MANUFACTURER. THE PRECAST BASE SLAB SHALL BE DESIGNED FOR BUOYANCY AND BEARING.
5. UNITS SHALL BE CONSTRUCTED MONOLITHICALLY OR WITH ASSEMBLED SECTIONS WITH TONGUE-AND-GROOVE JOINTS. CONSEAL CS202, OR ENGINEER APPROVED EQUAL, SHALL BE PLACED AT EACH JOINT. JOINT BETWEEN RISER AND BASE SHALL BE PER PRECAST MANUFACTURERS REQUIREMENTS, UNLESS INDICATED OTHERWISE. ALL JOINTS SHALL INCLUDE POSITIVE CONNECTIONS AS REQUIRED TO RESIST BUOYUANT FORCES.
6. WRAP ALL JOINT IN VERTICAL SECTIONS WITH CONSEAL CS212 OR ENGINEER APPROVED EQUAL.

GEORGIA REGISTERED No. SE001521 STRUCTURAL ENGINEER ALEX GRIFFIN

Alexander Griffin
Expires 2025.12.31
2024.06.26 11:39:03-05'00'

no.	date	by	ckd	description
0	06/26/24	SVW	AMG	ISSUED FOR CONSTRUCTION

BURNS McDONNELL
4004 SUMMIT BLVD. NE, SUITE 1200
ATLANTA, GA 30319
770-587-4776
LICENSEE NO. PEF000100
AUTHORIZATION NO. J550903

date	detailed
MARCH 11, 2024	S. WINGARD
designed	**checked**
S. WINGARD	J. KIENHOLZ

Perry
HOUSTON COUNTY, GEORGIA

EAST PERRY WWTF
PROCESS BASIN A ENLARGED PLANS

project	contract
148538	

drawing **400S401** — rev. **0**

sheet of sheets
file

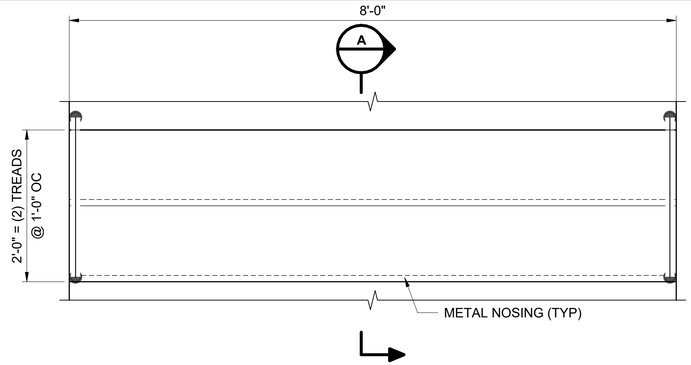

400-1 STAIR PLAN

0 1/2' 1' 2'
SCALE IN FEET

NORTH

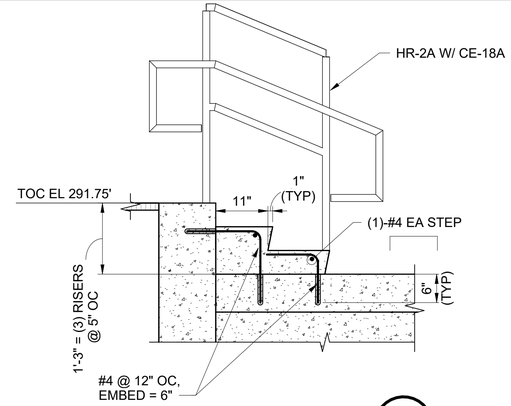

SECTION A

0 1/2' 1' 2'
SCALE IN FEET

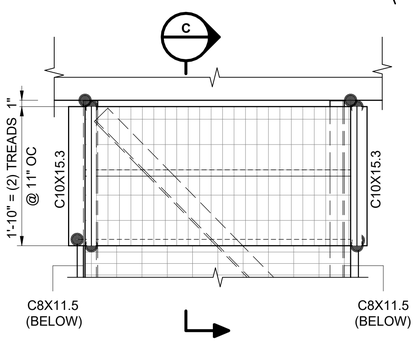

400-2 STAIR PLAN

0 1/2' 1' 2'
SCALE IN FEET

NORTH

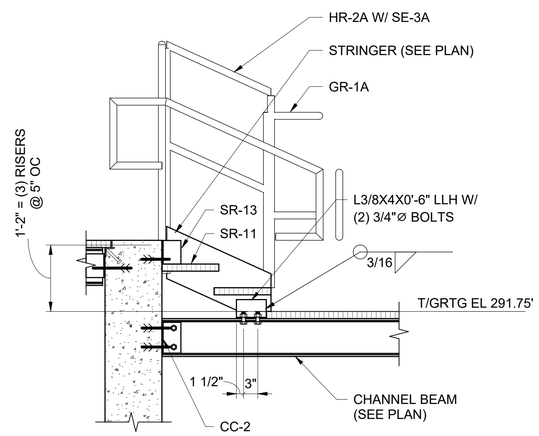

SECTION C

0 1/2' 1' 2'
SCALE IN FEET

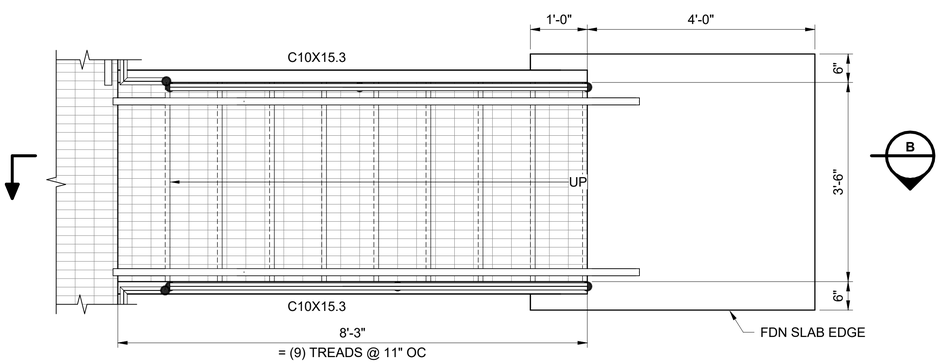

400-3 STAIR PLAN

0 1/2' 1' 2'
SCALE IN FEET

NORTH

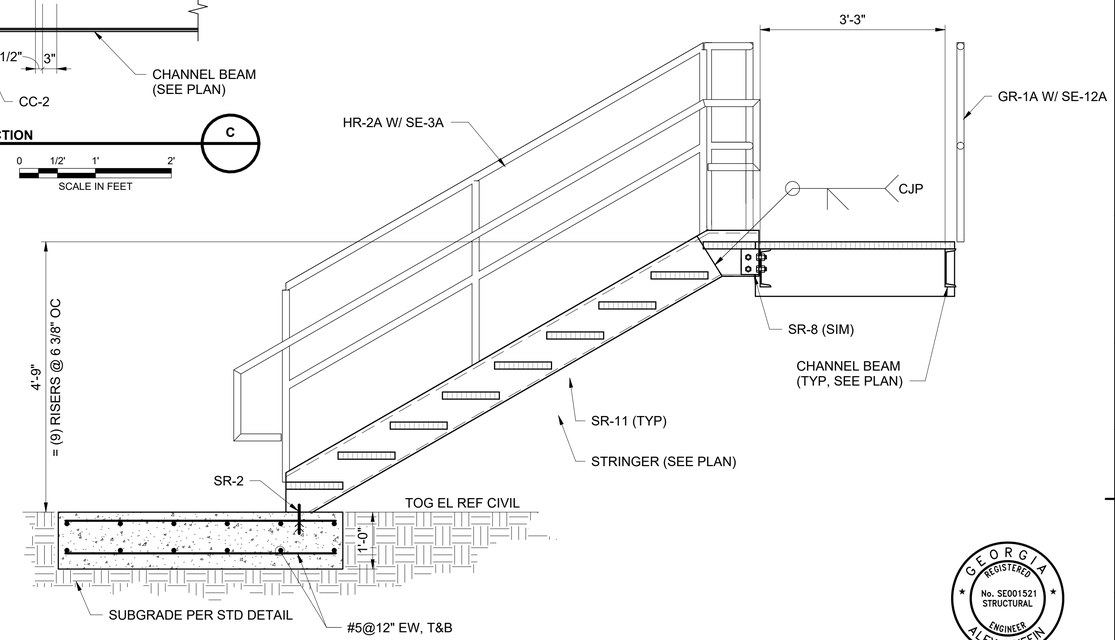

SECTION B

0 1' 2' 3'
SCALE IN FEET

NOTES:

1. SEE S000 SERIES FOR GENERAL NOTES, SPECIAL INSPECTION REQUIREMENTS AND STANDARD DETAILS.
2. ALL FRAMING ON THIS SHEET TO BE GALVANIZED STEEL, UNO. ALL BOLTS TO BE A307 AND GALVANIZED.

GEORGIA REGISTERED No. SE001521 STRUCTURAL ENGINEER ALEX GRIFFIN

Alexander Griffin
Expires 2025.12.31
2024.06.26 11:39:42-05'00'

no.	date	by	ckd	description
0	06/26/24	SVW	AMG	ISSUED FOR CONSTRUCTION

BURNS McDONNELL
4004 SUMMIT BLVD. NE, SUITE 1200
ATLANTA, GA 30319
770-587-4776
LICENSEE NO. PEF000100
AUTHORIZATION NO. J550903

date	detailed
MARCH 15, 2024	S. WINGARD
designed	**checked**
A. WINGARD	J. KIENHOLZ

Perry
HOUSTON COUNTY, GEORGIA

EAST PERRY WWTF
PROCESS BASIN STAIR PLAN AND DETAILS

project	contract
148538	

drawing **400S402** – rev. **0**

sheet of sheets

file

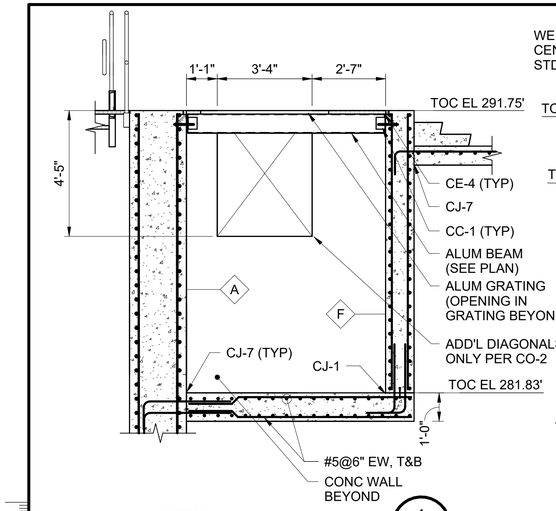

DETAIL 1 / 400S302

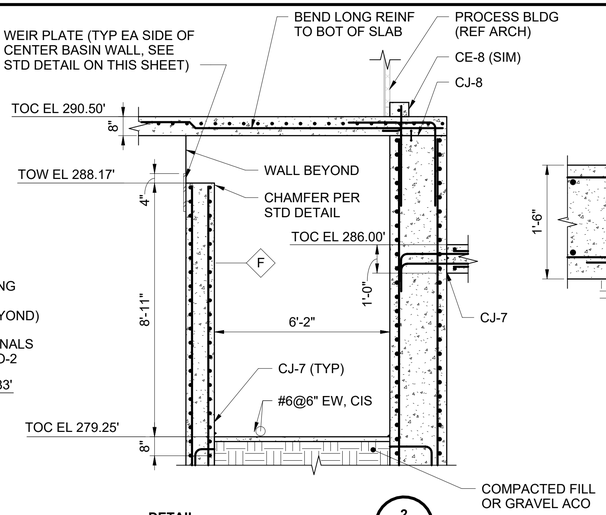

DETAIL 2 / 400S302

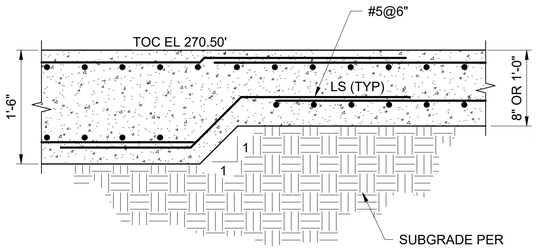

DETAIL 3 / 400S301

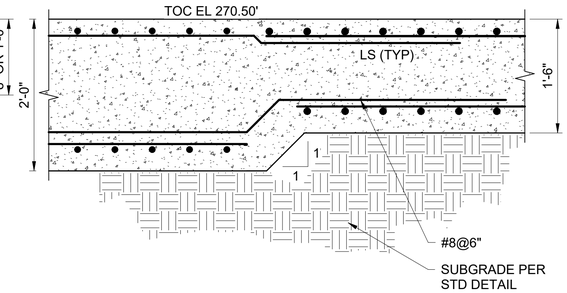

DETAIL 4 / 400S301

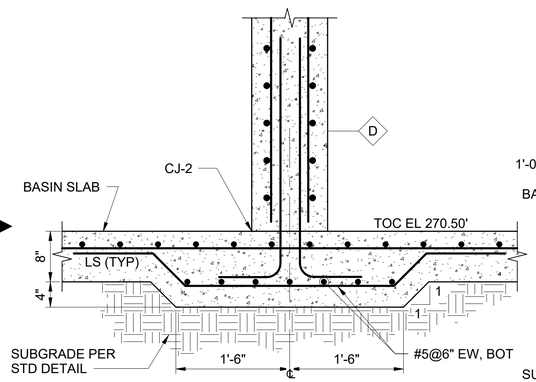

DETAIL 5 / 400S302

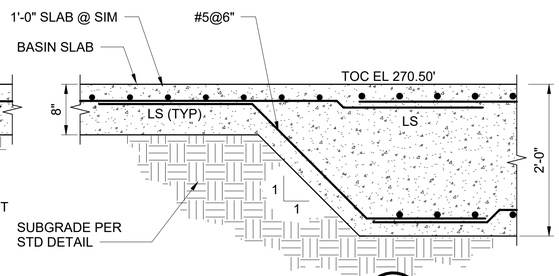

DETAIL 6 / 400S302

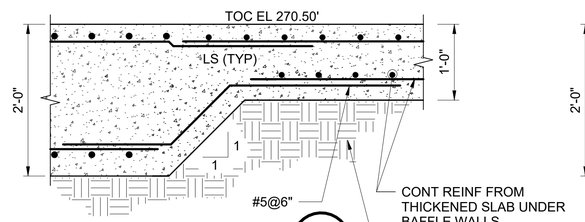

DETAIL 7 / 400S302

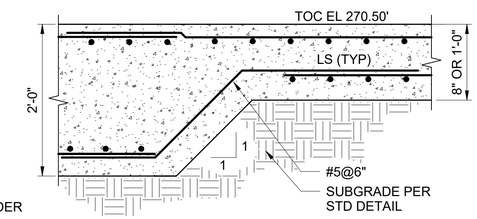

DETAIL 8 / 400S301

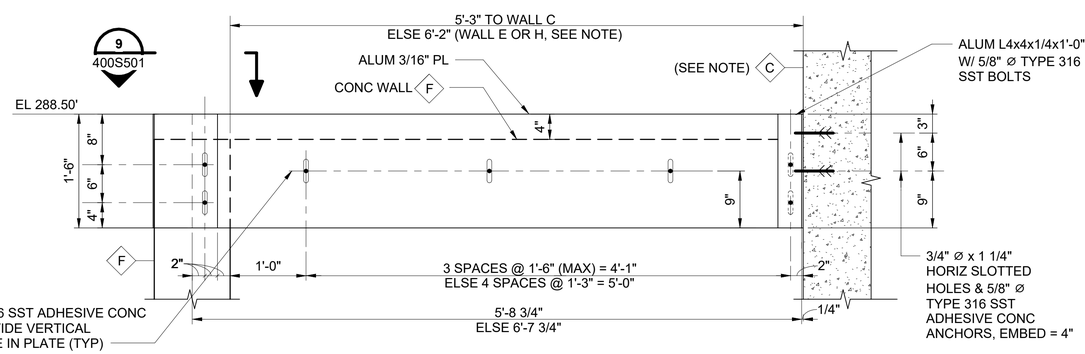

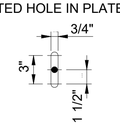

NOTE:

1. WEIR PLATE SPANNING EAST/WEST CONNECTS TO WALL C (CENTER BASIN WALL) AND WEIR PLATE SPANNING NORTH/SOUTH CONNECTS TO WALL E, WEST OF THE CENTER BASIN WALL, AND CONNECTS TO WALL H, EAST OF THE CENTER BASIN WALL. NORTH/SOUTH SPAN DIMENSIONS ARE DENOTED BY 'ELSE'.

TYPICAL WEIR PLATE DETAIL
NOT TO SCALE

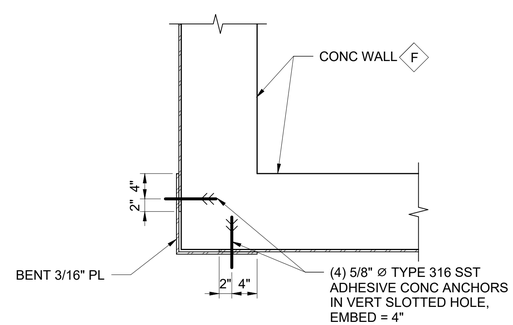

SECTION 9 / 400S501
NOT TO SCALE

GEORGIA REGISTERED No. SE001521 STRUCTURAL ENGINEER ALEX GRIFFIN

Alexander Griffin
Expires 2025.12.31
2024.06.26 11:39:59-05'00'

no.	date	by	ckd	description
0	06/26/24	SVW	AMG	ISSUED FOR CONSTRUCTION

BURNS McDONNELL
4004 SUMMIT BLVD. NE, SUITE 1200
ATLANTA, GA 30319
770-587-4776
LICENSEE NO. PEF000100
AUTHORIZATION NO. J550903

date	detailed
NOVEMBER 2, 2023	S. WINGARD
designed	**checked**
S. WINGARD	J. KIENHOLZ

Perry
HOUSTON COUNTY, GEORGIA

EAST PERRY WWTF
PROCESS BASIN A DETAILS

project	contract
148538	

drawing **400S501** – rev. **0**
sheet of sheets
file

STRUCTURAL DESIGN LOADING/CRITERIA

1. FOR GENERAL LOADING CRITERIA APPLICABLE TO ALL STRUCTURES, SEE SHEET S002.
2. DEAD LOADS:
   A. SELF WEIGHT OF MATERIALS OF CONSTRUCTION
   B. WEIGHT OF FIXED SERVICE EQUIPMENT
      a. AS INDICATED ON THE STRUCTURAL DRAWINGS FOR EQUIPMENT WEIGHING IN EXCESS OF 300 LBS. FRAMING AND FOUNDATIONS ARE DESIGNED FOR EQUIPMENT WHICH SATISFIES THE CONTRACT SPECIFICATIONS.
      b. IF EQUIPMENT FURNISHED IS HEAVIER THAN THE WEIGHTS INDICATED, OR REQUIRES STRUCTURAL CHANGES FOR ANY OTHER REASON, PROVIDE ENGINEERING DESIGN CALCULATIONS AND ADDITIONAL STRUCTURAL WORK NECESSARY TO SUPPORT ALL LOADS IN ACCORDANCE WITH THE DESIGN STANDARDS SPECIFIED ABOVE, AT NO ADDITIONAL COST TO THE OWNER AND WITH NO INCREASE IN CONTRACT TIME.
   C. SUPERIMPOSED DEAD LOAD..... 10 PSF
   D. EQUIPMENT LOAD
      a. BLOWERS..... 5000 LB
      b. SEE MECHANICAL, ELECTRICAL AND PROCESS
3. LIVE LOADS:
   A. STAIRS, WALKWAYS, PLATFORMS..... 150 PSF, UNIFORM
      300 LB, CONCENTRATED
   B. PUMP AND ELECTRICAL ROOMS..... 250 PSF
4. ROOF LIVE LOAD:..... 20 PSF
5. WIND DESIGN DATA:
   A. INTERNAL PRESSURE COEFFICIENT..... ±0.55
   B. COMPONENTS AND CLADDING LOADS..... SEE DIAGRAM ON THIS SHEET
      a. COMPONENT AND CLADDING LOADS SHOWN ARE FOR BUILDING COMPONENTS OUTSIDE THE SCOPE OF THE PRE-ENGINEERED METAL BUILDING SYSTEM. PRE-EGINEERED METAL BUILDING SYSTEM MANUFACTURER SHALL BE RESPONSIBLE FOR DEVELOPING ALL COMPONENT AND CLADDING LOADS FOR DESIGN OF THE BUILDING INCLUDING SECONDARY MEMBERS AND WALL AND ROOF COVERINGS.
6. SEISMIC DESIGN DATA:
   A. BASIC SEISMIC FORCE RESISTING SYSTEM: DELEGATED DESIGN BY THE PRE-ENGINEERED METAL BUILDING MANUFACTURER
   B. SEE DRAWING 100S002 FOR SEISMIC ACCELERATIONS
7. GEOTECHNICAL DATA:
   A. DESIGN LOAD BEARING VALUE..... 2,500 PSF (NET)

PRE-ENGINEERED METAL BUILDING SYSTEMS

1. THE PROCESS BUILDING IS A DELEGATED DESIGN, PREFABRICATED METAL BUILDING SYSTEM. REFER TO PROJECT SPECIFICATIONS.
2. DESIGN, FABRICATE, AND ERECT METAL BUILDINGS SYSTEMS IN ACCORDANCE WITH MBMA METAL BUILDING SYSTEMS MANUAL AS MODIFIED BY CONTRACT DOCUMENTS.
3. SUBMIT SHOP DRAWINGS AND STRUCTURAL DESIGN ANALYSIS OF METAL BUILDINGS SYSTEM PREPARED AND SEALED BY QUALIFIED STRUCTURAL ENGINEER LICENSED IN THE STATE OF GEORGIA.
   A. INCLUDE DEVELOPMENT OF LOADS, DESCRIPTION OF INDIVIDUAL AND COMBINED LOAD CASES, DESCRIPTION OF MATERIALS, COMPARISON OF PERMITTED STRESSES VERSUS COMPUTED STRESSES, CALCULATION OF DEFLECTIONS, AND ANCHOR ROD LAYOUT.
   B. DESIGN ANCHORAGE CONNECTIONS OF THE METAL BUILDING SYSTEM TO TRANSMIT ONLY VERTICAL AND HORIZONTAL FORCES (NO MOMENTS) TO THE FOUNDATIONS. SUBMIT SERVICE-LEVEL REACTIONS AT EACH ANCHORAGE CONNECTION IN ALL THREE PRINCIPAL DIRECTIONS FOR EACH INDIVIDUAL (NOT COMBINED) LOAD CASE, SUCH AS DEAD, COLLATERAL, FLOOR LIVE, ROOF LIVE, WIND, EARTHQUAKE, ETC.
   C. THE FOUNDATION AND ANCHOR BOLT LAYOUT SHOWN ON THESE DRAWINGS IS BASED ON THE COLUMN REACTIONS SHOWN AND ON INFORMATION PROVIDED BY VARCO PRUDEN BUILDINGS.
   D. DO NOT CONSTRUCT FOUNDATIONS OR FABRICATE FOUNDATION REINFORCING STEEL UNTIL METAL BUILDING SYSTEM SHOP DRAWINGS AND DESIGN ANALYSIS ARE APPROVED. WHERE SUBMITTED REACTIONS EXCEED ASSUMED REACTIONS AS INDICATED IN NOTE 7, FOUNDATIONS ARE SUBJECT TO CHANGE. CONTACT ENGINEER.
4. PROVIDE ANCHOR RODS OF SIZE, QUANTITY, AND LAYOUT REQURED BY METAL BUILDING MANUFACTURER. OBTAIN PRIOR APPROVAL OF ENGINEER IF THESE ADJUSTMENTS REQUIRED CHANGING ANY STRUCTURAL OR ARCHITECTURAL DIMENSIONS OR DETAILS.
5. PROVIDE PRETENSIONED BOLTS FOR PRIMARY FRAME CONNECTIONS.
6. PROVIDE ADDITIONAL FRAMING AROUND WALL AND ROOF OPENINGS, AND WHERE REQUIRED TO SUPPORT AND BRACE SUSPENDED ITEMS SUCH AS DUCTWORK, PIPING, LIGHTING, EQUIPMENT, ETC.
7. BUILDING COLUMN REACTIONS (ALLOWABLE LEVEL):
   END FRAMES:
      MAX VERTICAL: 9.0 KIPS
      MIN VERTICAL: -3.0 KIPS
      MAX HORIZONTAL: 3.0 KIPS
   INTERIOR FRAMES:
      MAX VERTICAL: 13.0 KIPS
      MIN VERTICAL: -7.0 KIPS
      MAX HORIZONTAL: 5.5 KIPS
   WIND COLUMNS:
      MAX VERTICAL: 9.0 KIPS
      MIN VERTICAL: -3.0 KIPS
      MAX HORIZONTAL: 3.0 KIPS

COMPONENTS & CLADDING SCHEDULE (PSF)

PER ASCE 7-16 FIGURE 30.3-1 & FIGURE 30.3-2A & FIGURE 30.3-3

EFFECTIVE AREA	ZONE 2		ZONE 3		ZONE 4		ZONE 5	
A ≤ 10 ft2	25.32	-78.85	25.32	-103.75	43.19	-46.17	43.19	-67.02
A = 20 ft2	23.83	-74.44	23.83	-94.93	41.70	-44.68	41.70	-67.02
A = 50 ft2	22.94	-68.61	22.94	-83.26	40.21	-43.19	40.21	-61.06
A = 100 ft2	22.34	-64.19	22.34	-74.44	37.83	-40.21	37.83	-55.11
A ≥ 500 ft2	22.34	-53.95	22.34	-53.95	34.26	-37.23	34.26	-37.23

NOTES:
1. POSITIVE PRESSURES ACTING TOWARDS SURFACE, NEGATIVE PRESSURES ACTING AWAY FROM SURFACE.
2. INTERPOLATION CAN BE USED FOR EFFECTIVE AREAS THAT ARE BETWEEN THOSE VALUES SHOWN.
3. VALUES LISTED ARE ULTIMATE VALUES. REDUCE TO ALLOWABLE LOADS WITH A FACTOR 0.6.
4. "0.2h" = 4.6 FT. "0.6h" = 13.8 FT. "a" = 3.0 FT.
5. EACH COMPONENT MUST BE DESIGNED FOR MAXIMUM POSITIVE AND NEGATIVE PRESSURES.

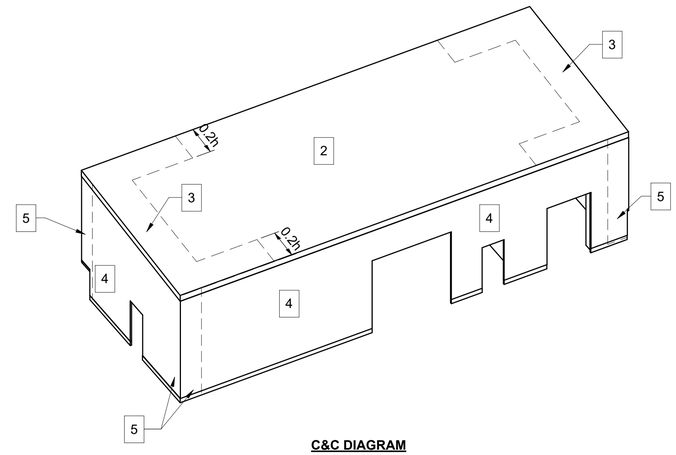

C&C DIAGRAM
NOT TO SCALE

GEORGIA REGISTERED No. SE001521 STRUCTURAL ENGINEER ALEX GRIFFIN

Alexander Griffin
Expires 2025.12.31
2024.06.26 11:40:14-05'00'

no.	date	by	ckd	description
0	06/26/24	SVW	AMG	ISSUED FOR CONSTRUCTION

BURNS McDONNELL
4004 SUMMIT BLVD. NE, SUITE 1200
ATLANTA, GA 30319
770-587-4776
LICENSEE NO. PEF000100
AUTHORIZATION NO. J550903

date	detailed
MARCH 28, 2023	S. WINGARD
designed	**checked**
S. WINGARD	J. KIENHOLZ

Perry

HOUSTON COUNTY, GEORGIA

EAST PERRY WWTF
PROCESS BUILDING A LOAD MAPS

project	contract
148538	

drawing **500S100** – rev. **0**

sheet of sheets

file

NOTES:

1. SEE S000 SERIES FOR GENERAL NOTES, SPECIAL INSPECTION REQUIREMENTS AND STANDARD DETAILS.
2. INTERIOR WALLS AND TOP SLAB SHALL ACHIEVE DESIGN STRENGTH AS DEMONSTRATED BY CYLINDER TESTING PRIOR TO BACKFILL.
3. APPLY CRYSTALLINE WATERPROOFING COATING TO DRY SPACE OF SHARED WALLS WHERE NOTED. XYPEX CONCENTRATE OR EUCLID VANDEX SUPER.

(X) DENOTES WALL TAG. SEE TYP DETAIL ON 400S303 FOR REINF.

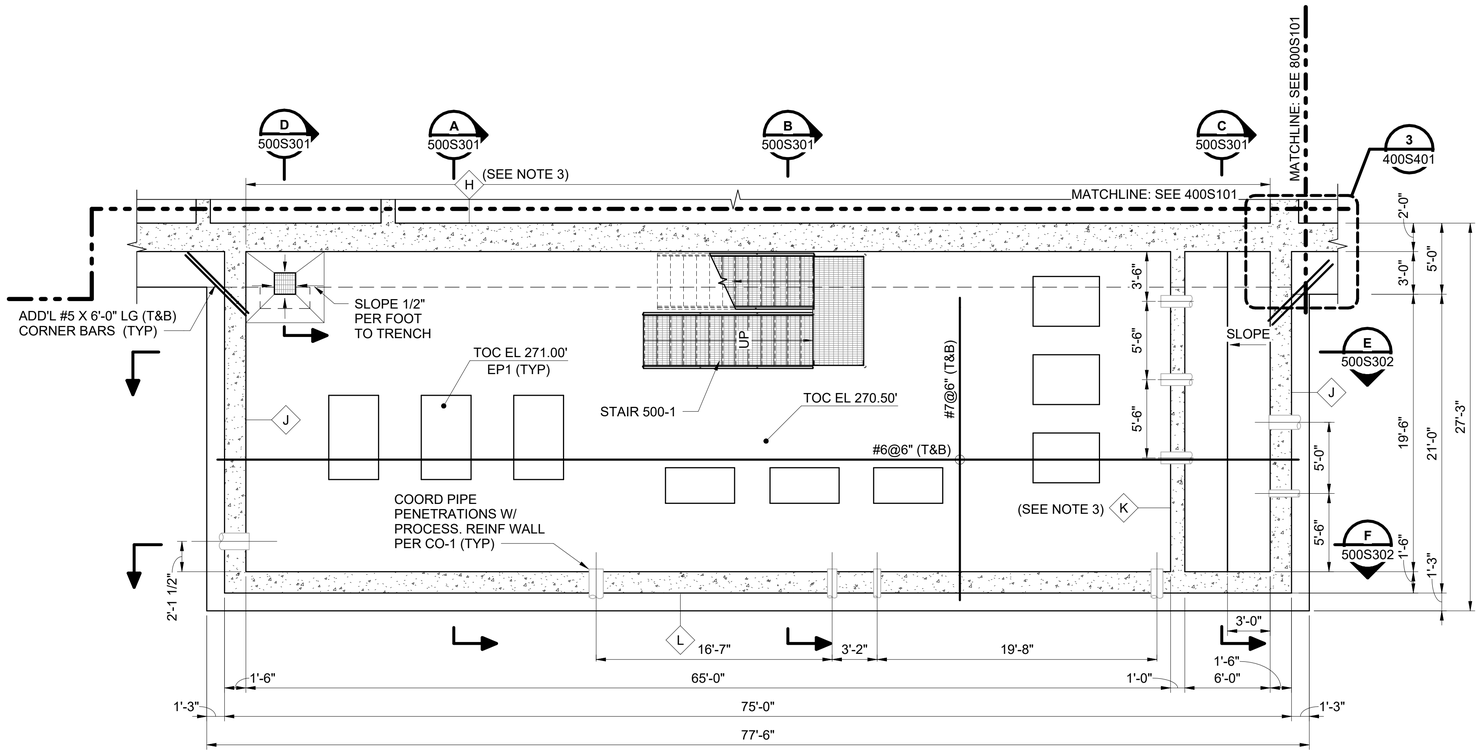

FOUNDATION PLAN

0 4' 8' 12'
SCALE IN FEET

NORTH

no.	date	by	ckd	description
0	06/26/24	SVW	AMG	ISSUED FOR CONSTRUCTION

GEORGIA REGISTERED No. SE001521 STRUCTURAL ENGINEER ALEX GRIFFIN

Alexander Griffin
Expires 2025.12.31
2024.06.26 11:40:30-05'00'

BURNS McDONNELL
4004 SUMMIT BLVD. NE, SUITE 1200
ATLANTA, GA 30319
770-587-4776
LICENSEE NO. PEF000100
AUTHORIZATION NO. J550903

date	detailed
APRIL 10, 2023	S. WINGARD
designed	**checked**
S. WINGARD	J. KIENHOLZ

Perry
HOUSTON COUNTY, GEORGIA

EAST PERRY WWTF
PROCESS BUILDING A FOUNDATION PLAN

project	contract
148538	

drawing **500S101** — rev. **0**

sheet of sheets

file

NOTES:

1. SEE S000 SERIES FOR GENERAL NOTES, SPECIAL INSPECTION REQUIREMENTS AND STANDARD DETAILS.

DENOTES PROPOSED BRACED FRAME BAYS.

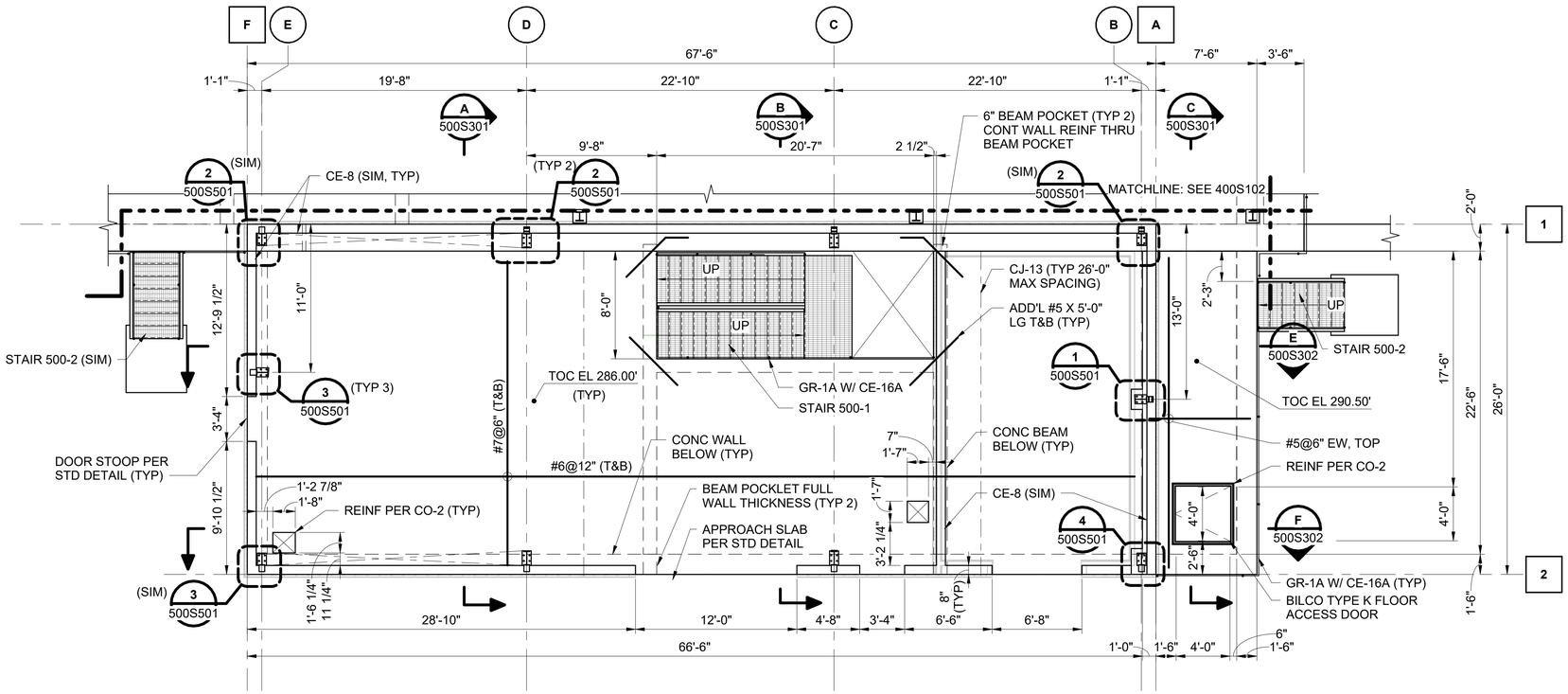

UPPER LEVEL PLAN

0 4' 8' 12'
SCALE IN FEET

NORTH

no.	date	by	ckd	description
0	06/26/24	SVW	AMG	ISSUED FOR CONSTRUCTION

BURNS McDONNELL
4004 SUMMIT BLVD. NE, SUITE 1200
ATLANTA, GA 30319
770-587-4776
LICENSEE NO. PEF000100
AUTHORIZATION NO. J550903

date	detailed
APRIL 10, 2023	S. WINGARD
designed	**checked**
S. WINGARD	J. KIENHOLZ

Perry

HOUSTON COUNTY, GEORGIA

GEORGIA REGISTERED No. SE001521 STRUCTURAL ENGINEER ALEX GRIFFIN

Alexander Griffin
Expires 2025.12.31
2024.06.26 11:41:25-05'00'

EAST PERRY WWTF
PROCESS BUILDING A UPPER LEVEL PLAN

project	contract
148538	

drawing **500S102** – rev. **0**

sheet of sheets

file

NOTES:

1. SEE S000 SERIES FOR GENERAL NOTES, SPECIAL INSPECTION REQUIREMENTS AND STANDARD DETAILS.
2. PEMB MANUFACTURER TO PROVIDE ADDITIONAL BEAMS PER THIS ROOF PLAN FOR PIPE SUPPORT HANGERS. SEE PROCESS FOR PIPE SUPPORT EXACT LOCATION, TYPE AND SIZES.

DENOTES PROPOSED BRACED FRAME BAYS.

DENOTES APPROXIMATE HANGER PIPE SUPPORT LOCATION. MAX VERTICAL LOAD = 2 KIP (EA LOC)

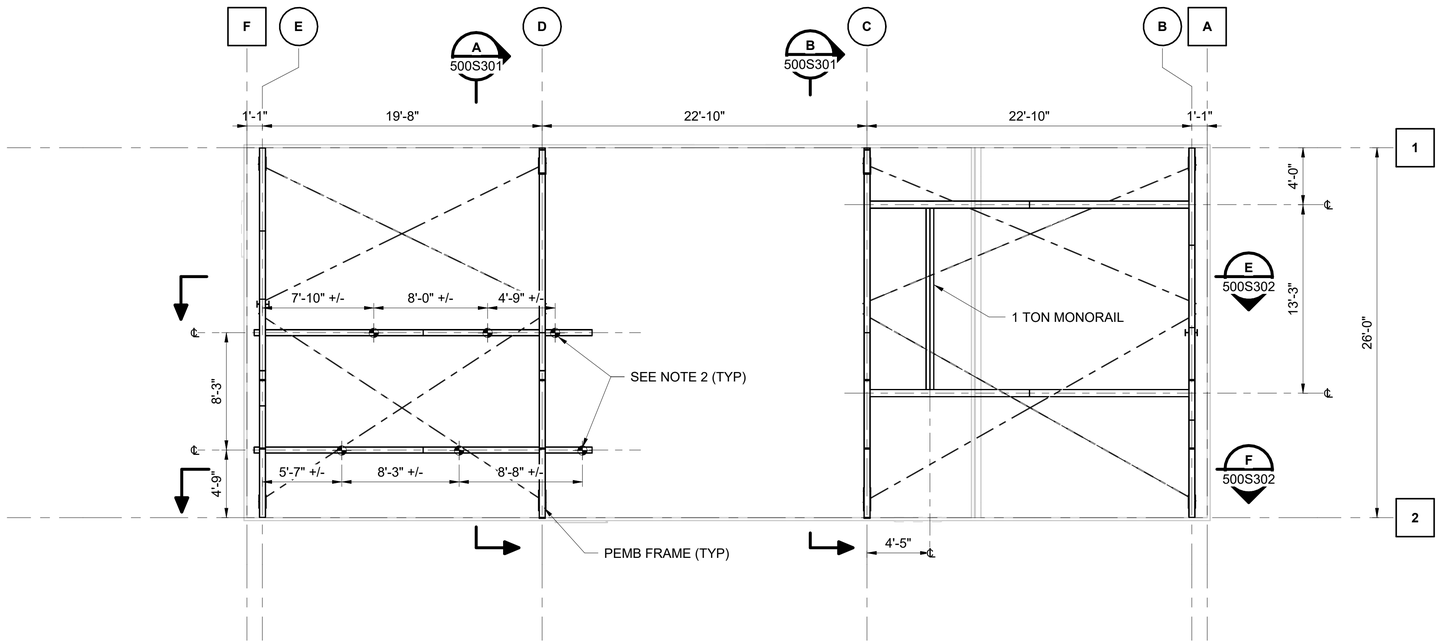

ROOF PLAN

0 2' 4' 6'
SCALE IN FEET

NORTH

no.	date	by	ckd	description
0	06/26/24	SVW	AMG	ISSUED FOR CONSTRUCTION

BURNS McDONNELL
4004 SUMMIT BLVD. NE, SUITE 1200
ATLANTA, GA 30319
770-587-4776
LICENSEE NO. PEF000100
AUTHORIZATION NO. J550903

date	detailed
APRIL 4, 2023	S. WINGARD
designed	**checked**
S. WINGARD	J. KIENHOLZ

Perry
HOUSTON COUNTY, GEORGIA

GEORGIA REGISTERED No. SE001521 STRUCTURAL ENGINEER ALEX GRIFFIN

Alexander Griffin
Expires 2025.12.31
2024.06.26 11:41:51-05'00'

EAST PERRY WWTF
PROCESS BUILDING A ROOF PLAN

project	contract
148538	

drawing **500S103** – rev. **0**

sheet of sheets

file

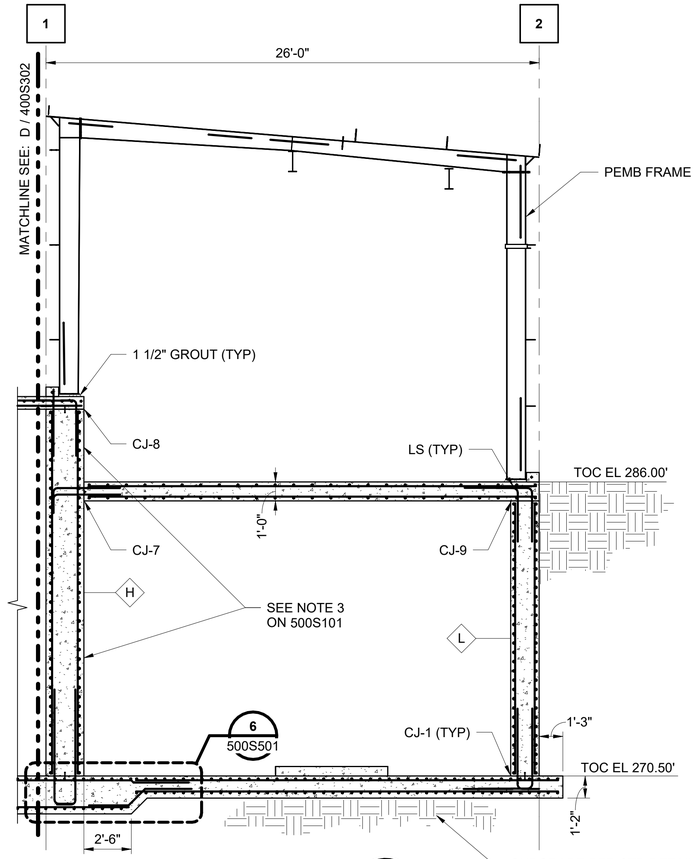

SECTION A 500S101

0 2' 4' 8'
SCALE IN FEET

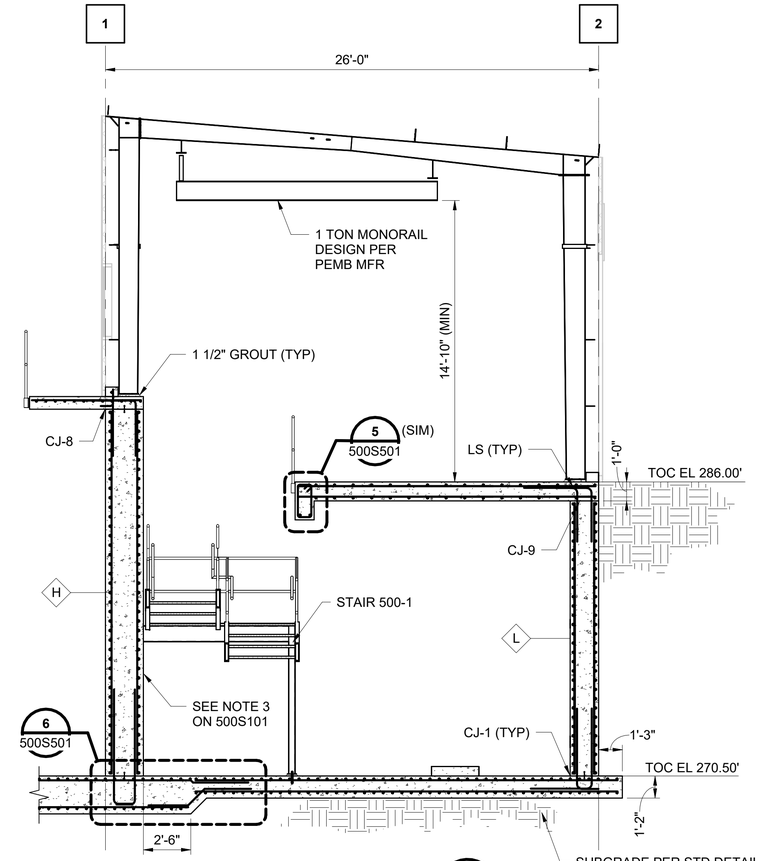

SECTION B 500S101

0 2' 4' 8'
SCALE IN FEET

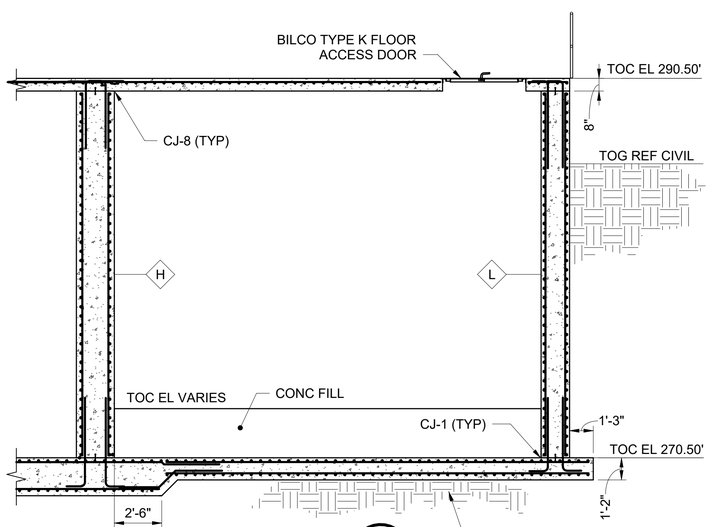

SECTION C 500S101

0 2' 4' 8'
SCALE IN FEET

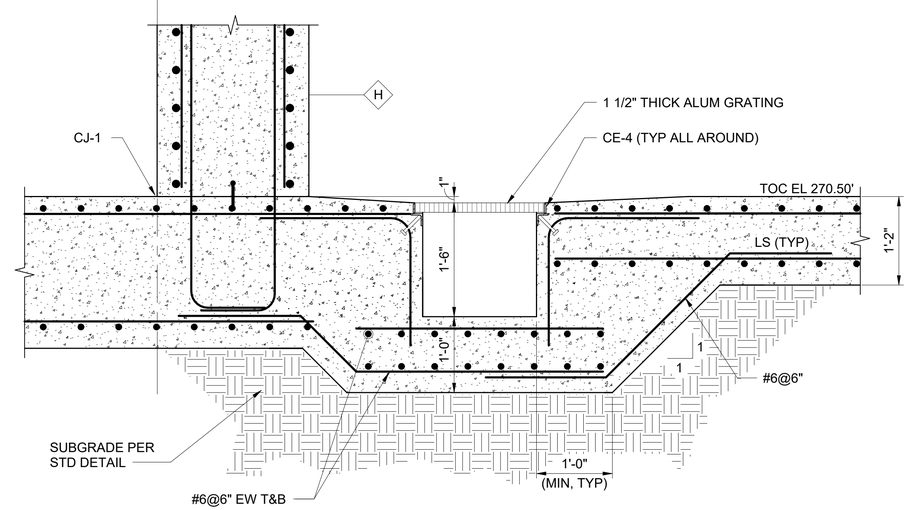

SECTION D 400S401

0 1/2' 1' 2'
SCALE IN FEET

GEORGIA REGISTERED No. SE001521 STRUCTURAL ENGINEER ALEX GRIFFIN

Alexander Griffin
Expires 2025.12.31
2024.06.26 11:42:13-05'00'

no.	date	by	ckd	description
0	06/26/24	SVW	AMG	ISSUED FOR CONSTRUCTION

BURNS McDONNELL
4004 SUMMIT BLVD. NE, SUITE 1200
ATLANTA, GA 30319
770-587-4776
LICENSEE NO. PEF000100
AUTHORIZATION NO. J550903

date	detailed
APRIL 10, 2023	S. WINGARD
designed	**checked**
S. WINGARD	J. KIENHOLZ

Perry

HOUSTON COUNTY, GEORGIA

EAST PERRY WWTF
PROCESS BUILDING A SECTIONS 1

project	contract
148538	

drawing 500S301 — **rev.** 0

sheet of **sheets**

file

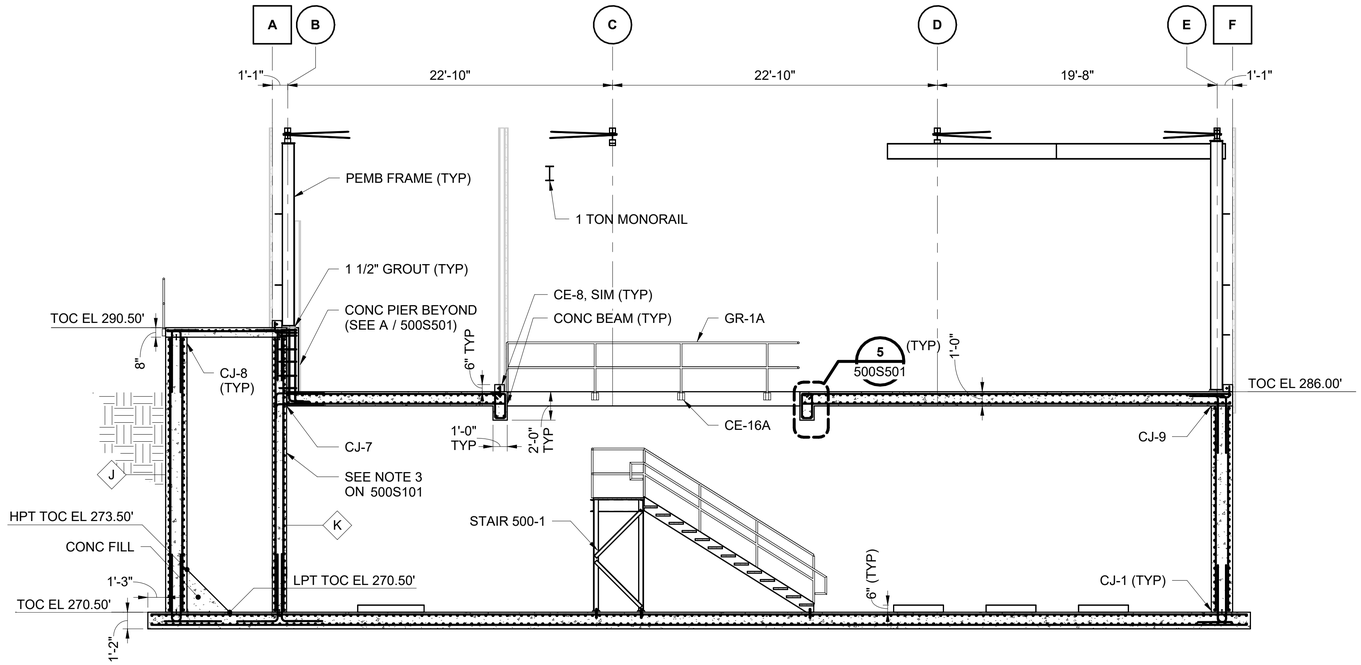

SECTION E 500S101

0 4' 8' 12'
SCALE IN FEET

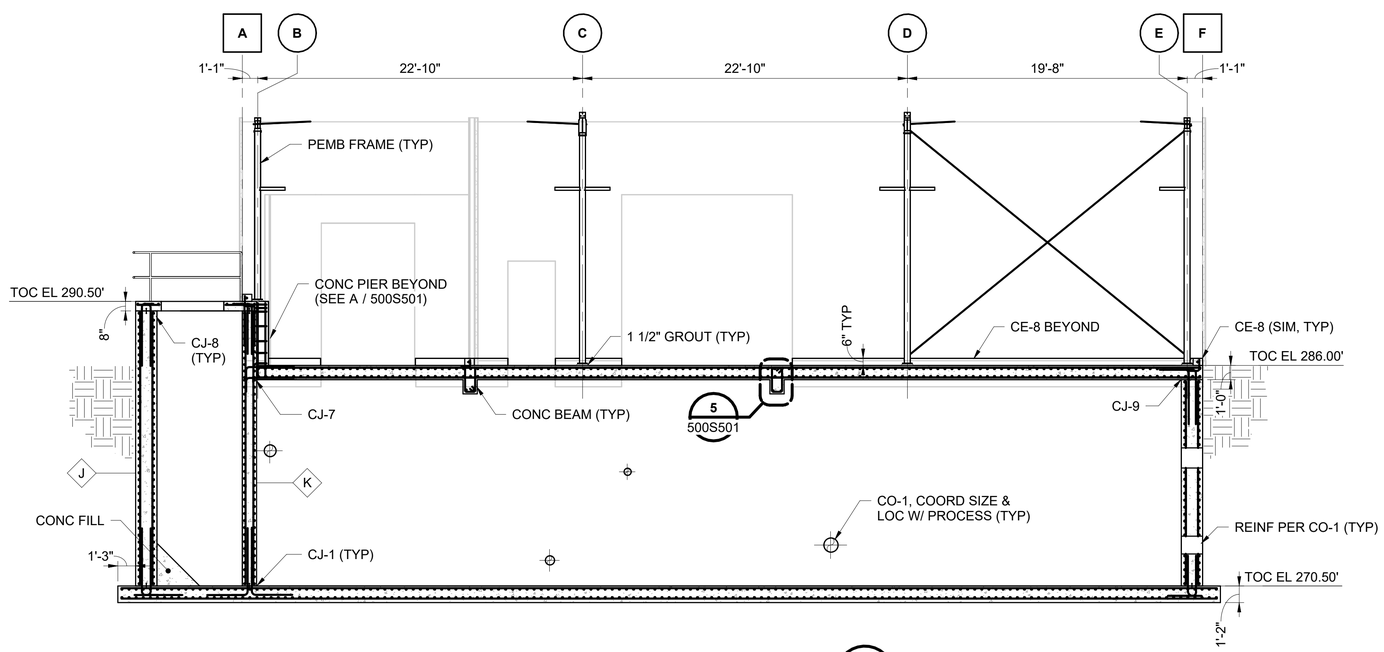

SECTION F 500S101

0 4' 8' 12'
SCALE IN FEET

no.	date	by	ckd	description
0	06/26/24	SVW	AMG	ISSUED FOR CONSTRUCTION

BURNS McDONNELL
4004 SUMMIT BLVD. NE, SUITE 1200
ATLANTA, GA 30319
770-587-4776
LICENSEE NO. PEF000100
AUTHORIZATION NO. J550903

date	detailed
NOVEMBER 3, 2023	S. WINGARD
designed	**checked**
S. WINGARD	J. KIENHOLZ

Perry
HOUSTON COUNTY, GEORGIA

EAST PERRY WWTF
PROCESS BUILDING A SECTIONS 2

GEORGIA REGISTERED No. SE001521 STRUCTURAL ENGINEER ALEX GRIFFIN

Alexander Griffin
Expires 2025.12.31
2024.06.26 11:42:30-05'00'

project	contract
148538	

drawing **500S302** — rev. **0**

sheet of sheets

file

Scale For Microfilming: Millimeters / Inches

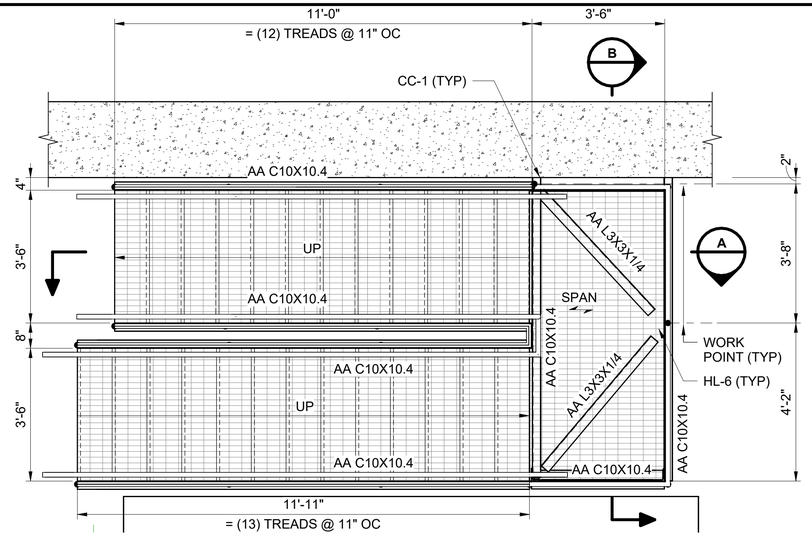

500-1 STAIR PLAN

0 1' 2' 4'
SCALE IN FEET

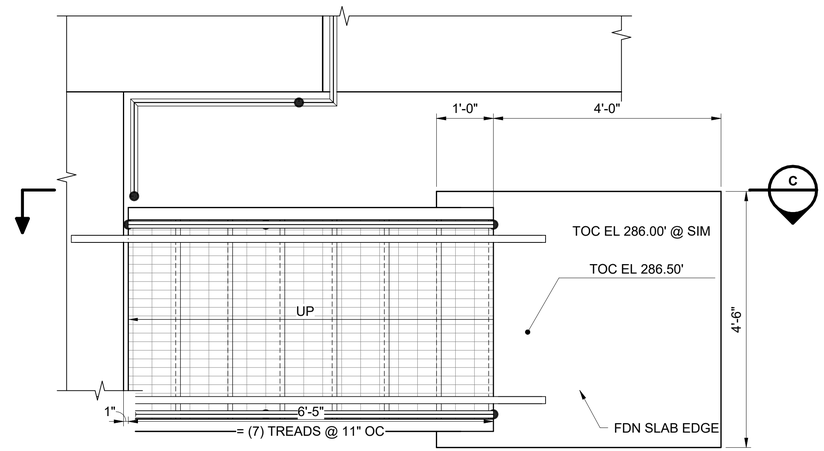

500-2 STAIR PLAN

0 1' 2' 3'
SCALE IN FEET

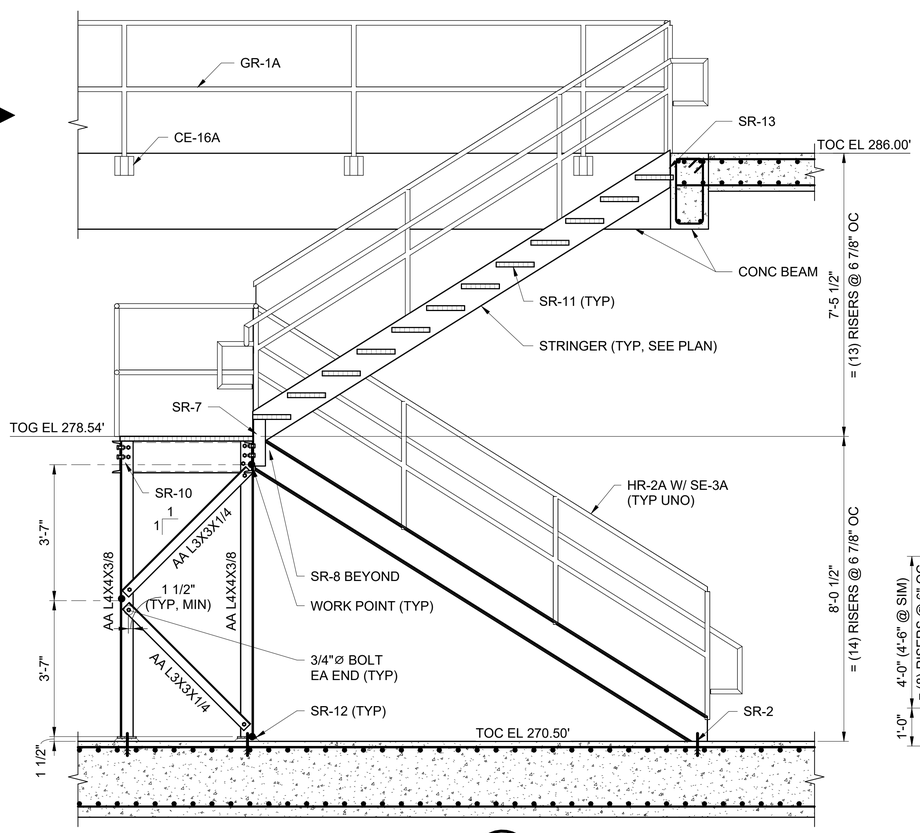

SECTION A

0 1' 2' 4'
SCALE IN FEET

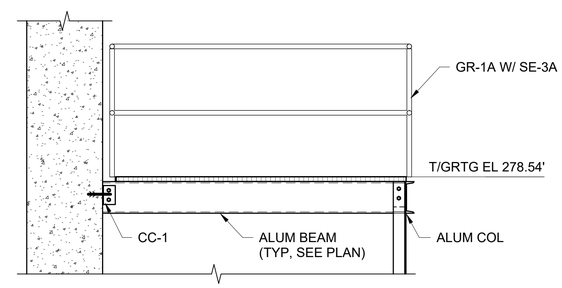

NOTE:
REINF NOT SHOWN FOR CLARITY

SECTION B

0 1' 2' 4'
SCALE IN FEET

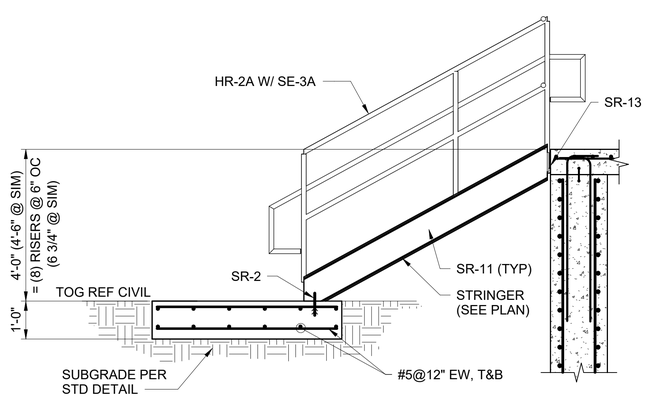

SECTION C

0 1' 2' 3'
SCALE IN FEET

NOTES:

1. SEE S000 SERIES FOR GENERAL NOTES, SPECIAL INSPECTION REQUIREMENTS AND STANDARD DETAILS.
2. ALL FRAMING ON THIS SHEET TO BE ALUMINUM. ALL BOLTS TO BE 316 SST.

no.	date	by	ckd	description
0	06/26/24	SVW	AMG	ISSUED FOR CONSTRUCTION

BURNS McDONNELL
4004 SUMMIT BLVD. NE, SUITE 1200
ATLANTA, GA 30319
770-587-4776
LICENSEE NO. PEF000100
AUTHORIZATION NO. J550903

date	detailed
FEBRUARY 2, 2024	S. WINGARD
designed	**checked**
S. WINGARD	J. KIENHOLZ

Perry
HOUSTON COUNTY, GEORGIA

GEORGIA REGISTERED No. SE001521 STRUCTURAL ENGINEER ALEX GRIFFIN

Alexander Griffin
Expires 2025.12.31
2024.06.26 11:42:54-05'00'

EAST PERRY WWTF
PROCESS BUILDING A STAIR PLAN AND DETAILS

project	contract
148538	

drawing **500S401** — rev. **0**

sheet of sheets

file

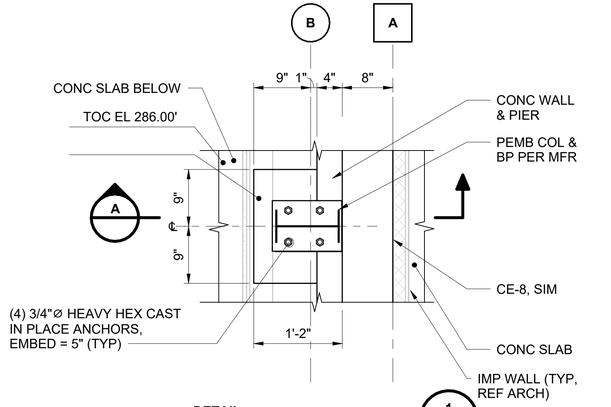

DETAIL 1 500S102

0 1/2' 1' 2'
SCALE IN FEET

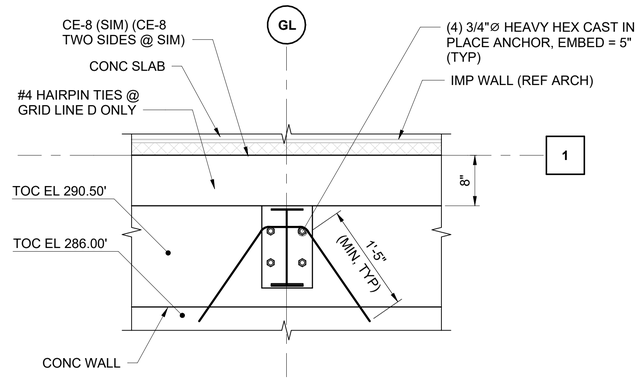

DETAIL 2 500S102

0 1/2' 1' 2'
SCALE IN FEET

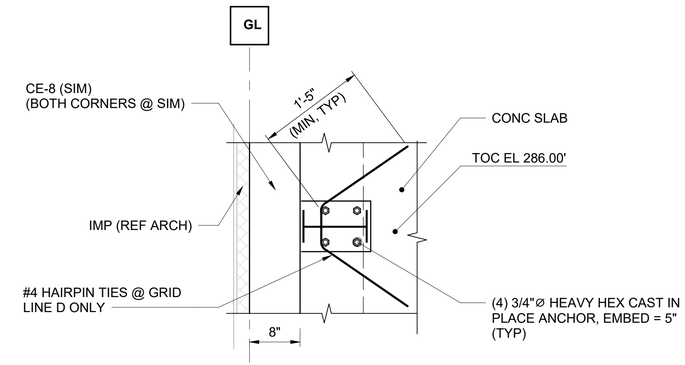

DETAIL 3 500S102

0 1/2' 1' 2'
SCALE IN FEET

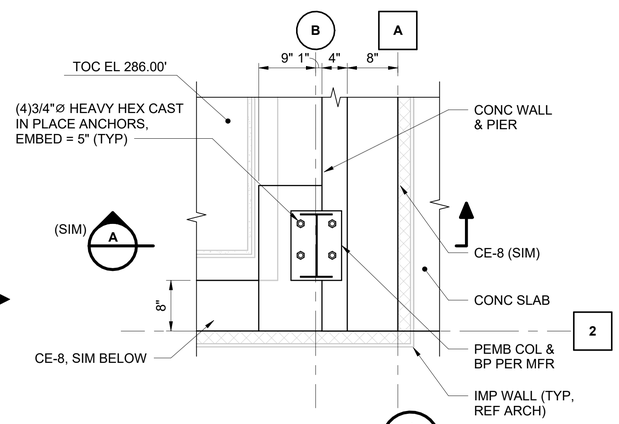

DETAIL 4 500S102

0 1/2' 1' 2'
SCALE IN FEET

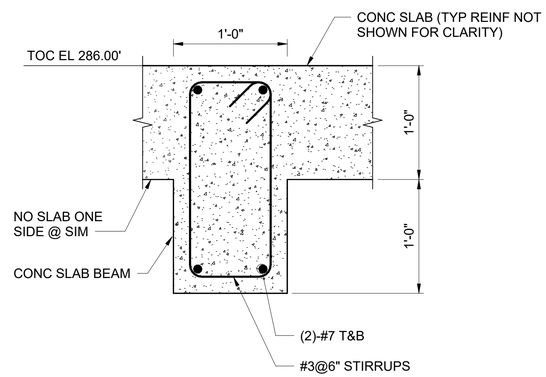

DETAIL 5 500S301

0 1/2' 1' 1 1/2'
SCALE IN FEET

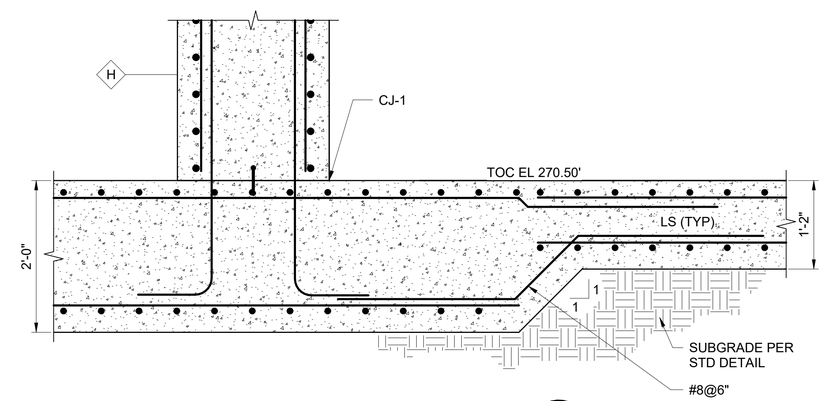

DETAIL 6 500S301

0 1/2' 1' 2'
SCALE IN FEET

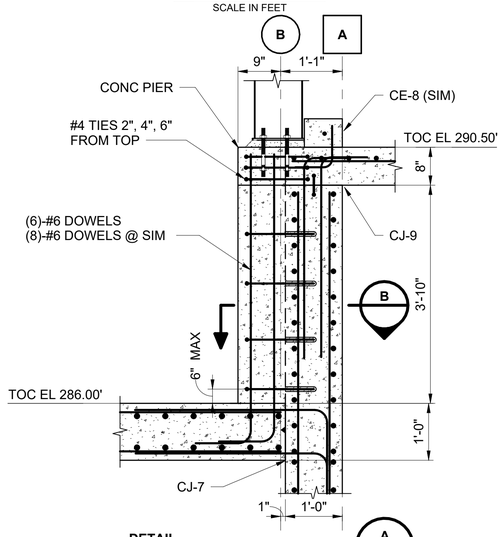

DETAIL A 500S501

0 1' 2' 3'
SCALE IN FEET

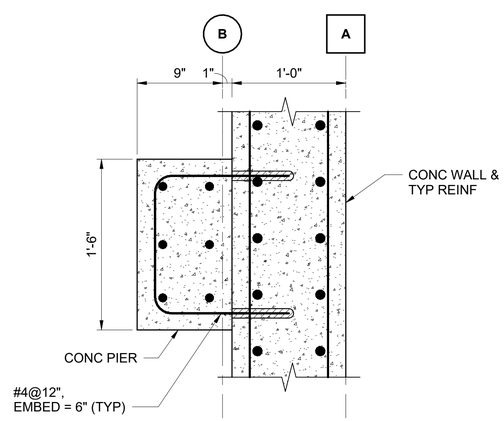

SECTION B 500S501

0 1/2' 1' 1 1/2'
SCALE IN FEET

no.	date	by	ckd	description
0	06/26/24	SVW	AMG	ISSUED FOR CONSTRUCTION

BURNS McDONNELL
4004 SUMMIT BLVD. NE, SUITE 1200
ATLANTA, GA 30319
770-587-4776
LICENSEE NO. PEF000100
AUTHORIZATION NO. J550903

date	detailed
FEBRUARY 2, 2024	S. WINGARD
designed	**checked**
S. WINGARD	J. KIENHOLZ

Perry
HOUSTON COUNTY, GEORGIA

EAST PERRY WWTF
PROCESS BUILDING A DETAILS

GEORGIA REGISTERED No. SE001521 STRUCTURAL ENGINEER ALEX GRIFFIN

Alexander Griffin
Expires 2025.12.31
2024.06.26 11:43:15-05'00'

project	contract
148538	

drawing **500S501** – rev. **0**

sheet of sheets

file

Millimeters
Scale For Microfilming
Inches

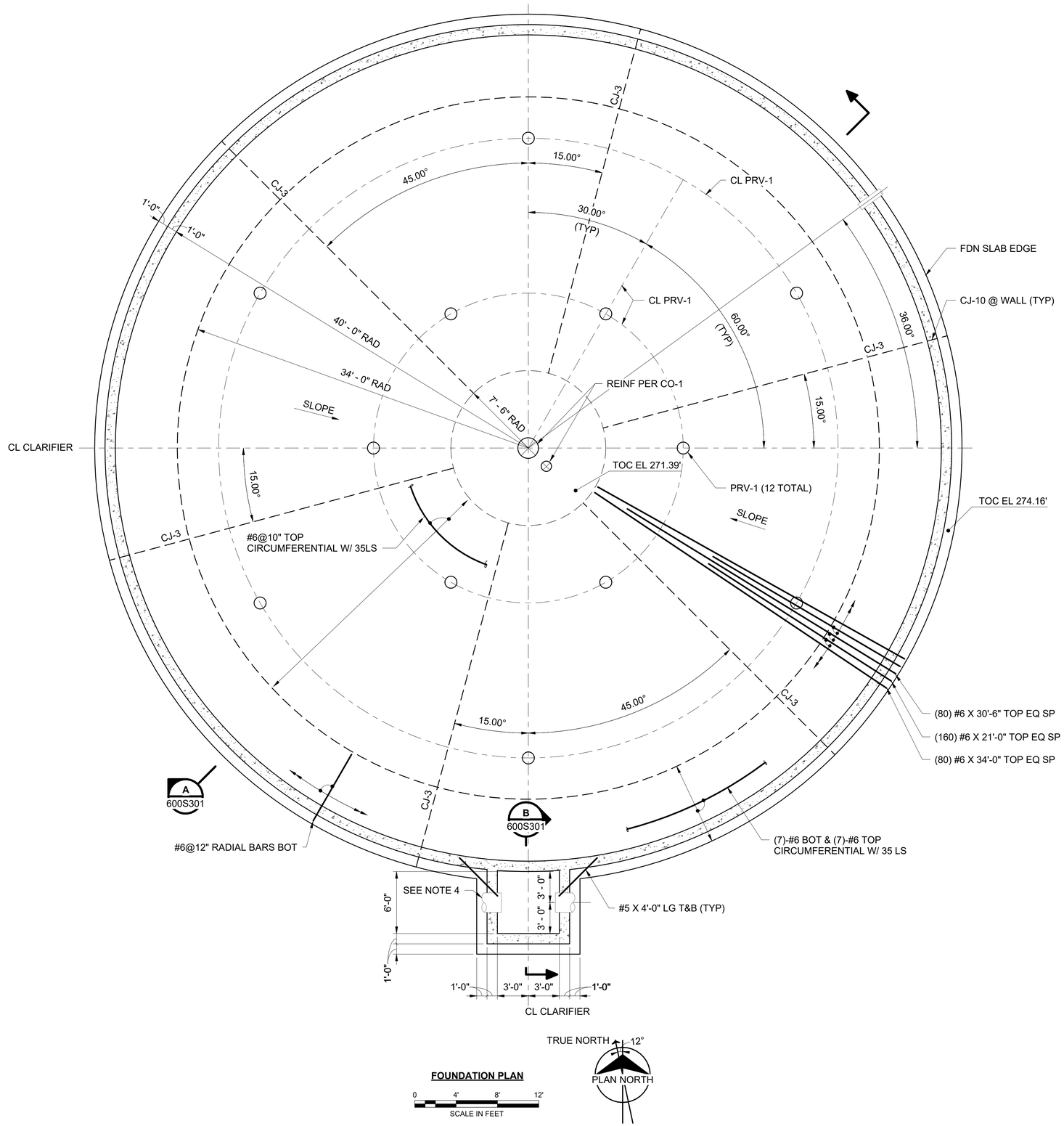

FOUNDATION PLAN

NOTES:

1. SEE S000 SERIES FOR GENERAL NOTES, SPECIAL INSPECTION REQUIREMENTS AND STANDARD DETAILS.
2. FOR CLARIFIERS (2 TOTAL) AND SPLITTER BOX LOCATION, REF CIVIL.
3. SEE REINF LAP SPLICE STAGGER DETAIL ON 100S501 FOR WALL REINFORCING LAYOUT.
4. PIPE PENETRATION AT LOCATION SHOWN ONLY OCCURS AT CLARIFIER A, COORDINATE WITH PROCESS.
5. DESIGN LOAD BEARING VALUE = 2000 PSF (NET)

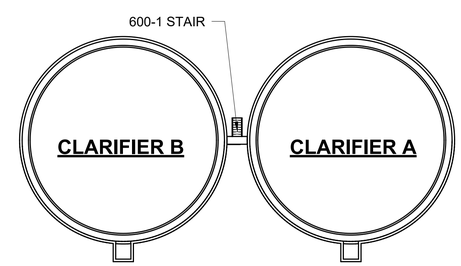

KEY PLAN
NOT TO SCALE

GEORGIA REGISTERED No. SE001521 STRUCTURAL ENGINEER ALEX GRIFFIN

Alexander Griffin
Expires 2025.12.31
2024.06.26 11:43:32-05'00'

no.	date	by	ckd	description
0	06/26/24	SVW	AMG	ISSUED FOR CONSTRUCTION

BURNS McDONNELL
4004 SUMMIT BLVD. NE, SUITE 1200
ATLANTA, GA 30319
770-587-4776
LICENSEE NO. PEF000100
AUTHORIZATION NO. J550903

date	detailed
NOVEMBER 4, 2023	N. KROUSS
designed	**checked**
S. WINGARD	J. KIENHOLZ

Perry
HOUSTON COUNTY, GEORGIA

EAST PERRY WWTF
CLARIFIERS FOUNDATION PLAN

project	contract
148538	

drawing 600S101 — **rev.** 0

sheet of **sheets**

file

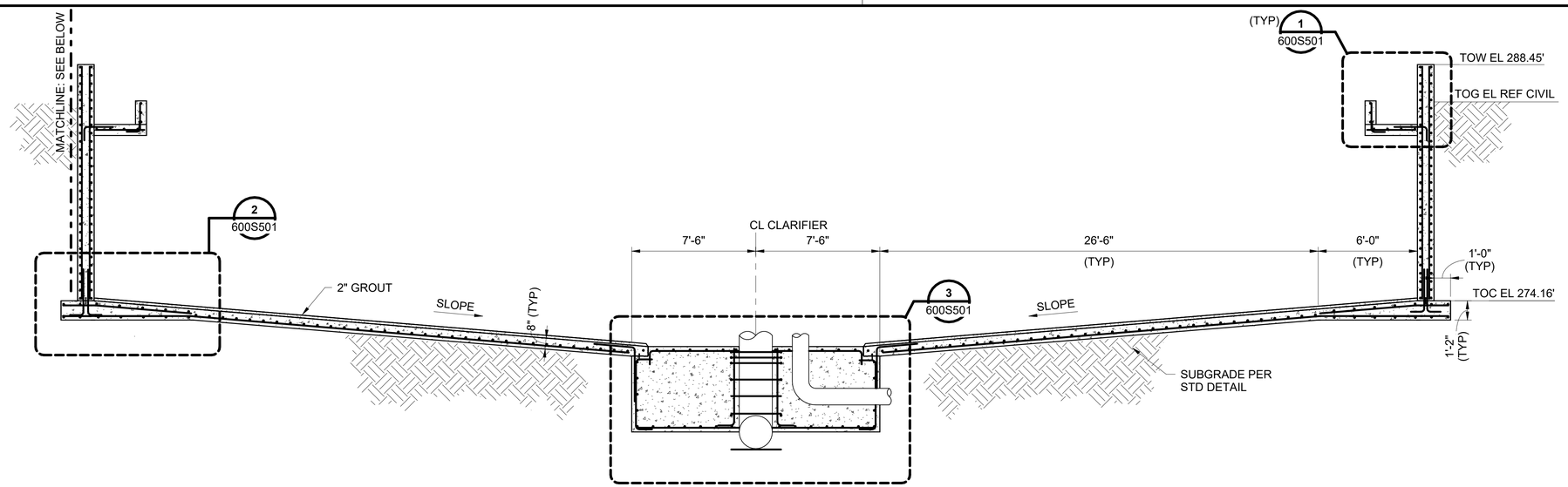

HOLD

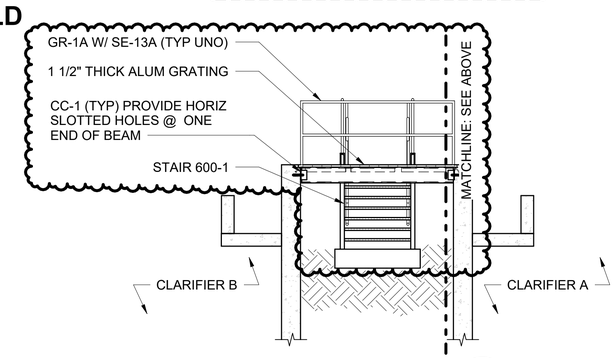

SECTION A 600S101

0 2' 4' 6'
SCALE IN FEET

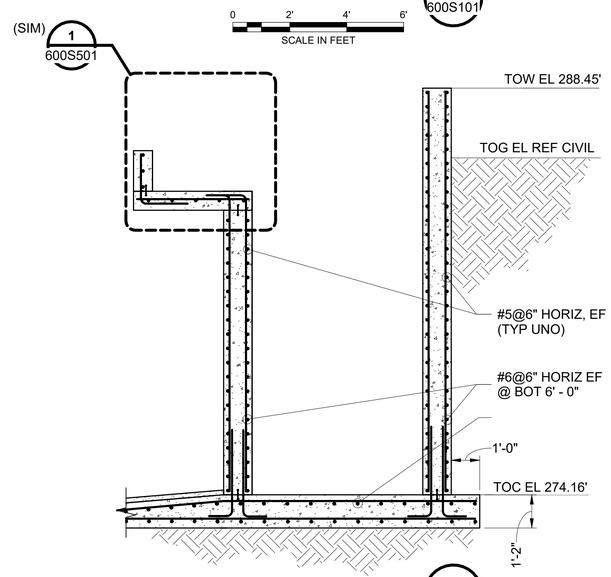

SECTION B 600S101

0 2' 4' 8'
SCALE IN FEET

no.	date	by	ckd	description
0	06/26/24	SVW	AMG	ISSUED FOR CONSTRUCTION

BURNS McDONNELL
4004 SUMMIT BLVD. NE, SUITE 1200
ATLANTA, GA 30319
770-587-4776
LICENSEE NO. PEF000100
AUTHORIZATION NO. J550903

date	detailed
NOVEMBER 4, 2023	N. KROUSS
designed	**checked**
S. WINGARD	J. KIENHOLZ

Perry

HOUSTON COUNTY, GEORGIA

EAST PERRY WWTF
CLARIFIERS SECTIONS

GEORGIA REGISTERED No. SE001521 STRUCTURAL ENGINEER ALEX GRIFFIN

Alexander Griffin
Expires 2025.12.31
2024.06.26 11:44:07-05'00'

project	contract
148538	

drawing **600S301** — rev. **0**

sheet of sheets

file

Millimeters
Scale For Microfilming
Inches

NOTES:

1. SEE S000 SERIES FOR GENERAL NOTES, SPECIAL INSPECTION REQUIREMENTS AND STANDARD DETAILS.
2. ALL FRAMING ON THIS SHEET TO BE GALVANIZED STEEL. ALL BOLTS TO BE 316 SST.

DESIGN LOADS:

1. SEE 100S0002 FOR STRUCTURAL DESIGN LOADING AND CRITERIA.
2. SUPERIMPOSED DEAD LOAD = 10 PSF

no.	date	by	ckd	description
0	06/26/24	SVW	AMG	ISSUED FOR CONSTRUCTION

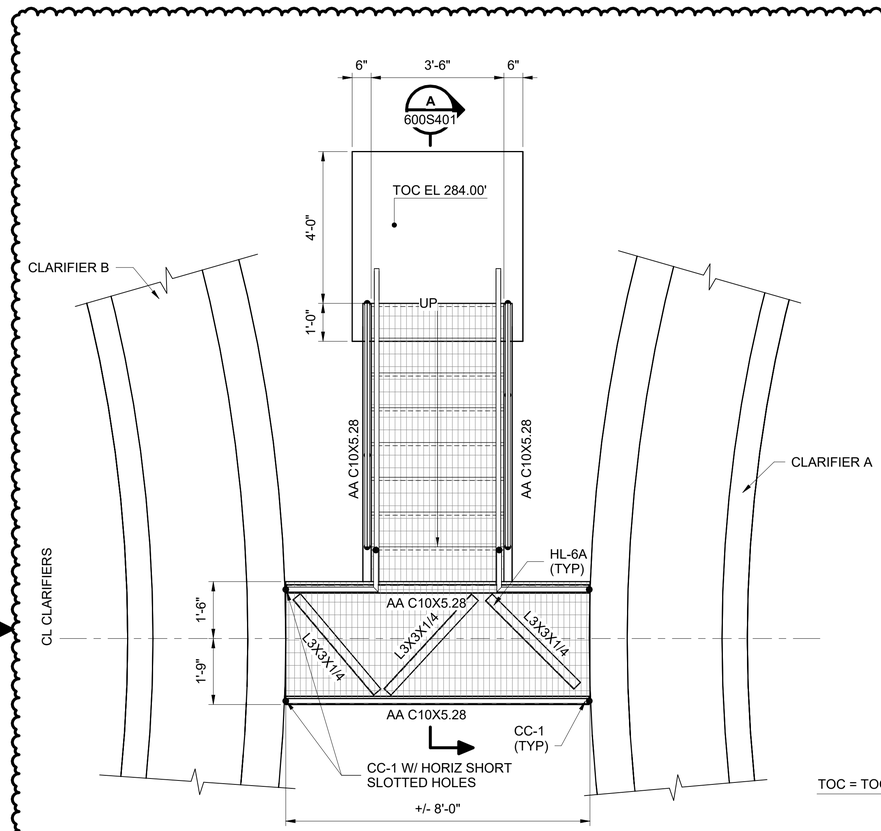

600-1 STAIR FRAMING PLAN

0 1/2' 1' 1 1/2'
SCALE IN FEET

HOLD

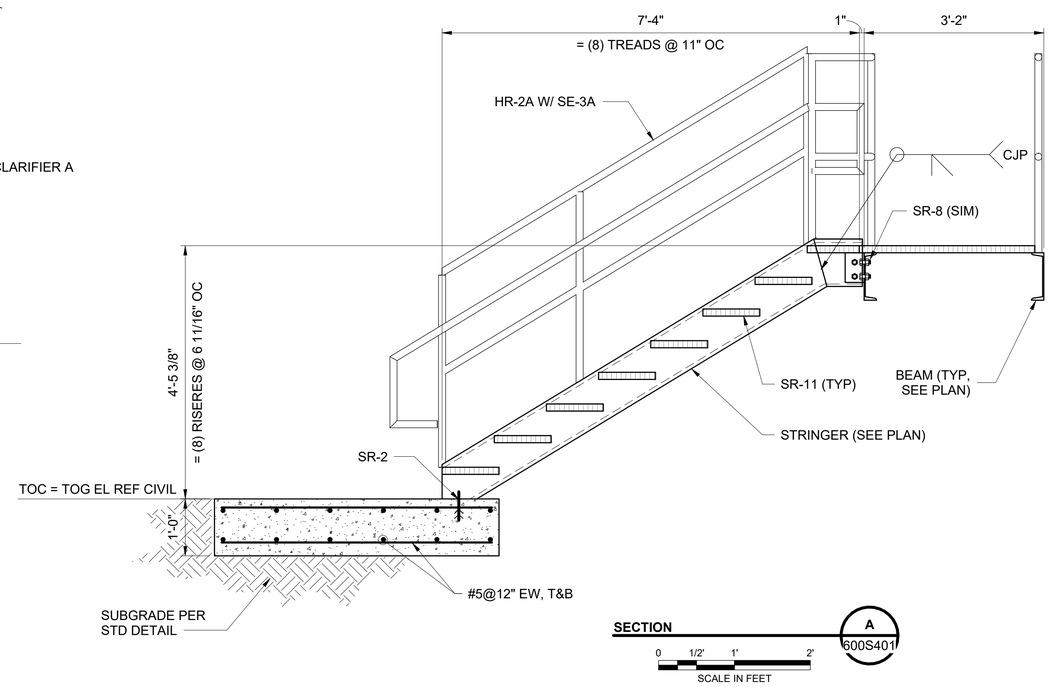

SECTION A 600S401

0 1/2' 1' 2'
SCALE IN FEET

GEORGIA REGISTERED No. SE001521 STRUCTURAL ENGINEER ALEX GRIFFIN

Alexander Griffin
Expires 2025.12.31
2024.06.26 11:45:03-05'00'

BURNS McDONNELL
4004 SUMMIT BLVD. NE, SUITE 1200
ATLANTA, GA 30319
770-587-4776
LICENSEE NO. PEF000100
AUTHORIZATION NO. J550903

date	detailed
NOVEMBER 14, 2023	S. WINGARD
designed	**checked**
S. WINGARD	J. KIENHOLZ

Perry

HOUSTON COUNTY, GEORGIA

EAST PERRY WWTF
CLARIFIERS STAIR PLAN AND DETAILS

project	contract
148538	

drawing **600S401** – rev. **0**

sheet of sheets

file

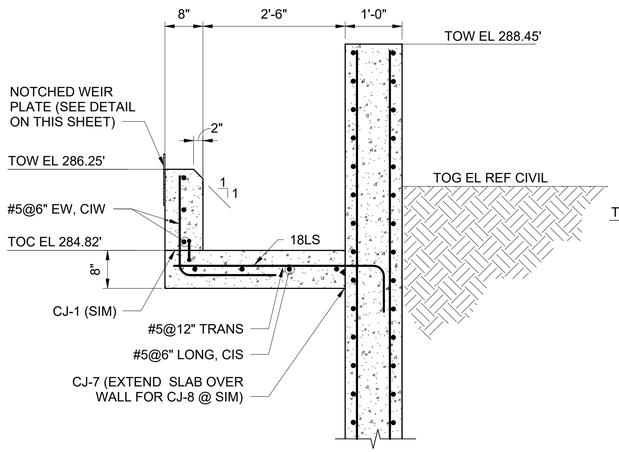

DETAIL 1 / 600S301

0 1' 2' 3'
SCALE IN FEET

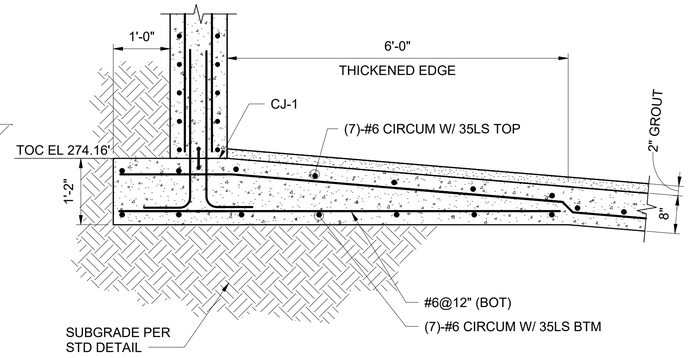

DETAIL 2 / 600S301

0 1' 2' 3'
SCALE IN FEET

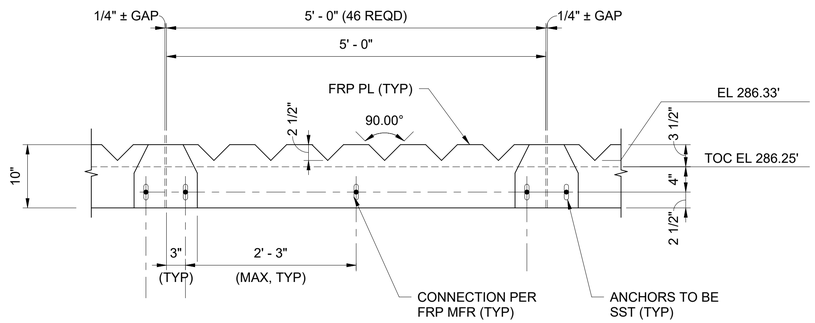

NOTES:

1. DIMENSIONS ARE BASED ON A RADIUS OF 36'-10" FOR THE EXTERIOR FACE OF THE WEIR PLATE. DETAIL SHOWN TO BE BASIS OF DESIGN FOR GENERAL ARRANGEMENT.
2. CONTRACTOR SHALL COORDINATE FRP SCUM BAFFLE WITH WEIR PLATE DETAILS AND SUBMIT SCUM BAFFLE DETAILS FOR ENGINEER'S APPROVAL. FINAL DESIGN OF WEIR PLATE BY MFR.

TYPICAL NOTCHED WEIR PLATE DETAIL
NOT TO SCALE

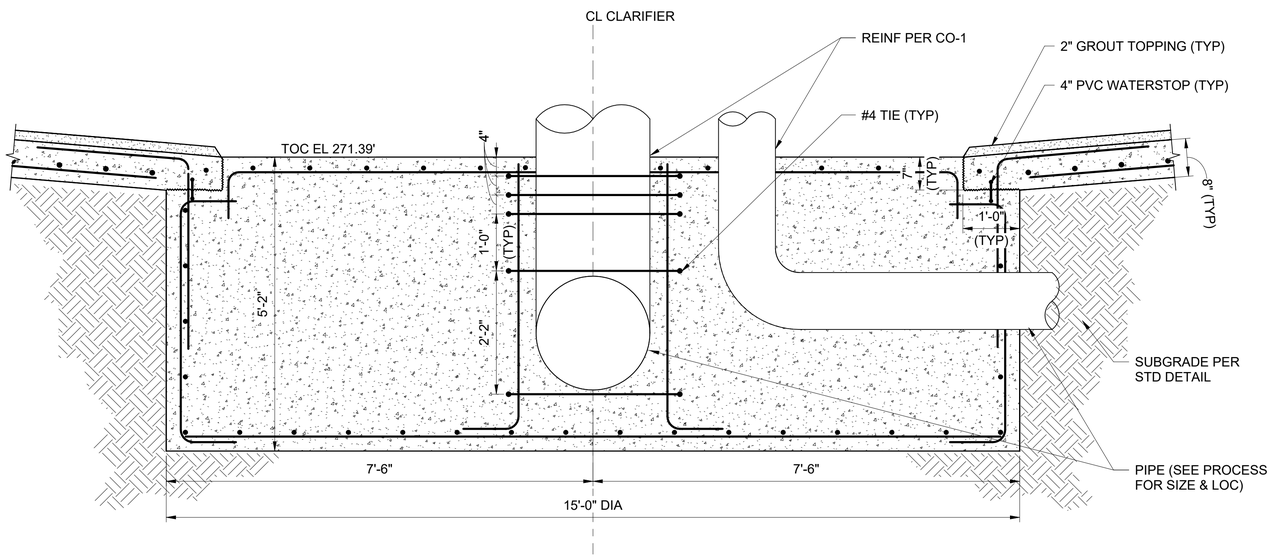

NOTE:

1. PIPE ORIENTATIONS SHOWN ARE REPRESENTATIVE ONLY AND VARY AT EACH CLARIFIER. CONTRACTOR TO VERIFY LOCATIONS WITH PROCESS DRAWINGS.

DETAIL 3 / 600S301
NOT TO SCALE

GEORGIA REGISTERED No. SE001521 STRUCTURAL ENGINEER ALEX GRIFFIN

Alexander Griffin
Expires 2025.12.31
2024.06.26 11:45:18-05'00'

no.	date	by	ckd	description
0	06/26/24	SVW	AMG	ISSUED FOR CONSTRUCTION

BURNS McDONNELL
4004 SUMMIT BLVD. NE, SUITE 1200
ATLANTA, GA 30319
770-587-4776
LICENSEE NO. PEF000100
AUTHORIZATION NO. J550903

date	detailed
NOVEMBER 14, 2023	S. WINGARD
designed	**checked**
S. WINGARD	J. KIENHOLZ

Perry
HOUSTON COUNTY, GEORGIA

EAST PERRY WWTF
CLARIFIERS DETAILS

project	contract
148538	

drawing **600S501** – rev. **0**

sheet of sheets
file

Scale For Microfilming: Millimeters / Inches

NOTES:

1. SEE S000 SERIES FOR GENERAL NOTES, SPECIAL INSPECTION REQUIREMENTS AND STANDARD DETAILS.
2. FOR CLARIFIERS (2 TOTAL) AND SPLITTER BOX LOCATION, REF CIVIL.
3. ALL FRAMING ON THIS SHEET TO BE ALUMINUM. ALL BOLTS TO BE 316 SST.
4. COORD GRATING OPENINGS W/ PROCESS EQUIPMENT.

DESIGN LOADS:

1. SEE 100S002 FOR STRUCTURAL DESIGN LOADS AND CRITERIA.
2. SUPERIMPOSED DEAD LOAD = 10 PSF
3. DEISGN LOAD BEARING VALUE = 2000 PSF (NET)

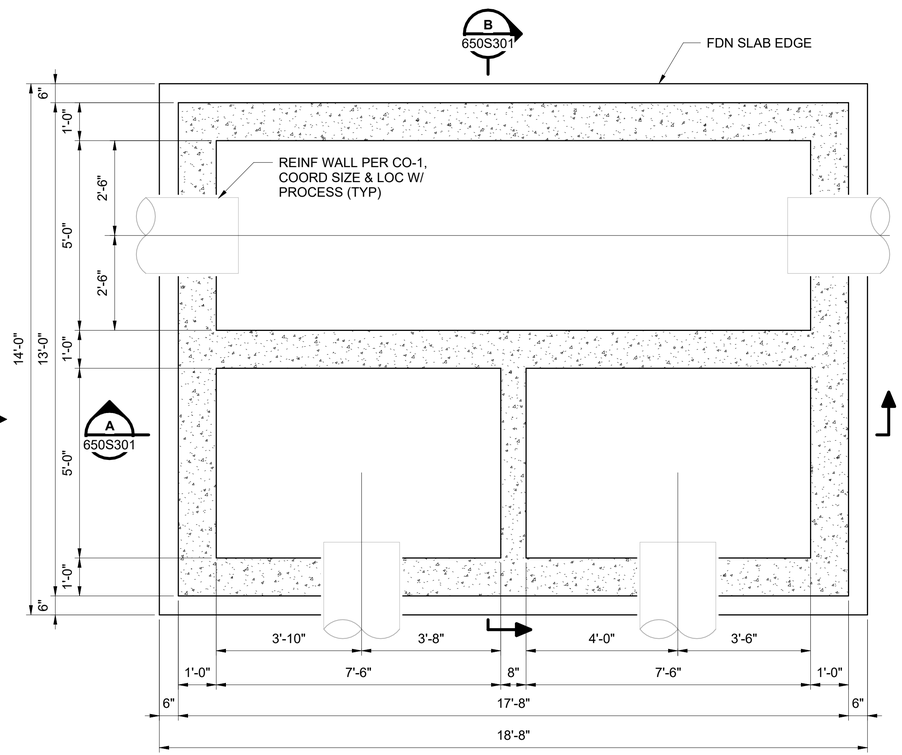

FOUNDATION PLAN

0 1' 2' 4'
SCALE IN FEET

NORTH

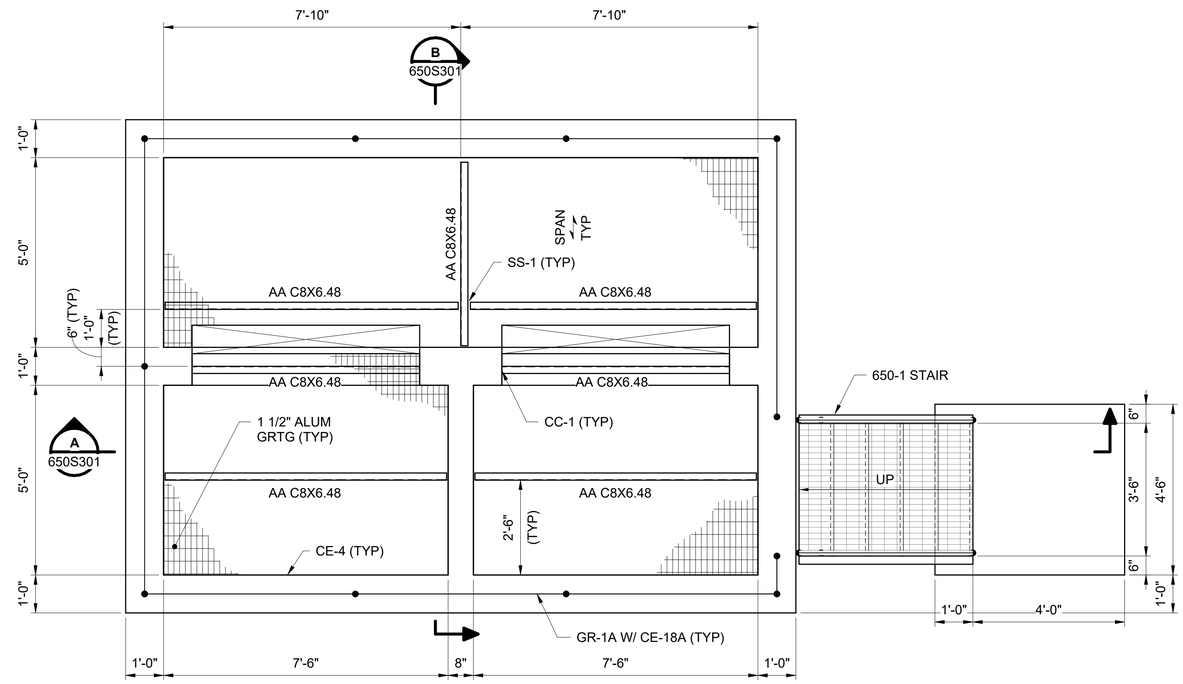

TOP PLAN

0 1' 2' 4'
SCALE IN FEET

NORTH

GEORGIA REGISTERED No. SE001521 STRUCTURAL ENGINEER ALEX GRIFFIN

Alexander Griffin
Expires 2025.12.31
2024.06.26 11:45:38-05'00'

no.	date	by	ckd	description
0	06/26/24	SVW	AMG	ISSUED FOR COSNTRUCTION

BURNS McDONNELL
4004 SUMMIT BLVD. NE, SUITE 1200
ATLANTA, GA 30319
770-587-4776
LICENSEE NO. PEF000100
AUTHORIZATION NO. J550903

date	detailed
APRIL 11, 2023	N. KROUSS
designed	**checked**
S. WINGARD	J. KIENHOLZ

Perry
HOUSTON COUNTY, GEORGIA

EAST PERRY WWTF
CLARIFIER SPLITTER PLAN VIEWS

project	contract
148538	

drawing **650S101** – rev. **0**

sheet of sheets

file

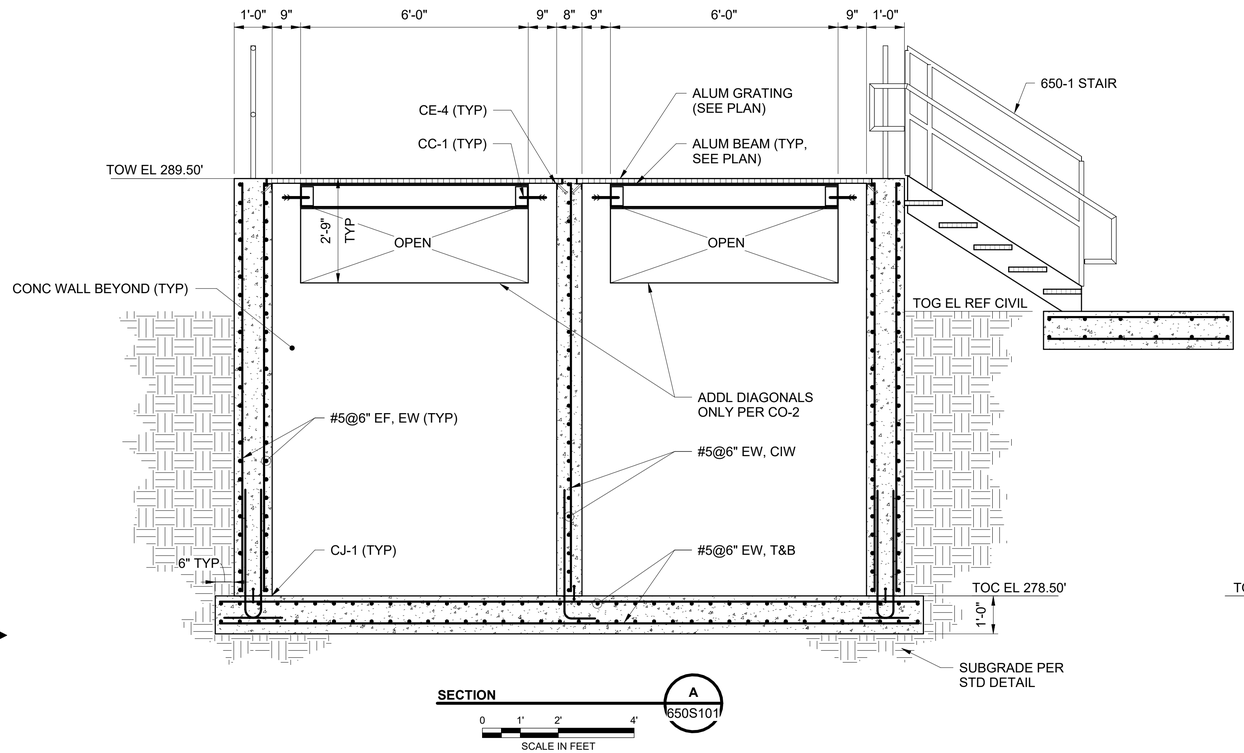

SECTION A 650S101

0 1' 2' 4'
SCALE IN FEET

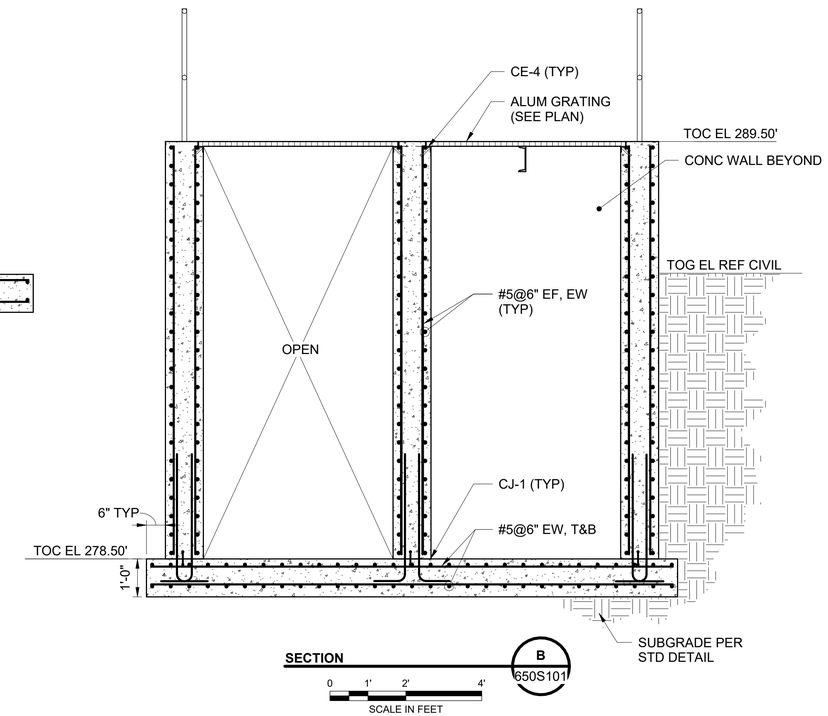

SECTION B 650S101

0 1' 2' 4'
SCALE IN FEET

no.	date	by	ckd	description
0	06/26/24	SVW	AMG	ISSUED FOR COSNTRUCTION

GEORGIA REGISTERED No. SE001521 STRUCTURAL ENGINEER ALEX GRIFFIN

Alexander Griffin
Expires 2025.12.31
2024.06.26 11:45:53-05'00'

BURNS McDONNELL
4004 SUMMIT BLVD. NE, SUITE 1200
ATLANTA, GA 30319
770-587-4776
LICENSEE NO. PEF000100
AUTHORIZATION NO. J550903

date	detailed
APRIL 11, 2023	N. KROUSS
designed	**checked**
S. WINGARD	J. KIENHOLZ

Perry
HOUSTON COUNTY, GEORGIA

EAST PERRY WWTF
CLARFIER SPLITTER SECTIONS

project	contract
148538	

drawing 650S301 – **rev.** 0

sheet of **sheets**

file

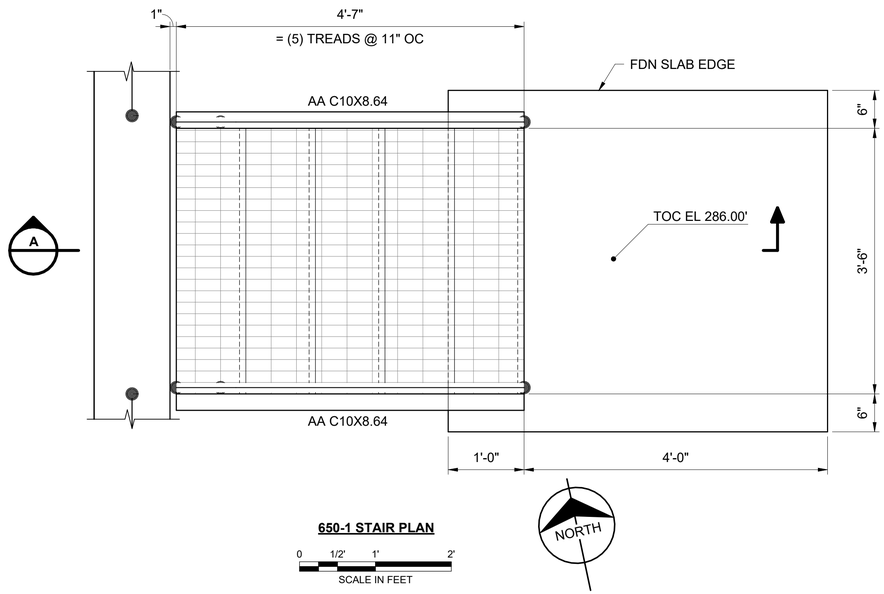

650-1 STAIR PLAN

0 1/2' 1' 2'
SCALE IN FEET

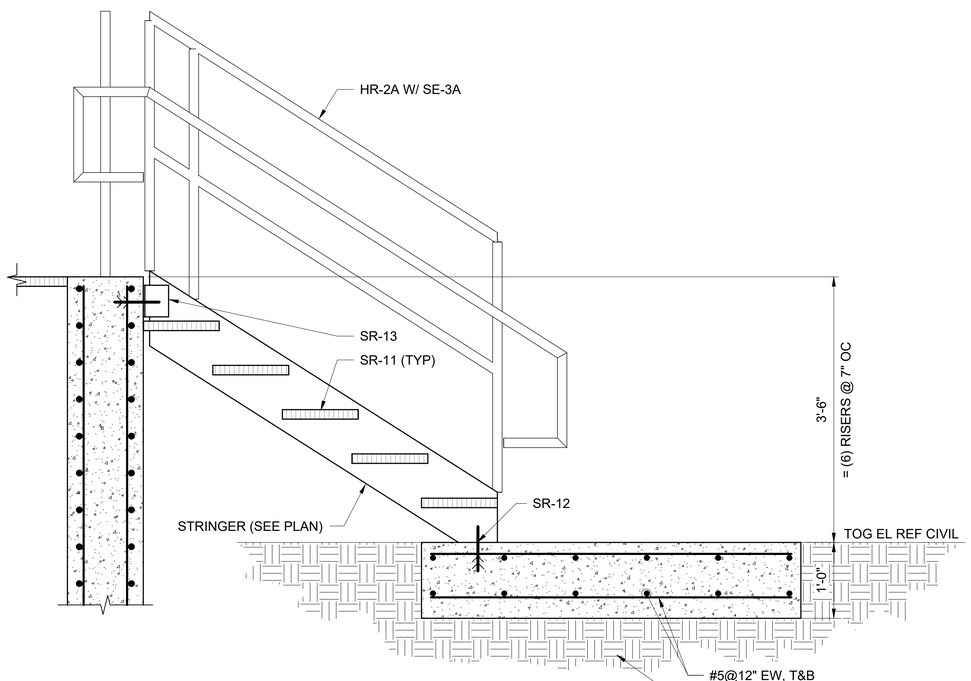

SECTION A

0 1/2' 1' 2'
SCALE IN FEET

NOTES:

1. SEE S000 SERIES FOR GENERAL NOTES, SPECIAL INSPECTION REQUIREMENTS AND STANDARD DETAILS.
2. ALL FRAMING ON THIS SHEET TO BE ALUMINUM. ALL BOLTS TO BE 316 SST.

no.	date	by	ckd	description
0	06/26/24	SVW	AMG	ISSUED FOR COSNTRUCTION

GEORGIA REGISTERED No. SE001521 STRUCTURAL ENGINEER ALEX GRIFFIN

Alexander Griffin
Expires 2025.12.31
2024.06.26 11:46:18-05'00'

BURNS McDONNELL
4004 SUMMIT BLVD. NE, SUITE 1200
ATLANTA, GA 30319
770-587-4776
LICENSEE NO. PEF000100
AUTHORIZATION NO. J550903

date	detailed
FEBRUARY 6, 2024	S. WINGARD
designed	**checked**
S. WINGARD	J. KIENHOLZ

Perry

HOUSTON COUNTY, GEORGIA

EAST PERRY WWTF
CLARIFIER SPLITTER STAIR PLAN AND DETAILS

project	contract
148538	

drawing **650S401** – rev. **0**

sheet of sheets

file

STRUCTURAL DESIGN LOADING/CRITERIA:

1. DEAD LOADS:
   A. SELF WEIGHT OF MATERIALS OF CONSTRUCTION
   B. WEIGHT OF FIXED SERVICE EQUIPMENT
      a. AS INDICATED ON THE STRUCTURAL DRAWINGS FOR EQUIPMENT WEIGHING IN EXCESS OF 300 LBS. FRAMING AND FOUNDATIONS ARE DESIGNED FOR EQUIPMENT WHICH SATISFIES THE CONTRACT SPECIFICATIONS.
      b. IF EQUIPMENT FURNISHED IS HEAVIER THAN THE WEIGHTS INDICATED, OR REQUIRES STRUCTURAL CHANGES FOR ANY OTHER REASON, PROVIDE ENGINEERING DESIGN CALCULATIONS AND ADDITIONAL STRUCTURAL WORK NECESSARY TO SUPPORT ALL LOADS IN ACCORDANCE WITH THE DESIGN STANDARDS SPECIFIED ABOVE, AT NO ADDITIONAL COST TO THE OWNER AND WITH NO INCREASE IN CONTRACT TIME.
   C. SUPERIMPOSED DEAD LOAD.....10 PSF
   D. EQUIPMENT LOAD.....SEE PROCESS AND ELECTRICAL
2. LIVE LOADS:
   A. STAIRS, WALKWAYS, PLATFORMS.....150 PSF, UNIFORM
      300 LB, CONCENTRATED
   B. PUMP AND ELECTRICAL ROOMS.....250 PSF
3. ROOF LIVE LOAD:.....20 PSF
4. WIND DESIGN DATA:
   A. INTERNAL PRESSURE COEFFICIENT..... OPEN STRUCTURE
   B. COMPONENTS AND CLADDING LOADS..... SEE DIAGRAM ON THIS SHEET
      a. COMPONENT AND CLADDING LOADS SHOWN ARE FOR BUILDING COMPONENTS OUTSIDE THE SCOPE OF THE PRE-ENGINEERED METAL BUILDING SYSTEM. PRE-ENGINEERED METAL BUILDING COMPONENT AND CLADDING LOADS FOR DESIGN OF THE BUILDING INCLUDING SECONDARY MEMBERS AND WALL AND ROOF COVERINGS.
5. SEISMIC DESIGN DATA:
   A. BASIC SEISMIC FORCE RESISTING SYSTEM: DELEGATED DESIGN BY THE PRE-ENGINEERED METAL BUILDING MANUFACTURER.
   B. SEE DRAWING 100S002 FOR SEISMIC ACCELERATIONS
6. GEOTECHNICAL DATA:
   A. DESIGN LOAD BEARING VALUE..... 2000 PSF (NET)

PRE-ENGINEERED METAL BUILDING SYSTEMS:

1. THE UV CANOPY BUILDING IS A DELEGATED DESIGN, PREFABRICATED METAL BUILDING SYSTEM. REFER TO PROJECT SPECIFICATIONS.
2. DESIGN, FABRICATE, AND ERECT METAL BUILDINGS SYSTEMS IN ACCORDANCE WITH MBMA METAL BUILDING SYSTEMS MANUAL AS MODIFIED BY CONTRACT DOCUMENTS.
3. SUBMIT SHOP DRAWINGS AND STRUCTURAL DESIGN ANALYSIS OF METAL BUILDINGS SYSTEM PREPARED AND SEALED BY QUALIFIED PROFESSIONAL ENGINEER.
   A. INCLUDE DEVELOPMENT OF LOADS, DESCRIPTION OF INDIVIDUAL AND COMBINED LOAD CASES, DESCRIPTION OF MATERIALS, COMPARISON OF PERMITTED STRESSES VERSUS COMPUTED STRESSES, CALCULATION OF DEFLECTIONS, AND ANCHOR ROD LAYOUT.
   B. DESIGN ANCHORAGE CONNECTIONS OF THE METAL BUILDING SYSTEM TO TRANSMIT ONLY VERTICAL AND HORIZONTAL FORCES (NO MOMENTS) TO THE FOUNDATIONS. SUBMIT SERVICE-LEVEL REACTIONS AT EACH ANCHORAGE CONNECTION IN ALL THREE PRINCIPAL DIRECTIONS FOR EACH INDIVIDUAL (NOT COMBINED) LOAD CASE, SUCH AS DEAD, COLLATERAL, FLOOR LIVE, ROOF LIVE, WIND, EARTHQUAKE, ETC.
   C. THE FOUNDATION AND ANCHOR BOLT LAYOUT SHOWN ON THESE DRAWINGS IS BASED ON THE COLUMN REACTIONS SHOWN AND ON INFORMATION PROVIDED BY VARCO PRUDEN BUILDINGS.
   D. DO NOT CONSTRUCT FOUNDATIONS OR FABRICATE FOUNDATION REINFORCING STEEL UNTIL METAL BUILDING SYSTEM SHOP DRAWINGS AND DESIGN ANALYSIS ARE APPROVED. WHERE SUBMITTED REACTIONS EXCEED ASSUMED REACTIONS AS INDICATED IN NOTE 7, FOUNDATIONS ARE SUBJECT TO CHANGE. CONTACT ENGINEER.
4. PROVIDE ANCHOR RODS OF SIZE, QUANTITY, AND LAYOUT REQURED BY METAL BUILDING MANUFACTURER. OBTAIN PRIOR APPROVAL OF ENGINEER IF THESE ADJUSTMENTS REQUIRED CHANGING ANY STRUCTURAL OR ARCHITECTURAL DIMENSIONS OR DETAILS.
5. PROVIDE PRETENSIONED BOLTS FOR PRIMARY FRAME CONNECTIONS.
6. PROVIDE ADDITIONAL FRAMING AROUND WALL AND ROOF OPENINGS, AND WHERE REQUIRED TO SUPPORT AND BRACE SUSPENDED ITEMS SUCH AS DUCTWORK, PIPING, LIGHTING, EQUIPMENT, ETC.
7. BUILDING COLUMN REACTIONS (ALLOWABLE):
   END FRAMES:
      MAX VERTICAL: 4.5 KIPS
      MIN VERTICAL: -1.3 KIPS
      MAX HORIZONTAL: 1.1 KIPS
   INTERIOR FRAMES:
      MAX VERTICAL: 7.7 KIPS
      MIN VERTICAL: -1.2 KIPS
      MAX HORIZONTAL: 1.7 KIPS
   WIND COLUMNS:
      MAX VERTICAL: 7.7 KIPS
      MIN VERTICAL: -1.3 KIPS
      MAX HORIZONTAL: 1.7 KIPS

COMPONENTS & CLADDING SCHEDULE (PSF)

PER ASCE 7-16 FIGURE 30.7-1

EFFECTIVE AREA	ZONE 1		ZONE 2		ZONE 3	
A ≤ 9 ft2	70.56	-110.65	52.92	-56.13	35.28	-36.88
9 ft2 ≤ A ≤ 36 ft2	52.92	-56.13	52.92	-56.13	35.28	-36.88
A ≥ 36 ft2	35.28	-36.88	35.28	-36.88	35.28	-36.88

NOTES:
1. POSITIVE PRESSURES ACTING TOWARDS SURFACE, NEGATIVE PRESSURES ACTING AWAY FROM SURFACE.
2. INTERPOLATION CAN BE USED FOR EFFECTIVE AREAS THAT ARE BETWEEN THOSE VALUES SHOWN.
3. VALUES LISTED ARE ULTIMATE VALUES. REDUCE TO ALLOWABLE LOADS WITH A FACTOR 0.6.
4. EACH COMPONENT MUST BE DESIGNED FOR MAXIMUM POSITIVE AND NEGATIVE PRESSURES.

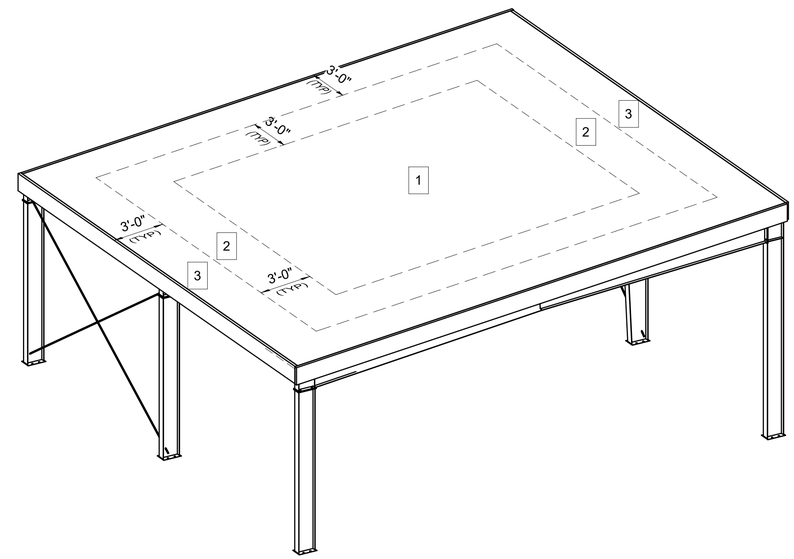

C&C DIAGRAM
NOT TO SCALE

Alexander Griffin
Expires 2025.12.31
2024.06.26 11:46:36-05'00'

no.	date	by	ckd	description
0	06/26/24	SVW	AMG	ISSUED FOR CONSTRUCTION

BURNS McDONNELL
4004 SUMMIT BLVD. NE, SUITE 1200
ATLANTA, GA 30319
770-587-4776
LICENSEE NO. PEF000100
AUTHORIZATION NO. J550903

date	detailed
JANUARY 8, 2024	S. WINGARD
designed	**checked**
S. WINGARD	J. KIENHOLZ

Perry
HOUSTON COUNTY, GEORGIA

EAST PERRY WWTF
UV TREATMENT LOAD MAPS

project: 148538
contract:
drawing: 750S100 — rev. 0
sheet of sheets
file

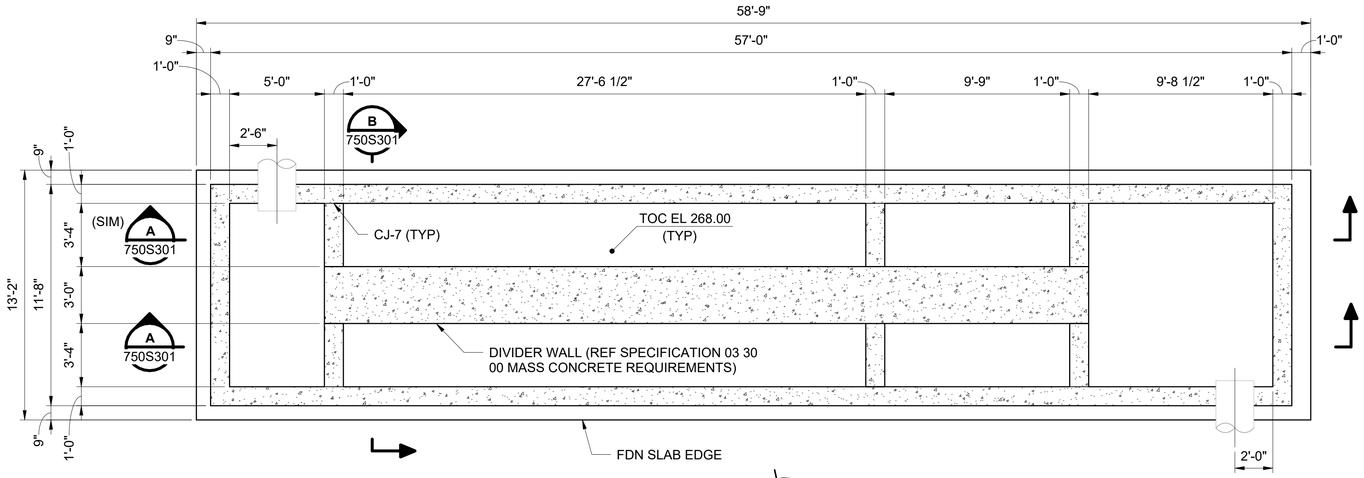

FOUNDATION PLAN

0 2' 4' 8'
SCALE IN FEET

NORTH

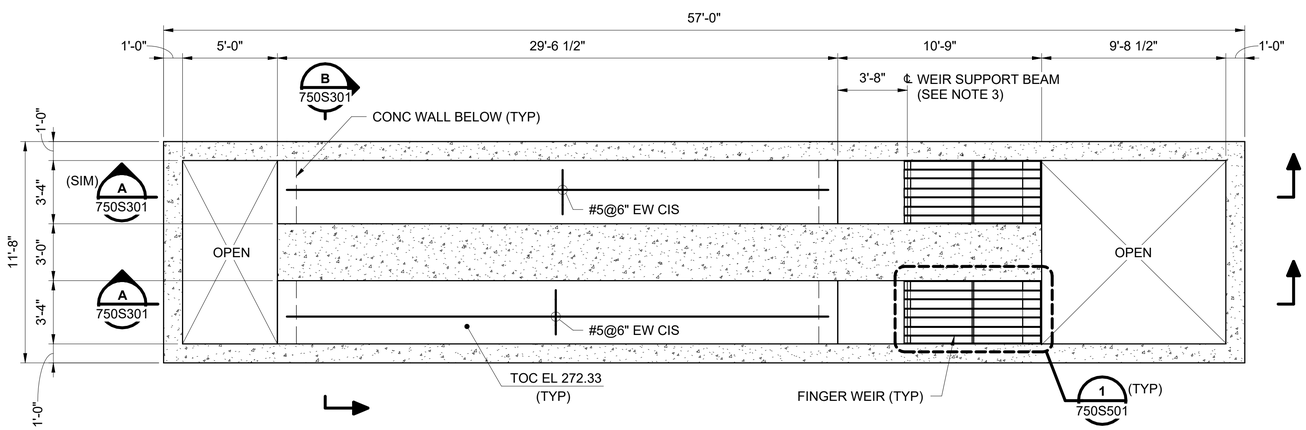

SLAB PLAN

0 2' 4' 8'
SCALE IN FEET

NORTH

NOTES:

1. SEE S000 SERIES FOR GENERAL NOTES, SPECIAL INSPECTION REQUIREMENTS AND STANDARD DETAILS.
2. CHANNEL SLABS SHALL ACHIEVE DESIGN STRENGTH AS DEMONSTRATED BY CYLINDER TESTING PRIOR TO LEAKTEST AND BACKFILL.
3. CONTRACTOR SHALL COORDINATE BEAM LOCAATION WITH WEIR MANUFACTURER.

no.	date	by	ckd	description
0	06/26/24	SVW	AMG	ISSUED FOR CONSTRUCTION

GEORGIA REGISTERED No. SE001521 STRUCTURAL ENGINEER ALEX GRIFFIN

Alexander Griffin
Expires 2025.12.31
2024.06.26 11:46:52-05'00'

BURNS McDONNELL
4004 SUMMIT BLVD. NE, SUITE 1200
ATLANTA, GA 30319
770-587-4776
LICENSEE NO. PEF000100
AUTHORIZATION NO. J550903

date	detailed
NOVEMBER 11, 2023	S. WINGARD
designed	**checked**
S. WINGARD	J. KIENHOLZ

Perry
HOUSTON COUNTY, GEORGIA

EAST PERRY WWTF
UV TREATMENT PLAN VIEWS

project	contract
148538	

drawing **750S101** — rev. **0**

sheet of sheets

file

Scale For Microfilming
Millimeters
Inches

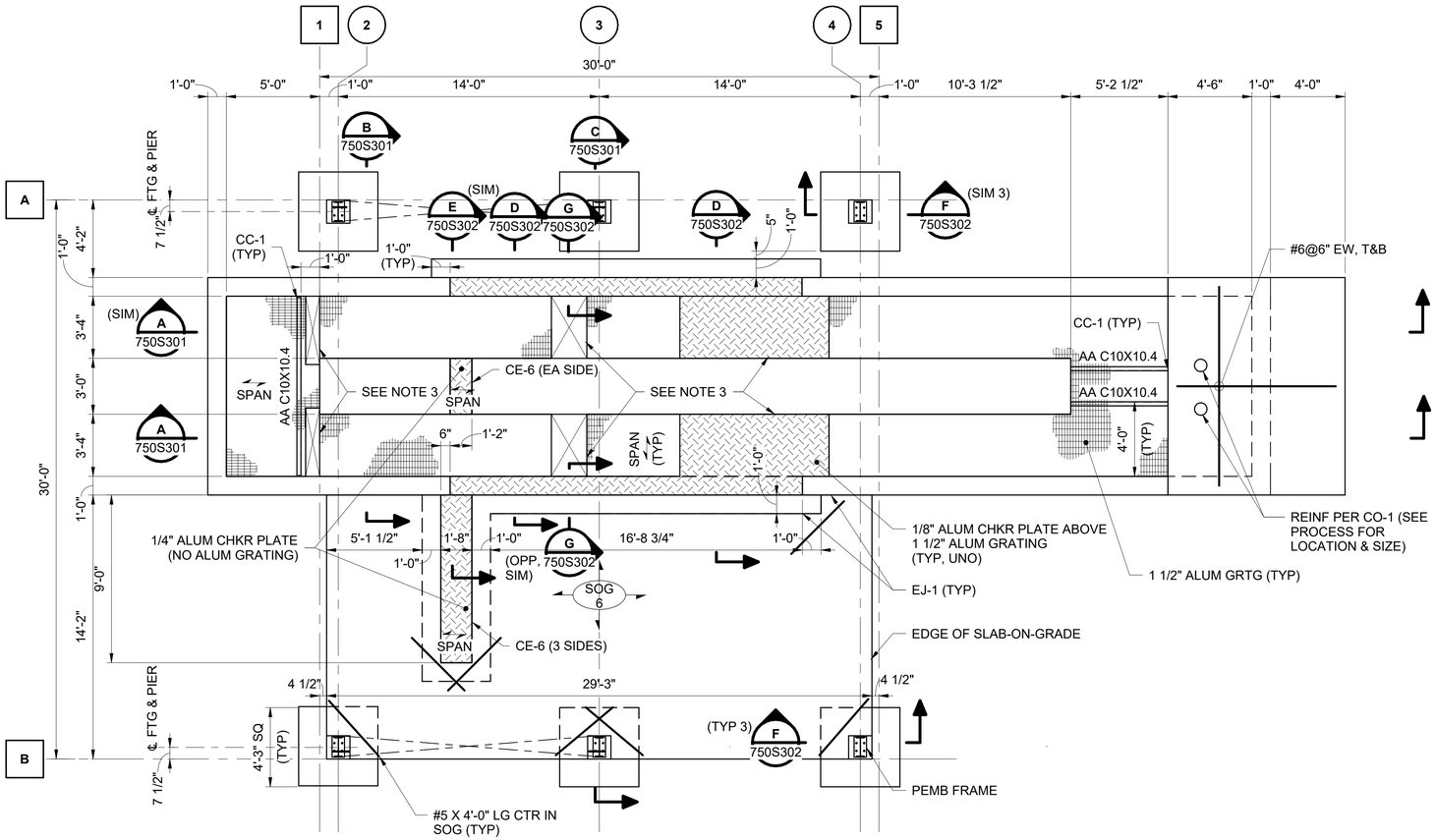

TOP PLAN

0 2' 4' 8'
SCALE IN FEET

NOTES:

1. SEE S000 SERIES FOR GENERAL NOTES, SPECIAL INSPECTION REQUIREMENTS AND STANDARD DETAILS
2. ALL FRAMING THAT IS NOT THE PEMB TO BE ALUMINUM. ALL BOLTS TO BE 316 SST.
3. COORD GRATING OPENINGS AND LOCATION OF CHECKERED PLATE WITH PROCESS EQUIPMENT.

SOG 6 — DENOTES 6" SLAB ON GRADE REINF W/ #5@12" OC, MID-SLAB.

DENOTES PROPOSED BRACED FRAME BAY.

no.	date	by	ckd	description
0	06/26/24	SVW	AMG	ISSUED FOR CONSTRUCTION

GEORGIA REGISTERED No. SE001521 STRUCTURAL ENGINEER ALEX GRIFFIN

Alexander Griffin
Expires 2025.12.31
2024.06.26 11:47:07-05'00'

BURNS McDONNELL
4004 SUMMIT BLVD. NE, SUITE 1200
ATLANTA, GA 30319
770-587-4776
LICENSEE NO. PEF000100
AUTHORIZATION NO. J550903

date	detailed
NOVEMBER 12, 2023	S. WINGARD
designed	**checked**
S. WINGARD	J. KIENHOLZ

Perry
HOUSTON COUNTY, GEORGIA

EAST PERRY WWTF
UV TREATMENT TOP PLAN

project	contract
148538	

drawing **750S102** — rev. **0**

sheet of sheets

file

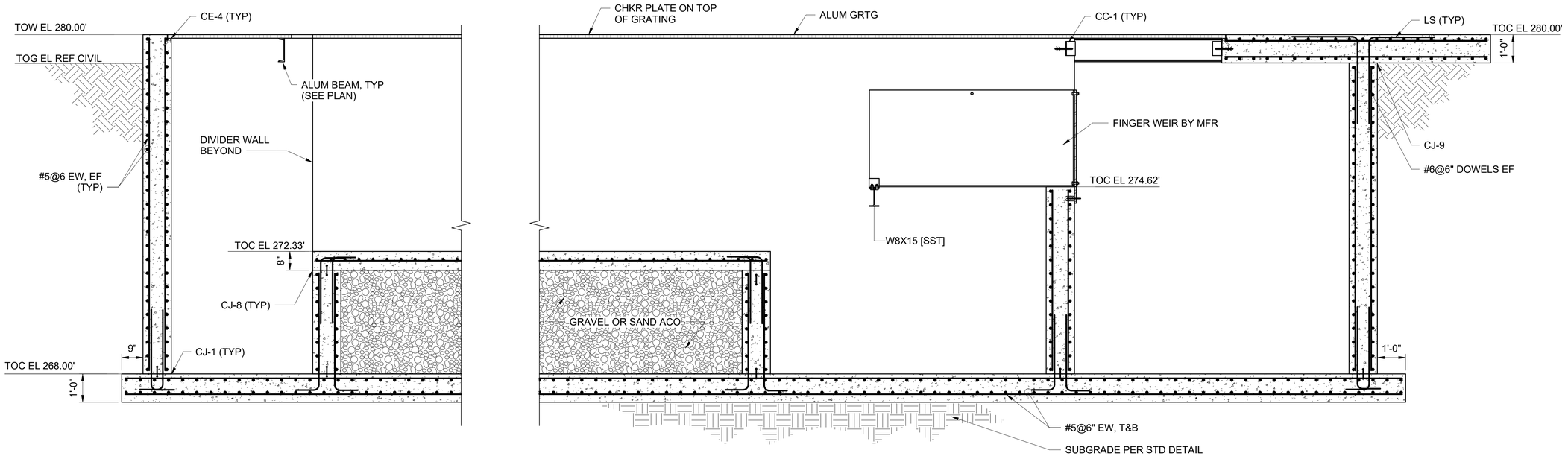

SECTION A 750S101

0 1' 2' 4'
SCALE IN FEET

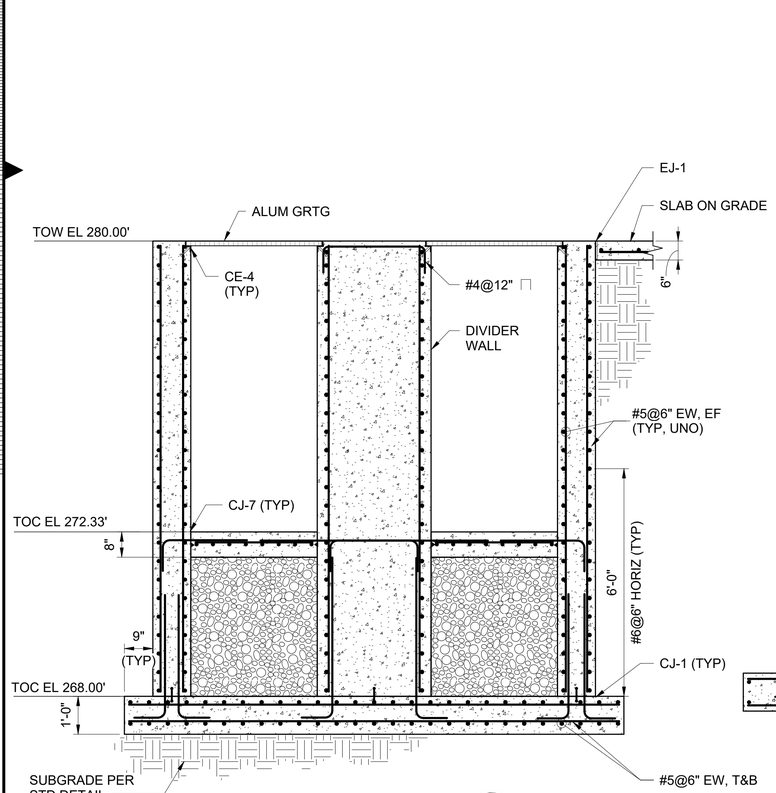

SECTION B 750S101

0 1' 2' 4'
SCALE IN FEET

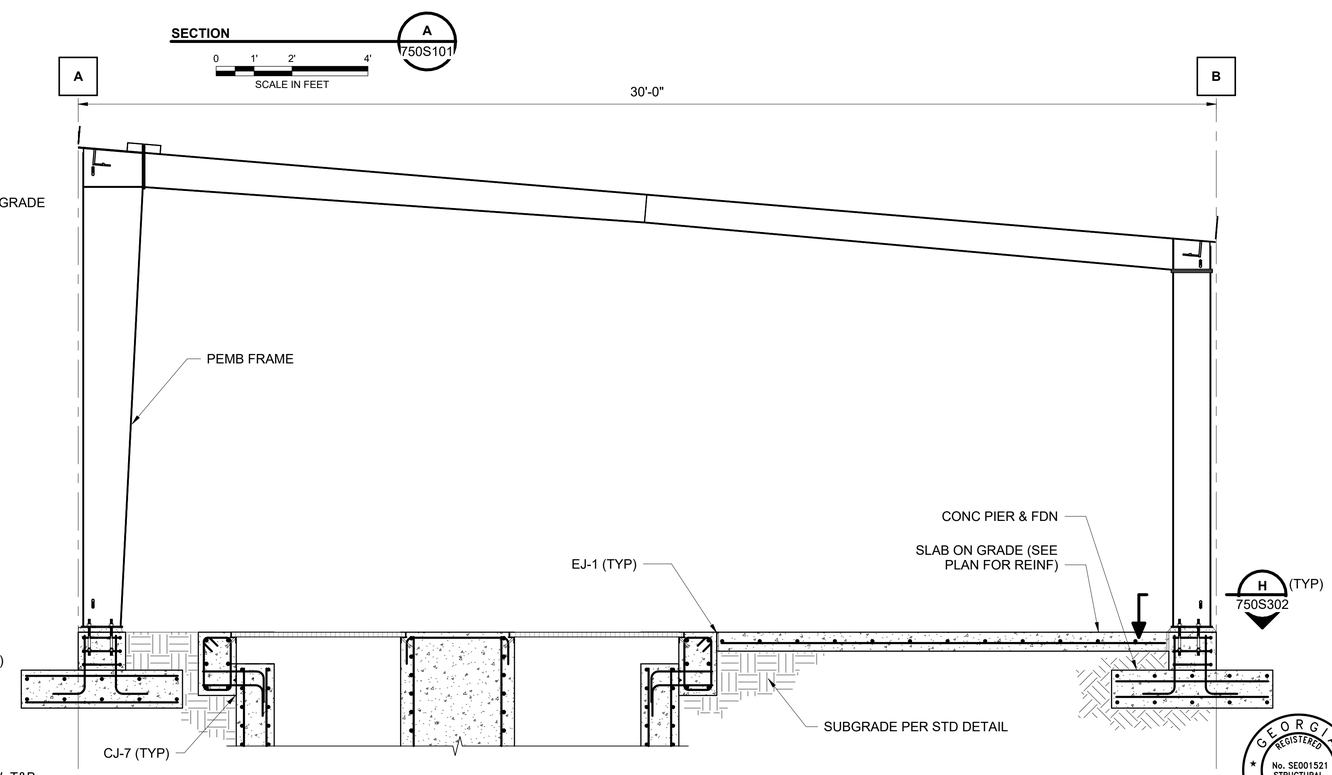

SECTION C 750S102

0 2' 4' 6'
SCALE IN FEET

GEORGIA REGISTERED No. SE001521 STRUCTURAL ENGINEER ALEX GRIFFIN

Alexander Griffin
Expires 2025.12.31
2024.06.26 11:47:25-05'00'

no.	date	by	ckd	description
0	06/26/24	SVW	AMG	ISSUED FOR CONSTRUCTION

BURNS McDONNELL
4004 SUMMIT BLVD. NE, SUITE 1200
ATLANTA, GA 30319
770-587-4776
LICENSEE NO. PEF000100
AUTHORIZATION NO. J550903

date	detailed
NOVEMBER 11, 2023	S. WINGARD
designed	**checked**
S. WINGARD	J. KIENHOLZ

Perry
HOUSTON COUNTY, GEORGIA

EAST PERRY WWTF
UV TREATMENT SECTIONS

project	contract
148538	

drawing **750S301** – rev. **0**

sheet of sheets
file

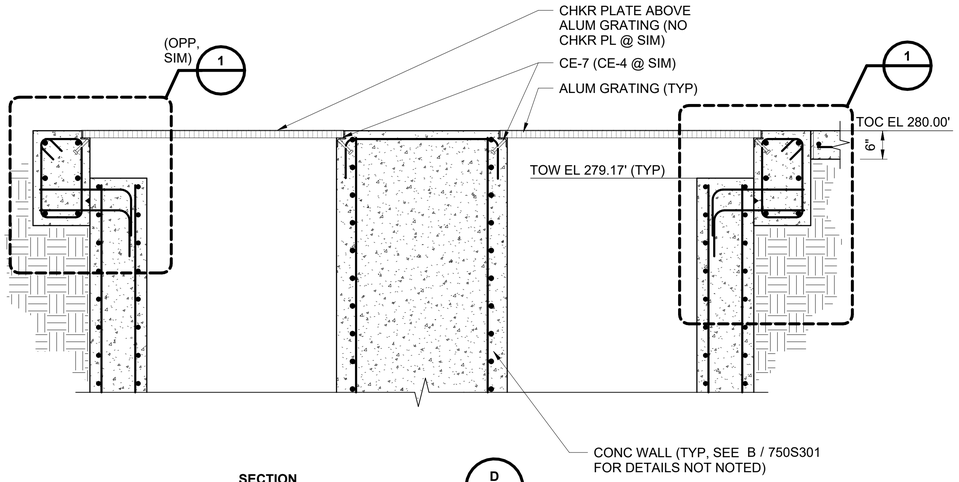

SECTION D 750S102

0 1' 2' 4'
SCALE IN FEET

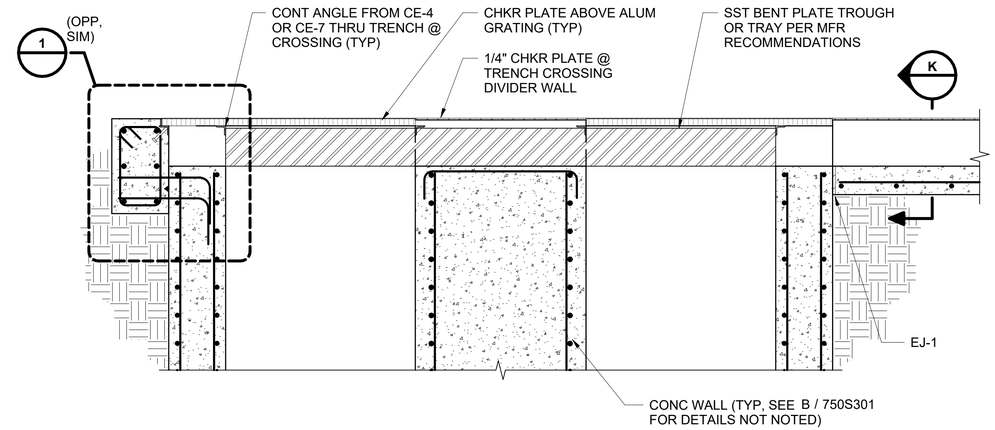

SECTION E 750S102

0 1' 2' 3'
SCALE IN FEET

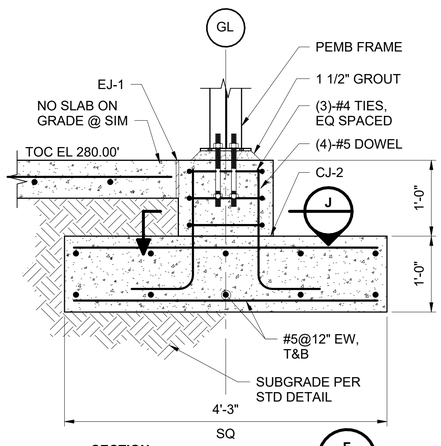

SECTION F 750S102

0 1/2' 1' 2'
SCALE IN FEET

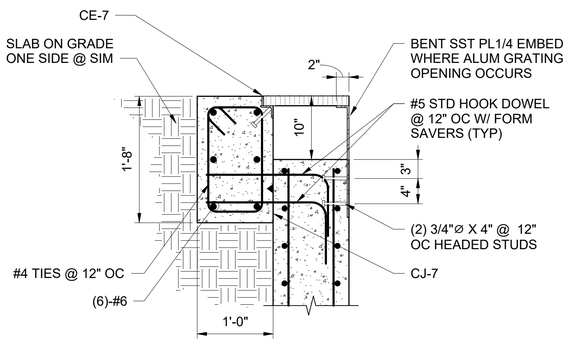

SECTION G 750S102

0 1/2' 1' 2'
SCALE IN FEET

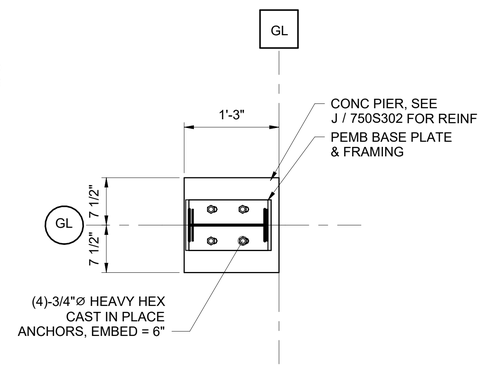

SECTION H 750S301

0 1/2' 1' 2'
SCALE IN FEET

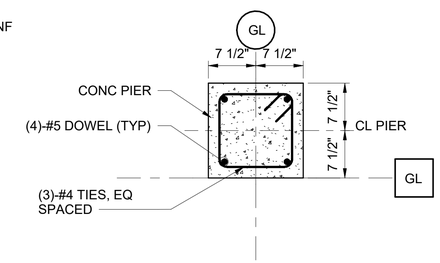

SECTION J

0 1/2' 1' 2'
SCALE IN FEET

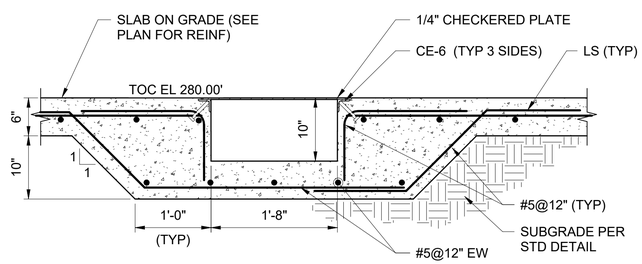

DETAIL K

0 1/2' 1' 2'
SCALE IN FEET

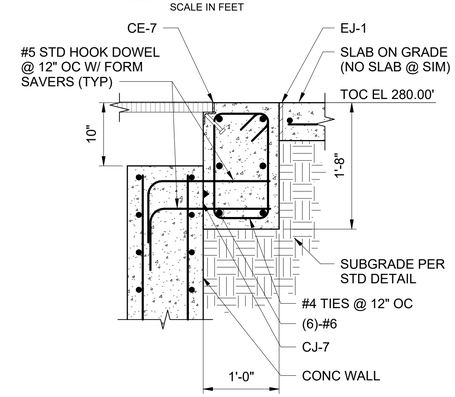

DETAIL 1

0 1/2' 1' 2'
SCALE IN FEET

no.	date	by	ckd	description
0	06/26/24	SVW	AMG	ISSUED FOR CONSTRUCTION

GEORGIA REGISTERED No. SE001521 STRUCTURAL ENGINEER ALEX GRIFFIN

Alexander Griffin
Expires 2025.12.31
2024.06.26 11:47:42-05'00'

BURNS McDONNELL
4004 SUMMIT BLVD. NE, SUITE 1200
ATLANTA, GA 30319
770-587-4776
LICENSEE NO. PEF000100
AUTHORIZATION NO. J550903

date	detailed
DECEMBER 26, 2023	S. WINGARD
designed	**checked**
S. WINGARD	J. KIENHOLZ

Perry

HOUSTON COUNTY, GEORGIA

EAST PERRY WWTF
UV TREATMENT SECTIONS AND DETAILS

project	contract
148538	

drawing **750S302** — rev. **0**

sheet of sheets

file

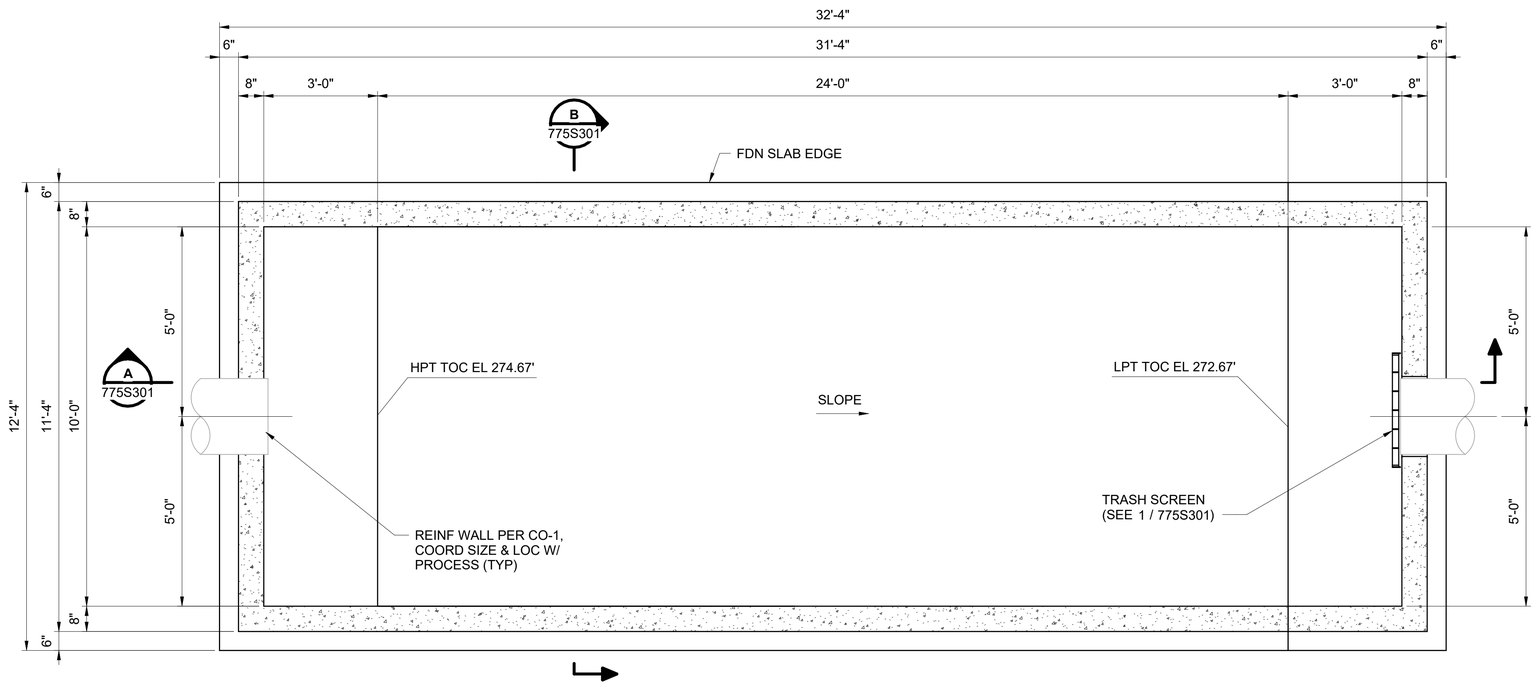

FOUNDATION PLAN

0 1/2' 1' 1 1/2'
SCALE IN FEET

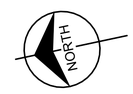

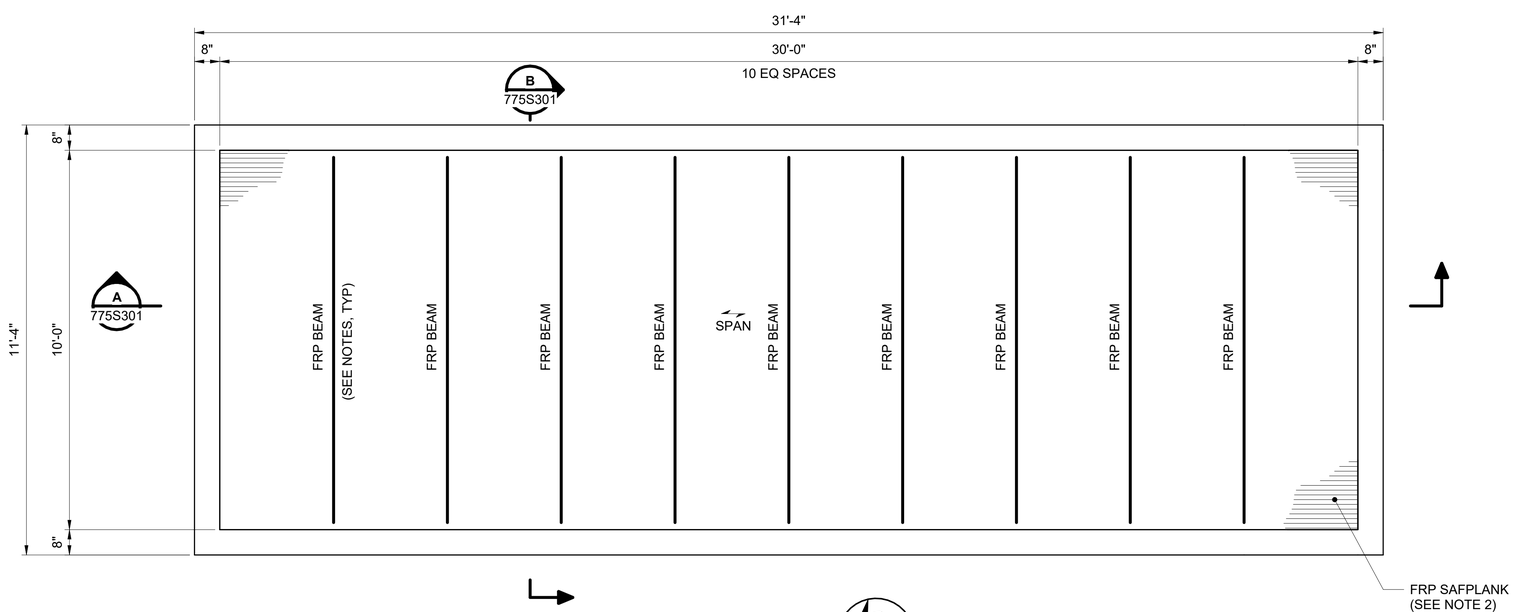

TOP PLAN

0 1/2' 1' 1 1/2'
SCALE IN FEET

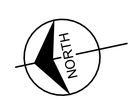

NOTES:

1. SEE S000 SERIES FOR GENERAL NOTES, SPECIAL INSPECTION REQUIREMENTS AND STANDARD DETIALS.
2. PROVIDE SAFPLANK (OR APPROVED EQUAL) FRP FLOOR PLATE. SUPPORT FRAMING TO BE FRP MATERIAL TO MATCH.

DESIGN LOADS:

1. SEE 100S002 FOR STRUCTURAL DESIGN LOADING AND CRITERIA.
2. SUPERIMPOSED DEAD LOAD = 10 PSF
3. DESIGN LOAD BEARING VALUE = 2000 PSF (NET)

FIBER REINFORCED POLYMER (FRP) PLANKS AND FRAMING

1. THE FRP PLANKS, FRAMING AND CONNECTIONS (INCLUDING ANCHORS) ARE A DEFERRED DESIGN. DESIGN SHALL BE PERFORMED IN ACCORDANCE WITH THE CODES SPECIFIED ON THE CONTRACT DOCUMENTS AND SEALED BY A STRUCTURAL ENGINEER REGISTERED IN THE STATE OF GEORGIA.
2. TOP SURFACE OF ALL PLANKS SHALL HAVE A MECHANICALLY ADHERED NON-SKID GRIT SURFACE.
3. ALL FIELD CUT EDGES OF FRP PRODUCTS SHALL BE SMOOTH AND SEALED WITHA CATALYZED RESIN OF EQUAL OR SUPERIOR CORROSION RESISTANCE TO THE MANUFACTURED PRODUCT.
4. REFER TO SPECIFICATION SECTION 06 70 00 FOR ADDITIONAL DESIGN REQUIREMENTS.

GEORGIA REGISTERED No. SE001521 STRUCTURAL ENGINEER ALEX GRIFFIN

Alexander Griffin
Expires 2025.12.31
2024.06.26 11:47:59-05'00'

no.	date	by	ckd	description
0	06/26/24	SVW	AMG	ISSUED FOR CONSTRUCTION

BURNS McDONNELL
4004 SUMMIT BLVD. NE, SUITE 1200
ATLANTA, GA 30319
770-587-4776
LICENSEE NO. PEF000100
AUTHORIZATION NO. J550903

date	detailed
MARCH 13, 2023	S. WINGARD
designed	**checked**
S. WINGARD	J. KIENHOLZ

Perry
HOUSTON COUNTY, GEORGIA

EAST PERRY WWTF
CASCADE AERATION PLAN VIEWS

project	contract
148538	

drawing **775S101** – rev. **0**

sheet of sheets

file

Millimeters
Scale For Microfilming
Inches

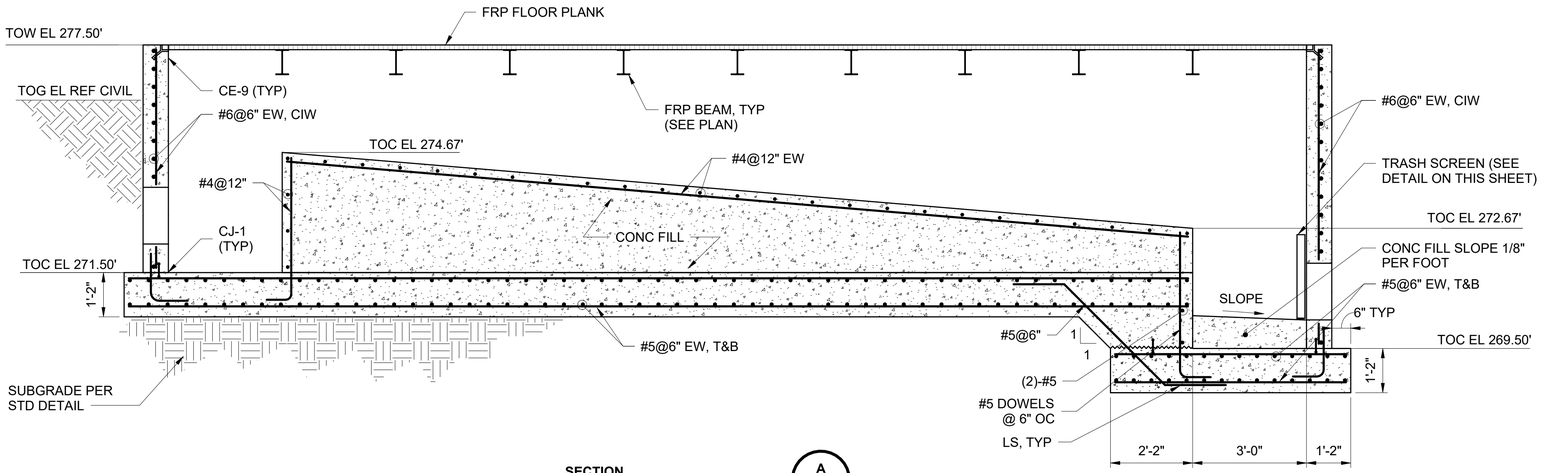

SECTION A 775S101

0 1' 2' 4'
SCALE IN FEET

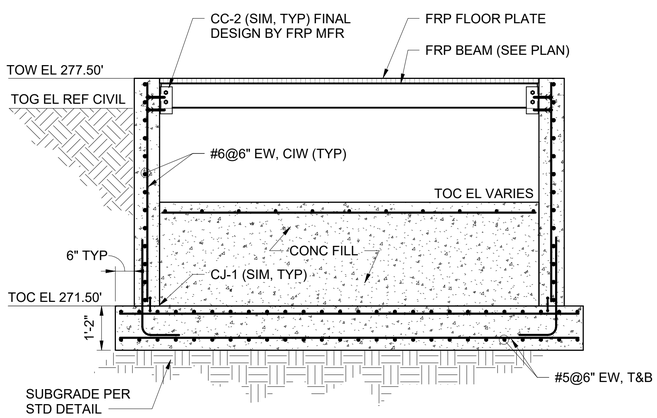

SECTION B 775S101

0 1' 2' 4'
SCALE IN FEET

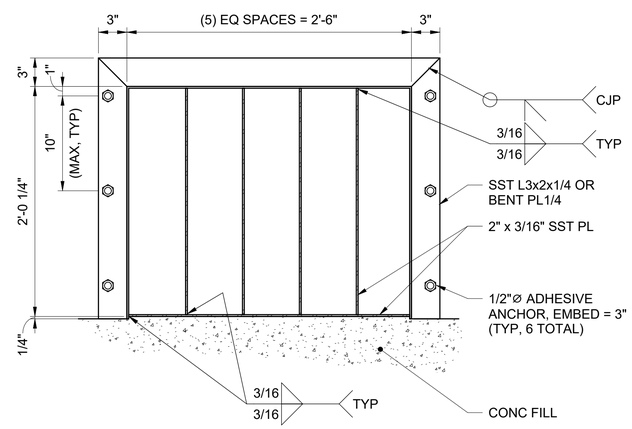

DETAIL 1

0 1/2' 1' 1 1/2'
SCALE IN FEET

no.	date	by	ckd	description
0	06/26/24	SVW	AMG	ISSUED FOR CONSTRUCTION

GEORGIA REGISTERED No. SE001521 STRUCTURAL ENGINEER ALEX GRIFFIN

Alexander Griffin
Expires 2025.12.31
2024.06.26 11:48:13-05'00'

BURNS McDONNELL
4004 SUMMIT BLVD. NE, SUITE 1200
ATLANTA, GA 30319
770-587-4776
LICENSEE NO. PEF000100
AUTHORIZATION NO. J550903

date	detailed
MARCH 30,2023	S. WINGARD
designed	**checked**
S. WINGARD	J. KIENHOLZ

Perry

HOUSTON COUNTY, GEORGIA

EAST PERRY WWTF
CASCADE AERATION SECTIONS AND DETAILS

project	contract
148538	

drawing 775S301 – rev. 0

sheet of sheets

file

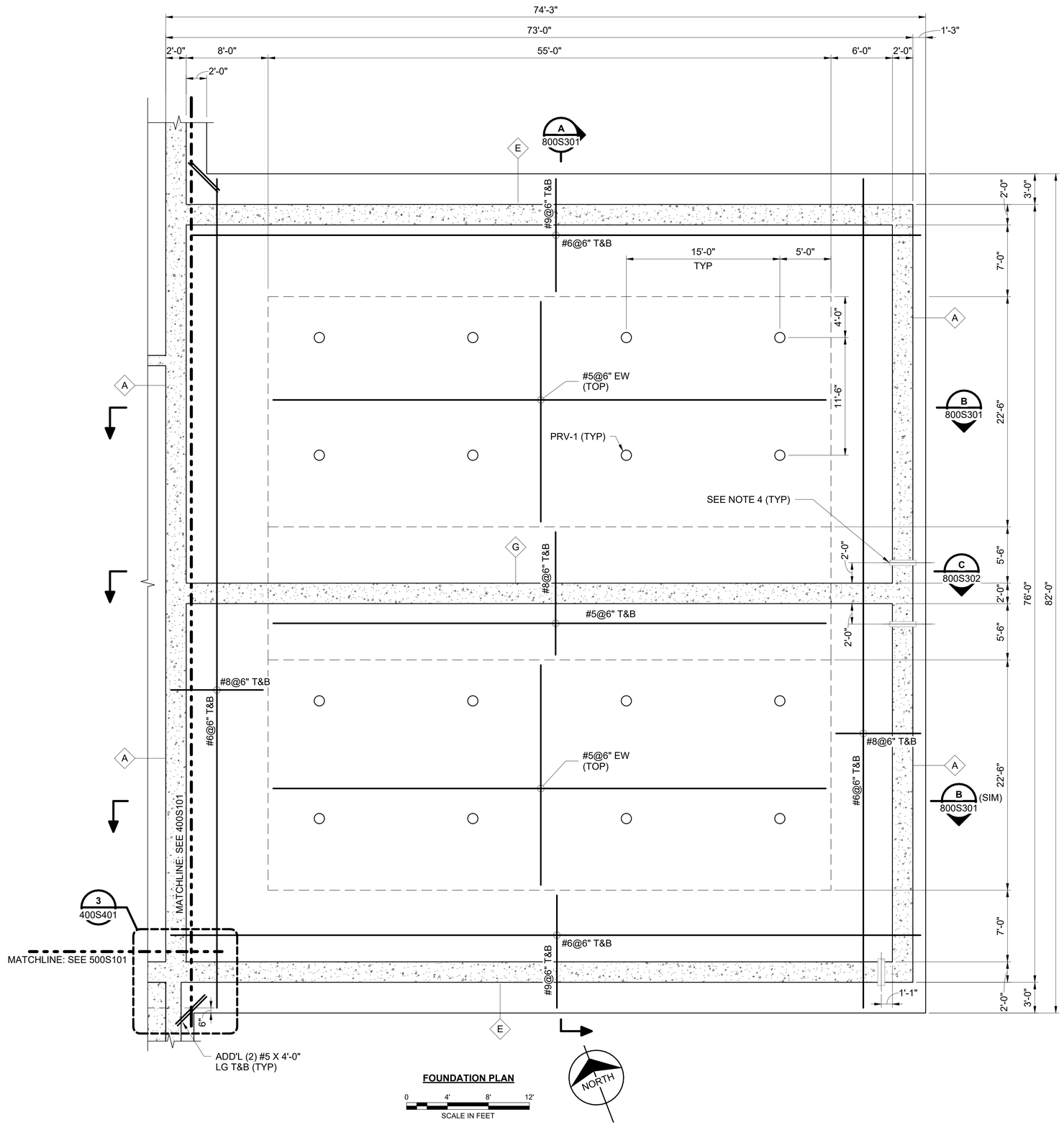

FOUNDATION PLAN

NOTES:

1. SEE S000 SERIES FOR GENERAL NOTES, SPECIAL INSPECTION REQUIREMENTS AND STANDARD DETAILS.
2. INTERIOR WALLS SHALL ACHIEVE DESIGN STRENGTH AS DEMONSTRATED BY CYLINDER TESTING PRIOR TO LEAK TEST AND BACKFILL.
3. CONTRACTOR TO LOCATE CONSTRUCTION JOINTS PER SPECIFICATION 03 30 00 AND SUBMIT FOR APPROVAL BY ENGINEER PRIOR TO CONSTRUCTION.
4. COORDINATE PIPE PENETRATIONS W/ PROCESS. REINFORCE WALL PER CO-1
5. DESIGN LOAD BEARING VALUE = 2500 PSF (NET)

X DENOTES WALL TAG. SEE TYP DETAIL ON 400S303 FOR REINF.

GEORGIA REGISTERED No. SE001521 STRUCTURAL ENGINEER ALEX GRIFFIN

Alexander Griffin
Expires 2025.12.31
2024.06.26 11:48:30-05'00'

no.	date	by	ckd	description
0	06/26/24	SVW	AMG	ISSUED FOR CONSTRUCTION

BURNS McDONNELL
4004 SUMMIT BLVD. NE, SUITE 1200
ATLANTA, GA 30319
770-587-4776
LICENSEE NO. PEF000100
AUTHORIZATION NO. J550903

date	detailed
JULY 25, 2023	S. WINGARD
designed	**checked**
S. WINGARD	J. KIENHOLZ

Perry

HOUSTON COUNTY, GEORGIA

EAST PERRY WWTF

SOLIDS HOLDING BASIN A FOUNDATION PLAN

project	contract
148538	

drawing **800S101** rev. **0**

sheet of sheets

file

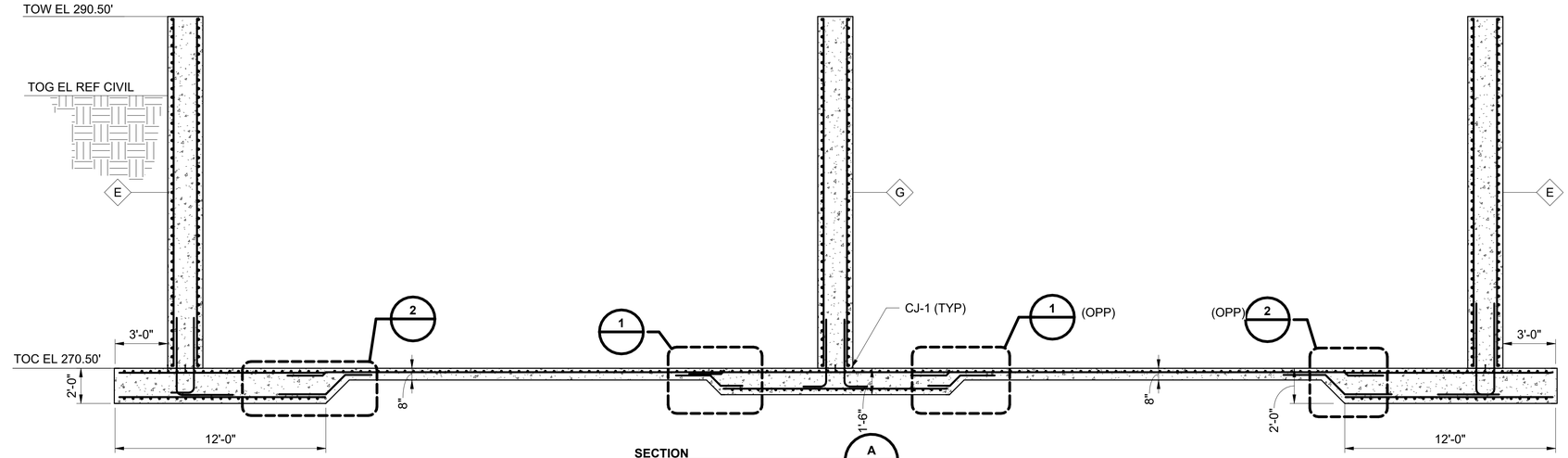

SECTION A 800S101

0 2' 4' 8'
SCALE IN FEET

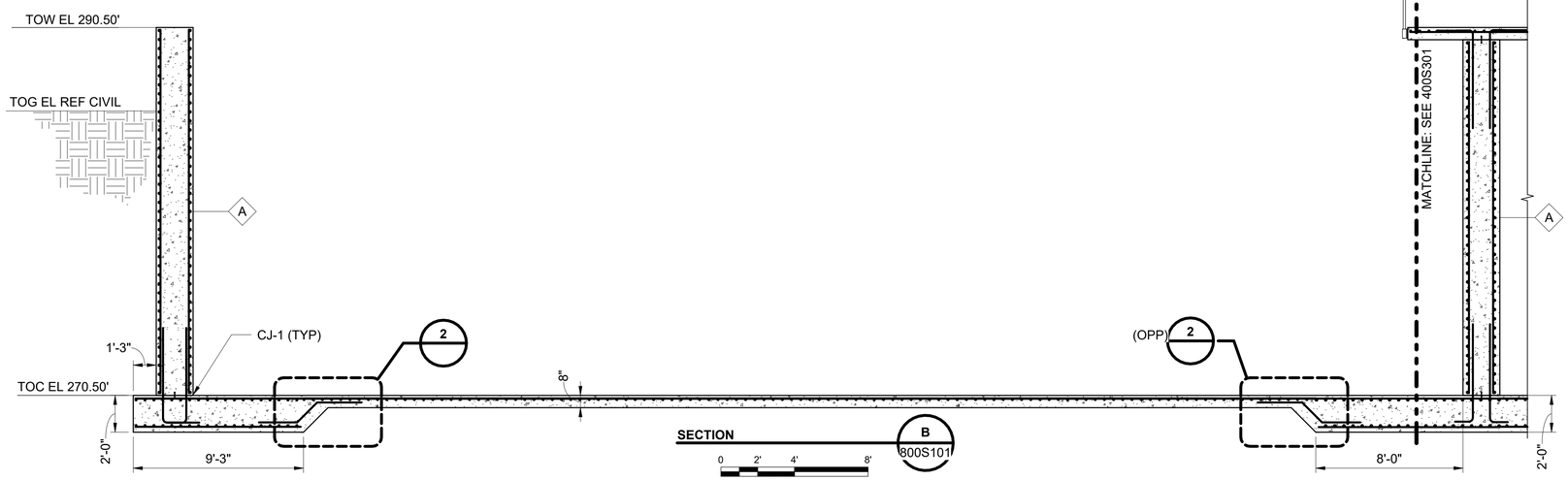

SECTION B 800S101

0 2' 4' 8'
SCALE IN FEET

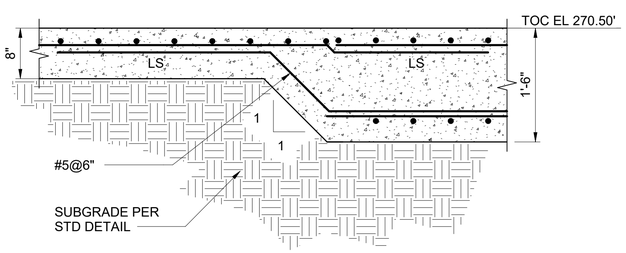

DETAIL 1

0 1/2' 1' 2'
SCALE IN FEET

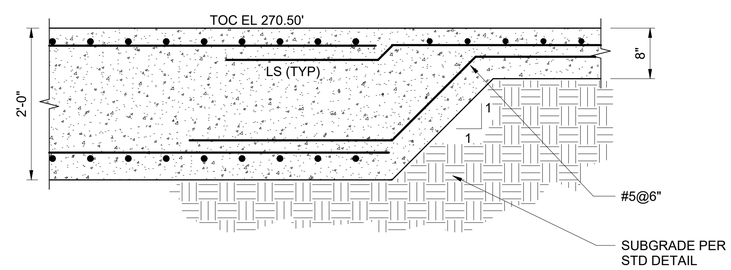

DETAIL 2

0 1/2' 1' 2'
SCALE IN FEET

GEORGIA REGISTERED No. SE001521 STRUCTURAL ENGINEER ALEX GRIFFIN

Alexander Griffin
Expires 2025.12.31
2024.06.26 11:48:51-05'00'

no.	date	by	ckd	description
0	06/26/24	SVW	AMG	ISSUED FOR CONSTRUCTION

BURNS McDONNELL
4004 SUMMIT BLVD. NE, SUITE 1200
ATLANTA, GA 30319
770-587-4776
LICENSEE NO. PEF000100
AUTHORIZATION NO. J550903

date	detailed
JULY 25, 2023	S. WINGARD
designed	**checked**
S. WINGARD	J. KIENHOLZ

Perry

HOUSTON COUNTY, GEORGIA

EAST PERRY WWTF

SOLIDS HOLDING BASIN A SECTIONS SHEET 1 AND DETAILS

project	contract
148538	

drawing **800S301** — rev. **0**

sheet of sheets

file

Millimeters
Scale For Microfilming
Inches

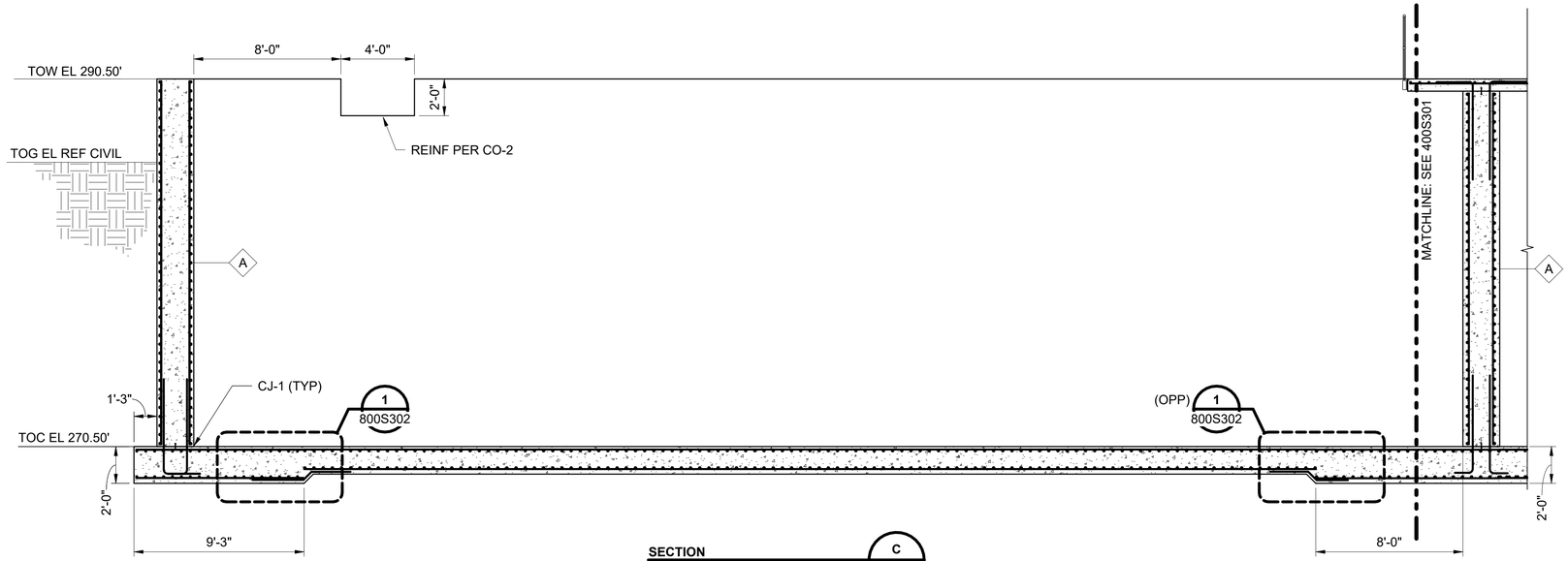

SECTION C / 800S101

0 2' 4' 8'
SCALE IN FEET

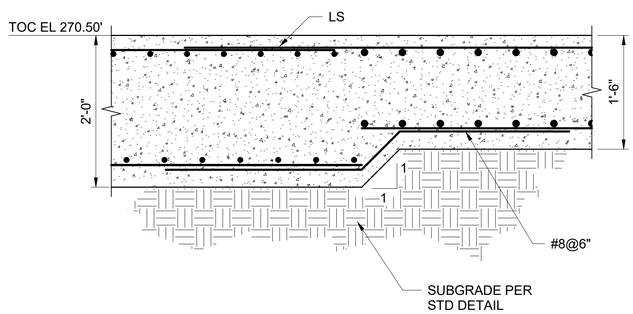

DETAIL 1

0 1/2' 1' 2'
SCALE IN FEET

no.	date	by	ckd	description
0	06/26/24	SVW	AMG	ISSUED FOR CONSTRUCTION

BURNS McDONNELL
4004 SUMMIT BLVD. NE, SUITE 1200
ATLANTA, GA 30319
770-587-4776
LICENSEE NO. PEF000100
AUTHORIZATION NO. J550903

date	detailed
FEBRAURY 13, 2024	S. WINGARD
designed	**checked**
S. WINGARD	J. KIENHOLZ

Perry
HOUSTON COUNTY, GEORGIA

GEORGIA REGISTERED No. SE001521 STRUCTURAL ENGINEER ALEX GRIFFIN

Alexander Griffin
Expires 2025.12.31
2024.06.26 11:49:06-05'00'

EAST PERRY WWTF
SOLIDS HOLDING BASIN A SECTIONS SHEET 2 AND DETAILS

project	contract
148538	

drawing **800S302** – rev. **0**

sheet of sheets

file

STRUCTURAL DESIGN LOADING/CRITERIA

1. DEAD LOADS:
   A. SELF WEIGHT OF MATERIALS OF CONSTRUCTION
   B. WEIGHT OF FIXED SERVICE EQUIPMENT
      a. AS INDICATED ON THE STRUCTURAL DRAWINGS FOR EQUIPMENT WEIGHING IN EXCESS OF 300 LBS. FRAMING AND FOUNDATIONS ARE DESIGNED FOR EQUIPMENT WHICH SATISFIES THE CONTRACT SPECIFICATIONS.
      b. IF EQUIPMENT FURNISHED IS HEAVIER THAN THE WEIGHTS INDICATED, OR REQUIRES STRUCTURAL CHANGES FOR ANY OTHER REASON, PROVIDE ENGINEERING DESIGN CALCULATIONS AND ADDITIONAL STRUCTURAL WORK NECESSARY TO SUPPORT ALL LOADS IN ACCORDANCE WITH THE DESIGN STANDARDS SPECIFIED ABOVE, AT NO ADDITIONAL COST TO THE OWNER AND WITH NO INCREASE IN CONTRACT TIME.
   C. SUPERIMPOSED DEAD LOAD..... 10 PSF
   D. EQUIPMENT LOAD
      a. BELT PRESS..... 52500 LB
      b. SEE PROCESS, MECHANICAL AND ELECTRICAL DRAWINGS
2. LIVE LOADS:
   A. SLAB ON GRADE..... 250 PSF
   B. ROOF LIVE LOAD:..... 20 PSF
3. WIND DESIGN DATA:
   A. INTERNAL PRESSURE COEFFICIENT..... ±0.55
   B. COMPONENTS AND CLADDING LOADS..... SEE DIAGRAM ON THIS SHEET
      a. COMPONENT AND CLADDING LOADS SHOWN ARE FOR BUILDING COMPONENTS OUTSIDE THE SCOPE OF THE PRE-ENGINEERED METAL BUILDING SYSTEM. PRE-ENGINEERED METAL BUILDING SYSTEM MANUFACTURER SHALL BE RESPONSIBLE FOR DEVELOPING ALL COMPONENT AND CLADDING LOADS FOR DESIGN OF THE BUILDING INCLUDING SECONDARY MEMBERS AND WALL AND ROOF COVERINGS.
4. SEISMIC DESIGN DATA:
   A. BASIC SEISMIC FORCE RESISTING SYSTEM(S): DELEGATED DESIGN BY THE PRE-ENGINEERED METAL BUILDING MANUFACTURER.
   B. SEE DRAWING 100S002 FOR SEISMIC ACCELERATIONS
5. GEOTECHNICAL DATA:
   A. DESIGN LOAD BEARING VALUE..... 2,000 PSF (NET)

PRE-ENGINEERED METAL BUILDING SYSTEMS

1. THE SOLIDS HANDLING BUILDING IS A DELEGATED DESIGN, PREFABRICATED METAL BUILDING SYSTEM. REFER TO PROJECT SPECIFICATIONS.
2. DESIGN OF SOLIDS HANDLING BUILDING SHALL INCLUDE ACCOMMODATIONS FOR A FUTURE LEAN TO EXPANSION AS SHOWN ON PLAN DRAWINGS.
3. DESIGN, FABRICATE, AND ERECT METAL BUILDINGS SYSTEMS IN ACCORDANCE WITH MBMA METAL BUILDING SYSTEMS MANUAL AS MODIFIED BY CONTRACT DOCUMENTS.
4. SUBMIT SHOP DRAWINGS AND STRUCTURAL DESIGN ANALYSIS OF METAL BUILDINGS SYSTEM PREPARED AND SEALED BY QUALIFIED PROFESSIONAL ENGINEER.
   A. INCLUDE DEVELOPMENT OF LOADS, DESCRIPTION OF INDIVIDUAL AND COMBINED LOAD CASES, DESCRIPTION OF MATERIALS, COMPARISON OF PERMITTED STRESSES VERSUS COMPUTED STRESSES, CALCULATION OF DEFLECTIONS, AND ANCHOR ROD LAYOUT.
   B. DESIGN ANCHORAGE CONNECTIONS OF THE METAL BUILDING SYSTEM TO TRANSMIT ONLY VERTICAL AND HORIZONTAL FORCES (NO MOMENTS) TO THE FOUNDATIONS. SUBMIT SERVICE-LEVEL REACTIONS AT EACH ANCHORAGE CONNECTION IN ALL THREE PRINCIPAL DIRECTIONS FOR EACH INDIVIDUAL (NOT COMBINED) LOAD CASE, SUCH AS DEAD, COLLATERAL, FLOOR LIVE, ROOF LIVE, WIND, EARTHQUAKE, ETC.
   C. THE FOUNDATION AND ANCHOR BOLT LAYOUT SHOWN ON THESE DRAWINGS IS BASED ON THE COLUMN REACTIONS SHOWN AND ON INFORMATION PROVIDED BY VARCO PRUDEN BUILDINGS.
   D. DO NOT CONSTRUCT FOUNDATIONS OR FABRICATE FOUNDATION REINFORCING STEEL UNTIL METAL BUILDING SYSTEM SHOP DRAWINGS AND DESIGN ANALYSIS ARE APPROVED. WHERE SUBMITTED REACTIONS EXCEED ASSUMED REACTIONS AS INDICATED IN NOTE 8, FOUNDATIONS ARE SUBJECT TO CHANGE. CONTACT ENGINEER.
5. PROVIDE ANCHOR RODS OF SIZE, QUANTITY, AND LAYOUT REQURED BY METAL BUILDING MANUFACTURER. OBTAIN PRIOR APPROVAL OF ENGINEER IF THESE ADJUSTMENTS REQUIRED CHANGING ANY STRUCTURAL OR ARCHITECTURAL DIMENSIONS OR DETAILS.
6. PROVIDE PRETENSIONED BOLTS FOR PRIMARY FRAME CONNECTIONS.
7. PROVIDE ADDITIONAL FRAMING AROUND WALL AND ROOF OPENINGS, AND WHERE REQUIRED TO SUPPORT AND BRACE SUSPENDED ITEMS SUCH AS DUCTWORK, PIPING, LIGHTING, EQUIPMENT, ETC.
8. BUILDING COLUMN REACTIONS (ALLOWABLE):
   END FRAMES:
      MAX VERTICAL: 17.1 KIPS
      MIN VERTICAL: -13.1 KIPS
      MAX HORIZONTAL: 6.4 KIPS
   INTERIOR FRAMES:
      MAX VERTICAL: 12 KIPS
      MIN VERTICAL: -8.2 KIPS
      MAX HORIZONTAL: 4.1 KIPS
   WIND COLUMNS:
      MAX VERTICAL: 9 KIPS
      MIN VERTICAL: -8.1 KIPS
      MAX HORIZONTAL: 4.1 KIPS

COMPONENTS & CLADDING SCHEDULE (PSF)

PER ASCE 7-16 FIGURE 30.7-1

EFFECTIVE AREA	ZONE 1		1C		2		2'		2C		3		3'		3C		4		5	
A ≤ 10 ft2	24.05	-46.69	24.05	-66.34	24.05	-52.35	24.05	-60.84	24.05	-79.35	24.05	-66.50	24.05	-89.14	24.05	-105.36	41.03	-43.86	41.03	-63.67
A = 20 ft2	22.64	-46.69	22.64	-65.10	22.64	-50.94	22.64	-59.99	22.64	-77.32	22.64	-60.84	22.64	-80.65	22.64	-96.29	39.62	-42.45	39.62	-63.67
A = 50 ft2	21.79	-46.69	21.79	-63.45	21.79	-50.09	21.79	-58.86	21.79	-74.64	21.79	-55.18	21.79	-69.33	21.17	-84.29	38.20	-41.03	38.20	-58.01
A = 100 ft2	21.22	-46.69	21.22	-62.21	21.22	-49.52	21.22	-58.01	21.22	-72.61	21.22	-49.52	21.22	-60.84	21.22	-75.21	35.94	-38.20	35.94	-52.35
A ≥ 500 ft2	21.22	-46.69	21.22	-59.32	21.22	-49.52	21.22	-58.01	21.22	-69.72	21.22	-49.52	19.51	-60.84	21.22	-72.32	32.54	-35.37	32.54	-41.03

NOTES:
1. POSITIVE PRESSURES ACTING TOWARDS SURFACE, NEGATIVE PRESSURES ACTING AWAY FROM SURFACE.
2. INTERPOLATION CAN BE USED FOR EFFECTIVE AREAS THAT ARE BETWEEN THOSE VALUES SHOWN.
3. VALUES LISTED ARE ULTIMATE VALUES. REDUCE TO ALLOWABLE LOADS WITH A FACTOR 0.6.
4. EACH COMPONENT MUST BE DESIGNED FOR MAXIMUM POSITIVE AND NEGATIVE PRESSURES.
5. "a" = 4FT ; "a1" = 3.25FT

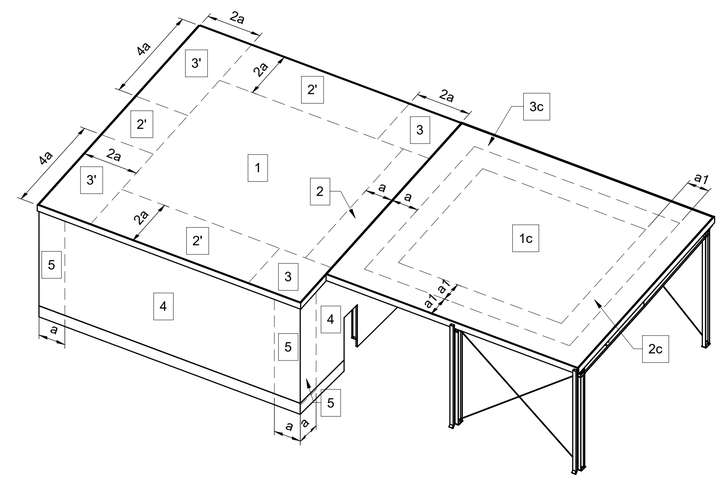

C&C DIAGRAM
NOT TO SCALE

no.	date	by	ckd	description
0	06/26/24	SVW	AMG	ISSUED FOR CONSTRUCTION

BURNS McDONNELL
4004 SUMMIT BLVD. NE, SUITE 1200
ATLANTA, GA 30319
770-587-4776
LICENSEE NO. PEF000100
AUTHORIZATION NO. J550903

date: JANUARY 15, 2024
detailed: S. WINGARD
designed: S. WINGARD
checked: J. KIENHOLZ

Perry
HOUSTON COUNTY, GEORGIA

GEORGIA REGISTERED No. SE001521 STRUCTURAL ENGINEER ALEX GRIFFIN

Alexander Griffin
Expires 2025.12.31
2024.06.26 11:49:36-05'00'

EAST PERRY WWTF
SOLIDS HANDLING LOAD MAPS

project: 148538
contract:
drawing: 850S100
rev.: 0
sheet of sheets
file

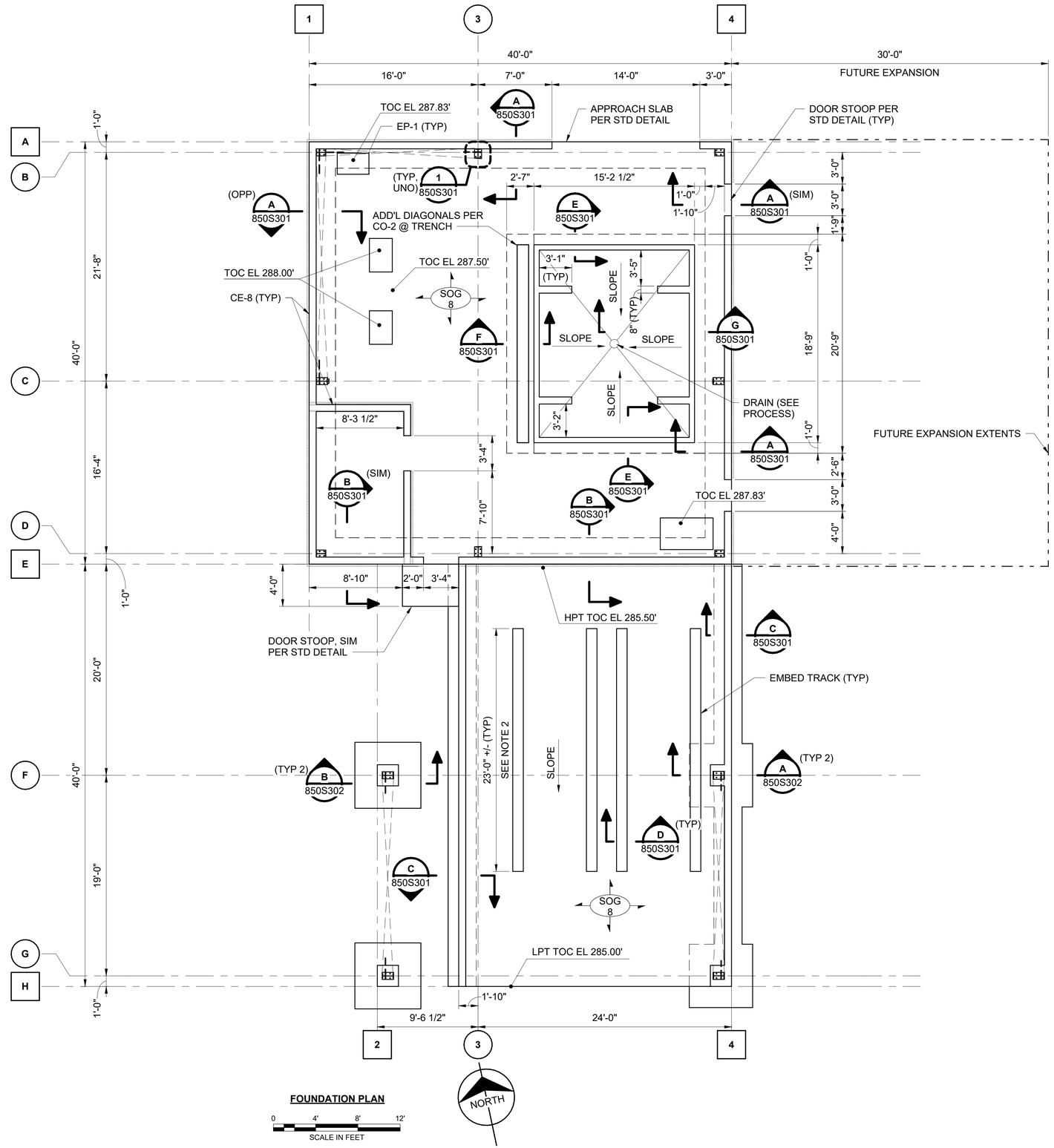

FOUNDATION PLAN

0 4' 8' 12'
SCALE IN FEET

NOTES:

1. SEE S000 SERIES FOR GENERAL NOTES, SPECIAL INSPECTION REQUIREMENTS AND STANDARD DETAILS.
2. COORDINATE ANGLE EMBEDED TRACK W/ DUMPSTER PER PROCESS.
3. PEMB SHALL BE DESIGNED FOR FUTURE EXPANSION LEAN TO AS INDICATED ON THIS SHEET.

SOG 8 — DENOTES 8" SLAB ON GRADE REINF W/ #5@12" OC, MID-SLAB.

DENOTES PROPOSED BRACED FRAME BAYS.

no.	date	by	ckd	description
0	06/26/24	SVW	AMG	ISSUED FOR CONSTRUCTION

GEORGIA REGISTERED No. SE001521 STRUCTURAL ENGINEER ALEX GRIFFIN

Alexander Griffin
Expires 2025.12.31
2024.06.26 11:49:51-05'00'

BURNS McDONNELL
4004 SUMMIT BLVD. NE, SUITE 1200
ATLANTA, GA 30319
770-587-4776
LICENSEE NO. PEF000100
AUTHORIZATION NO. J550903

date	detailed
APRIL 4, 2023	S. WINGARD
designed	**checked**
S. WINGARD	J. KIENHOLZ

Perry
HOUSTON COUNTY, GEORGIA

EAST PERRY WWTF
SOLIDS HANDLING FOUNDATION PLAN

project	contract
148538	

drawing **850S101** — rev. **0**

sheet of sheets
file

Scale For Microfilming: Millimeters / Inches

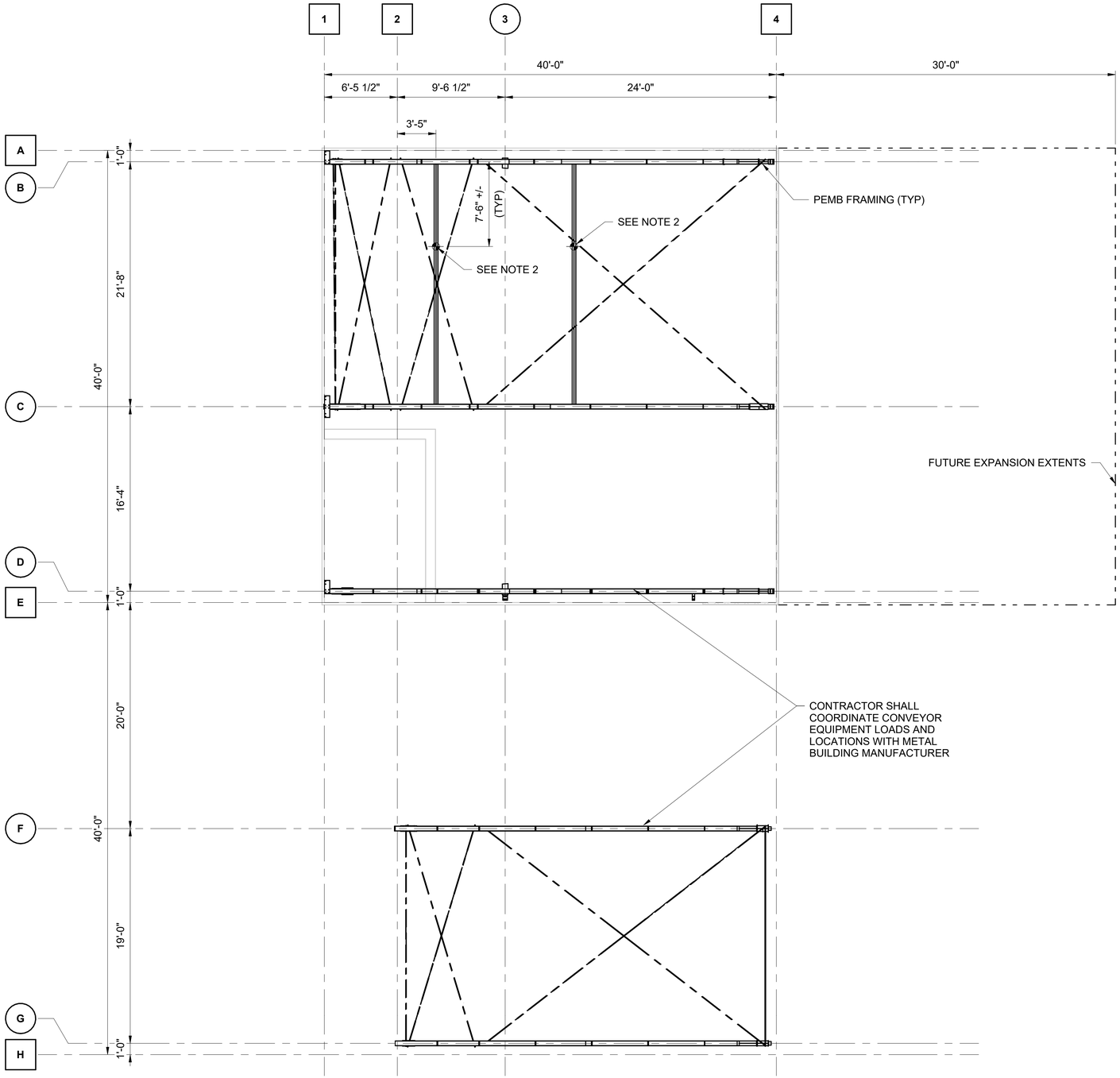

ROOF FRAMING PLAN

0 4' 8' 12'
SCALE IN FEET

NORTH

NOTES:

1. SEE S000 SERIES FOR GENERAL NOTES, SPECIAL INSPECTION REQUIREMENTS AND STANDARD DETAILS.
2. PEMB MANUFACTURER TO PROVIDE ADDITIONAL BEAMS PER THIS ROOF PLAN FOR PIPE SUPPORT HANGERS. MAX ALLOWABLE VERTICAL LOAD = 1.5 KIP EACH SUPPORT. SEE PROCESS FOR PIPE SUPPORT EXACT LOCATION, TYPE AND SIZE.

DENOTES PROPOSED BRACED FRAME BAYS.

no.	date	by	ckd	description
0	06/26/24	SVW	AMG	ISSUED FOR CONSTRUCTION

GEORGIA REGISTERED No. SE001521 STRUCTURAL ENGINEER ALEX GRIFFIN

Alexander Griffin
Expires 2025.12.31
2024.06.26 11:50:15-05'00'

BURNS McDONNELL
4004 SUMMIT BLVD. NE, SUITE 1200
ATLANTA, GA 30319
770-587-4776
LICENSEE NO. PEF000100
AUTHORIZATION NO. J550903

date	detailed
APRIL 11, 2024	S. WINGARD
designed	**checked**
S. WINGARD	J. KIENHOLZ

Perry
HOUSTON COUNTY, GEORGIA

EAST PERRY WWTF
SOLIDS HANDLING ROOF PLAN

project	contract
148538	

drawing **850S102** – rev. **0**

sheet of sheets

file

Millimeters
Scale For Microfilming
Inches

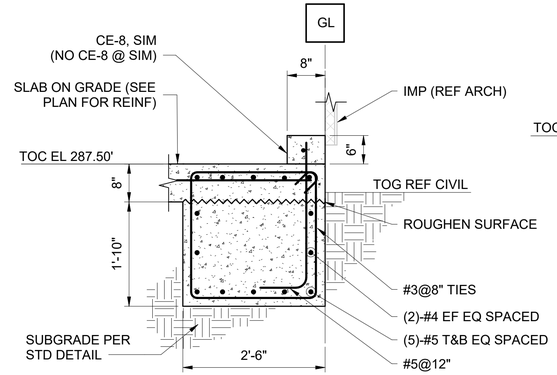

SECTION A 850S101

SCALE IN FEET

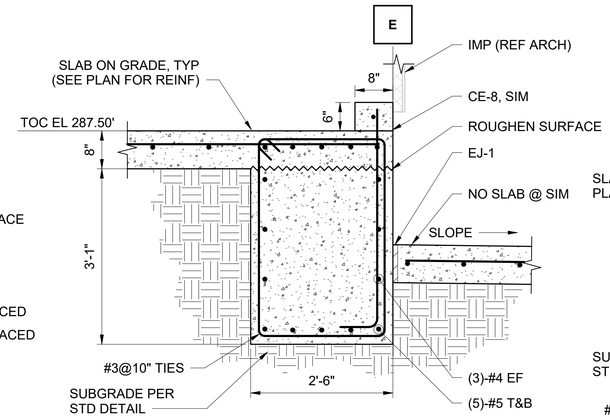

SECTION B 850S101

SCALE IN FEET

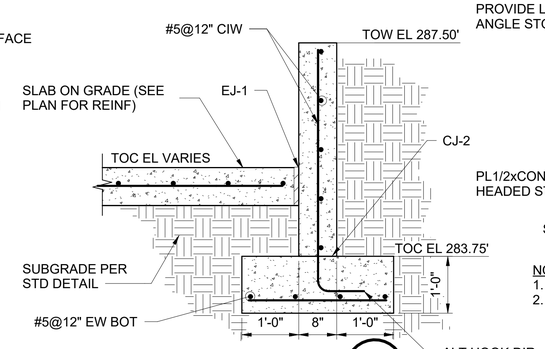

SECTION C 850S101

SCALE IN FEET

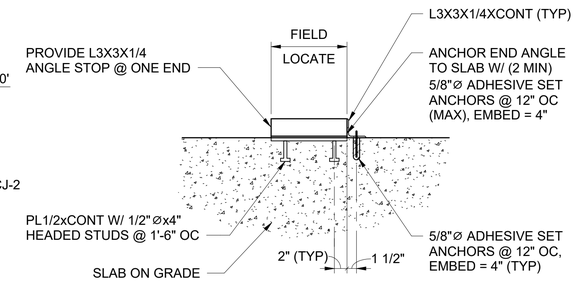

NOTES:
1. ALL STEEL TO BE SST. ANCHORS TO BE 304 SST.
2. CONTRACTOR TO COORDINATE DUMPSTER WHEEL WIDTH TO CONFIRM EMBED WIDTH AND ANGLE STOP PRIOR TO CONSTRUCTION.

SECTION D 850S101

SCALE IN FEET

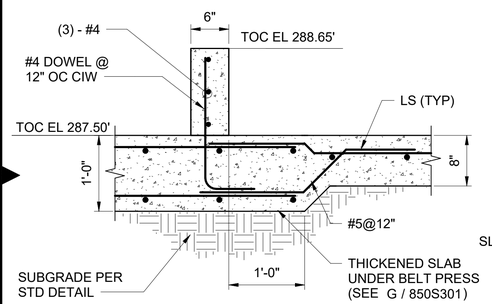

SECTION E 850S101

SCALE IN FEET

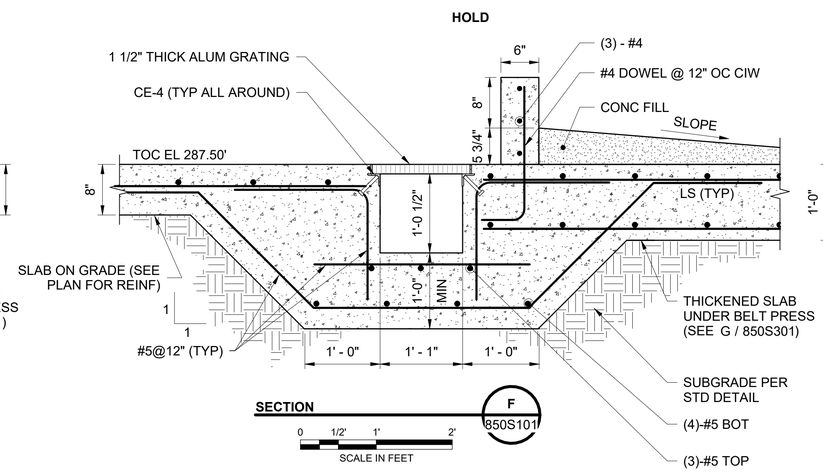

SECTION F 850S101

SCALE IN FEET

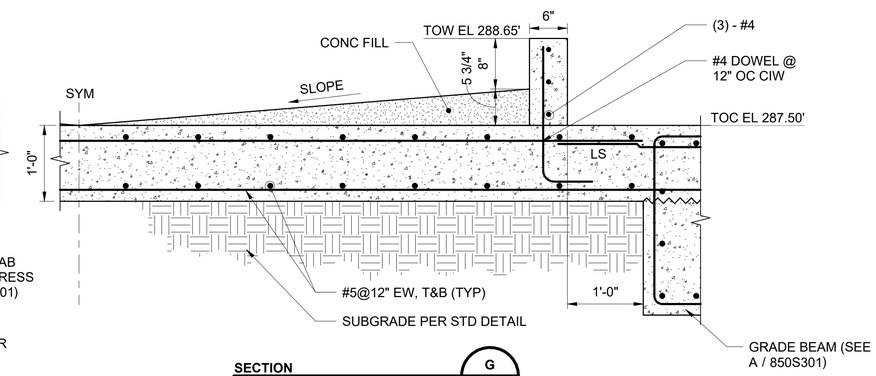

SECTION G 850S101

SCALE IN FEET

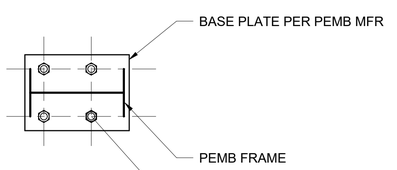

DETAIL 1 850S101

SCALE IN FEET

GEORGIA REGISTERED No. SE001521 STRUCTURAL ENGINEER ALEX GRIFFIN

Alexander Griffin
Expires 2025.12.31
2024.06.26 11:50:31-05'00'

no.	date	by	ckd	description
0	06/26/24	SVW	AMG	ISSUED FOR CONSTRUCTION

BURNS McDONNELL
4004 SUMMIT BLVD. NE, SUITE 1200
ATLANTA, GA 30319
770-587-4776
LICENSEE NO. PEF000100
AUTHORIZATION NO. J550903

date	detailed
AUGUST 9, 2023	B. BAIR
designed	**checked**
S. WINGARD	J. KIENHOLZ

Perry

HOUSTON COUNTY, GEORGIA

EAST PERRY WWTF
SOLIDS HANDLING SECTIONS & DETAILS

project	contract
148538	

drawing **850S301** – rev. **0**

sheet of sheets

file

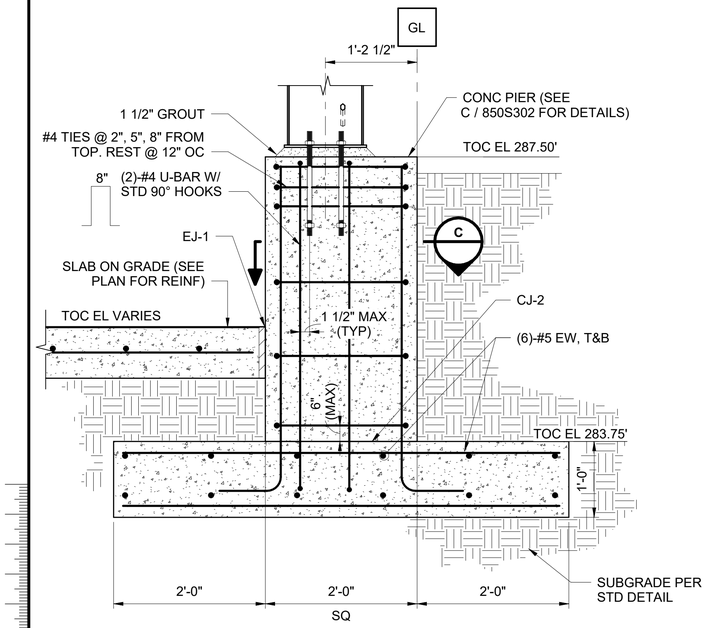

SECTION A / 850S101

0 1/2' 1' 2'
SCALE IN FEET

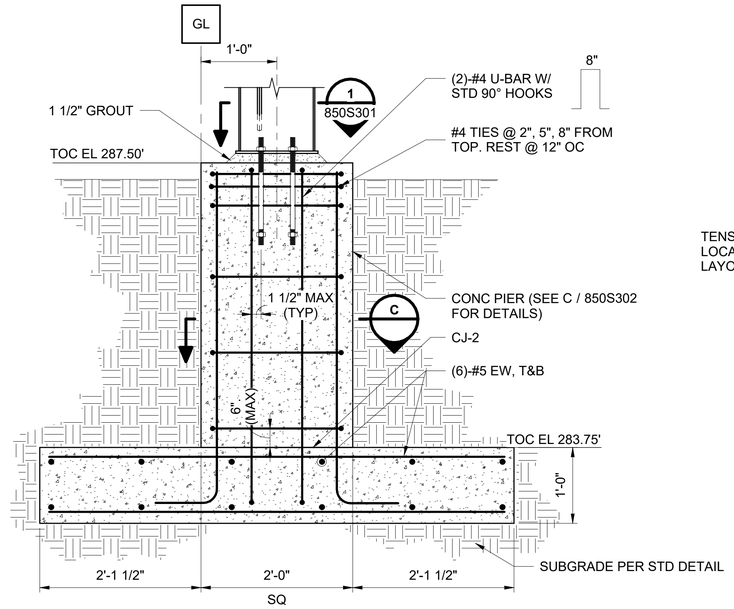

SECTION B / 850S101

0 1/2' 1' 2'
SCALE IN FEET

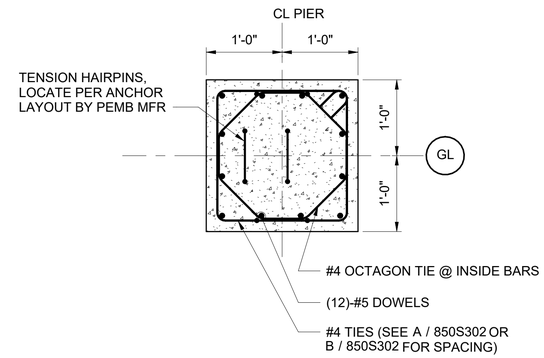

DETAIL C

0 1/2' 1' 2'
SCALE IN FEET

no.	date	by	ckd	description
0	06/26/24	SVW	AMG	ISSUED FOR CONSTRUCTION

GEORGIA REGISTERED No. SE001521 STRUCTURAL ENGINEER ALEX GRIFFIN

Alexander Griffin
Expires 2025.12.31
2024.06.26 11:50:46-05'00'

BURNS McDONNELL
4004 SUMMIT BLVD. NE, SUITE 1200
ATLANTA, GA 30319
770-587-4776
LICENSEE NO. PEF000100
AUTHORIZATION NO. J550903

date	detailed
JANUARY 11, 2024	S. WINGARD
designed	**checked**
S. WINGARD	J. KIENHOLZ

Perry
HOUSTON COUNTY, GEORGIA

EAST PERRY WWTF
SOLIDS HANDLING SECTIONS & DETAILS

project	contract
148538	

drawing **850S302** – rev. **0**

sheet of sheets

file

CALL OUT IDENTIFICATION

SECTION, DETAIL, AND ELEVATION SYMBOL IDENTIFIERS:

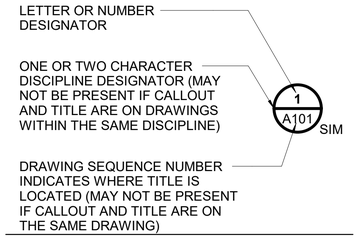

WALL SECTION CALLOUT EXAMPLE:

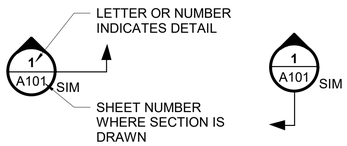

BUILDING SECTION CALLOUT EXAMPLE:

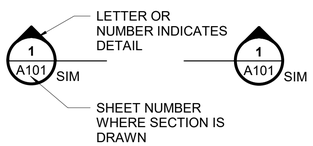

DETAIL CALLOUT EXAMPLE:

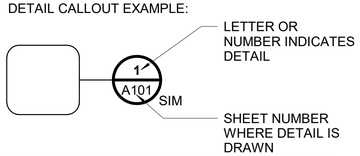

ELEVATION CALLOUT EXAMPLE:

SECTION, DETAIL, AND ELEVATION TITLE EXAMPLE:

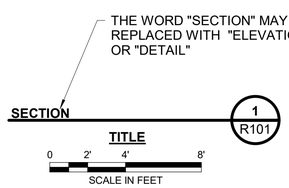

NORTH ARROW EXAMPLE:

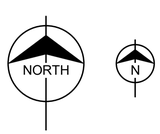

PLAN LEGEND

PLAN LEGEND:

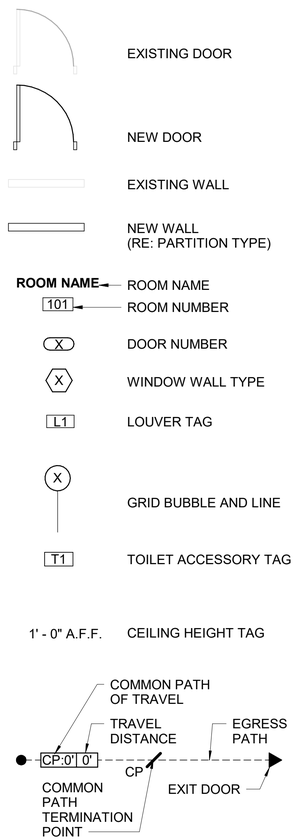

MATERIAL SYMBOLS

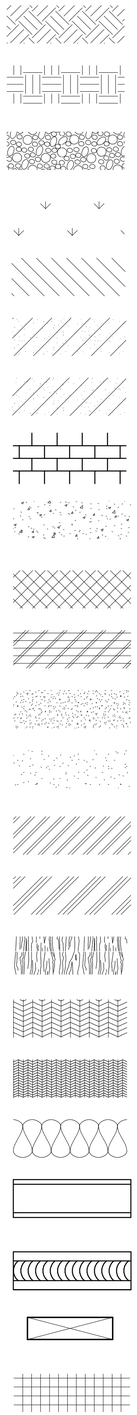

ABBREVIATIONS

-A-
A/E ARCHITECT/ENGINEER
ACOUST ACOUSTICAL
ADJ ADJACENT, ADJUSTABLE
AFF ABOVE FINISH FLOOR
AHJ AUTHORITY HAVING JURISDICTION
ALT ALTERNATE
ALUM ALUMINUM
APPROX APPROXIMATE
ARCH ARCHITECTURE, ARCHITECT

-B-
BD BOARD
BITUM BITUMINOUS
BLDG BUILDING
BLKG BLOCKING
BO BOTTOM OF, AS IN "BO STEEL"
BTWN BETWEEN

-C-
CAB CABINET
CCTV CLOSED CIRCUIT TELEVISION
CID COMPREHENSIVE INTERIOR DESIGN
CJ CONTROL JOINT, CONSTRUCTION JOINT
CL CENTER LINE
CLG CEILING
CLR CLEAR
CMU CONCRETE MASONRY UNIT
CO CLEANOUT
COL COLUMN
COMM COMMUNICATION
CONC CONCRETE
CONSTR CONSTRUCTION
CONT CONTINUOUS
CONTR CONTRACT, CONTRACTOR
COORD COORDINATE
CORR CORRUGATED OR CORRIDOR
CU CUBIC
°C CELSIUS

-D-
DBL DOUBLE
DEMO DEMOLITION
DESCR DESCRIPTION
DET DETAIL
DIA DIAMETER
DIAG DIAGONAL
DIM DIMENSION
DN DOWN
DR DOOR
DS DOWNSPOUT
DWG DRAWING

-E-
E EAST
EA EACH
EEW EMERGENCY EYEWASH
EEWS EMERGENCY EYEWASH & SHOWER
EF EXHAUST FAN
EJ EXPANSION JOINT
EL ELEVATION, AS IN HEIGHT
ELAST ELASTOMERIC
ELEC ELECTRIC / ELECTRICAL
ELEV ELEVATOR, OR ELEVATION AS IN NORTH ELEV
EQ EQUAL
EQUIP EQUIPMENT
ETC AND SO FORTH (ETCETERA)
EW EACH WAY
EWC ELECTRIC WATER COOLER
EXH EXHAUST
EXIST EXISTING
EXP EXPANSION
EXT EXTERIOR

-F-
FD FLOOR DRAIN
FDN FOUNDATION
FE FIRE EXTINGUISHER WITH WALL BRACKET
FEC FIRE EXTINGUISHER CABINET
FF FINISH FLOOR
FF&E FURNITURE, FIXTURES & EQUIPMENT
FHC FIRE HOSE CABINET (WITH EXTINGUISHER & BRACKET)
FHR FIRE HOSE REEL (WITH EXTINGUISHER & BRACKET)
FIN FINISHED, FINISH
FLR FLOOR
FT FEET / FOOT
FV FIELD VERIFY
°F FAHRENHEIT

-G-
GA GAUGE
GALV GALVANIZED
GL GIRT LINE
GRTG GRATING
GYP GYPSUM
GYP BD GYPSUM BOARD

-H-
H HIGH
HD HAND
HDWR HARDWARE
HM HOLLOW METAL
HORIZ HORIZONTAL
HT HEIGHT
HVAC HEATING, VENTILATION & AIR CONDITIONING

-I-
ID INSIDE DIAMETER
IN INCH
INSUL INSULATION
INT INTERIOR

-J-
JAN JANITOR'S CLOSET

-L-
L LEFT, LONG, LENGTH
LAB LABORATORY
LAT LATITUDE
LAV LAVATORY
LB or # POUND
LH LEFT HAND
LONG LONGITUDE
LVR LOUVER

-M-
M METER
MACH MACHINE
MAINT MAINTENANCE
MAS MASONRY
MATL MATERIAL
MAX MAXIMUM
MECH MECHANICAL
MFR MANUFACTURER
MIN MINIMUM
MISC MISCELLANEOUS
MJ MOVEMENT JOINT
MM MILLIMETER
MO MASONRY OPENING
MTD MOUNTED
MTL METAL

-N-
N NORTH
N/A NOT APPLICABLE
NIC NOT IN CONTRACT
NO NUMBER
NOM NOMINAL
NTP NOTICE TO PROCEED
NTS NOT TO SCALE

-O-
OC ON CENTER
OD OUTSIDE DIAMETER
OFF OFFICE
OPNG OPENING
OPP OPPOSITE

-P-
PA PUBLIC ADDRESS
PEMB PRE-ENGINEERED METAL BUILDING
PERIM PERIMETER
PJ PRECAST JOINT
PKG PACKAGE
PL PLATE
PLMB PLUMBING
PLYWD PLYWOOD
PROC PROCESS
PROJ PROJECT
PSF POUNDS PER SQUARE FOOT
PSI POUNDS PER SQUARE INCH
PVC POLYVINYL CHLORIDE

-R-
R RADIUS
R/A RETURN AIR
RCP REFLECTIVE CEILING PLAN
RD ROOF DRAIN
RECP RECEPTACLE
REFER REFERENCE
REINF REINFORCED
REQ'D REQUIRED
REV REVISION
RH RIGHT HAND
RO ROUGH OPENING

-S-
S SOUTH
SA SUPPLY AIR
SCHED SCHEDULE
SECT SECTION
SF SQUARE FOOT
SID STRUCTURAL INTERIOR DESIGN
SIM SIMILAR
SPEC SPECIFICATION
SQ SQUARE, AS IN "SQ FT"
SST STAINLESS STEEL
STC SOUND TRANSMISSION COEFFICIENT
STD STANDARD
STOR STORAGE
STRUCT STRUCTURAL
SUPP SUPPORT
SUSP SUSPENDED
SYS SYSTEM

-T-
TD TRENCH DRAIN
TECH TECHNICAL
THRU THROUGH
TLT TOILET
TO TOP OF, AS IN "TO STEEL"
TOR TOP OF ROOF
TYP TYPICAL

-U-
UL UNDERWRITERS LABORATORY
UNO UNLESS NOTED OTHERWISE
UTIL UTILITY

-V-
VENT VENTILATE, VENTILATOR
VERT VERTICAL
VJ VENEER JOINT
VOL VOLUME

-W-
W WEST, WIDTH
W/ WITH
W/O WITHOUT
WC WATER CLOSET
WD WOOD
WH WATER HEATER
WT WEIGHT

STATE OF GEORGIA
RYAN JACOBS
CERTIFICATE NO. PA017001
REGISTERED ARCHITECT
6/26/2024

no.	date	by	ckd	description
0	6/26/24	RDJ	RPL	ISSUED FOR CONSTRUCTION

BURNS McDONNELL
ARCHITECTS P.C.

date	detailed
APRIL 9, 2024	E. FIELDS
designed	**checked**
R. JACOBS	R. LANG

Perry
HOUSTON COUNTY, GEORGIA

EAST PERRY WWTF
ARCHITECTURAL LEGEND & ABBREVIATIONS

project	contract
148538	

drawing 100A001 — **rev.** 0

sheet **of** **sheets**
file

ARCHITECTURAL GENERAL NOTES

1. WORK SHALL COMPLY WITH AND SUBCONTRACTOR SHALL INCLUDE WORK REQUIRED TO COMPLY WITH APPLICABLE CODES AND STANDARDS OR AS REQUIRED BY THE AUTHORITY HAVING JURISDICTION. APPLICABLE CODES AND STANDARDS OR AS REQUIRED BY THE AUTHORITY HAVING JURISDICTION.
2. DIMENSIONS SHALL GOVERN. DETAILS SHALL GOVERN OVER PLANS AND ELEVATIONS. LARGE SCALE DETAILS OR PLANS SHALL GOVERN OVER SMALL SCALE DETAILS OR PLANS. DO NOT SCALE DRAWINGS.
3. FLOORS SHALL BE INSPECTED FOR DAMAGE, WARPING OR OTHER NOTICEABLE DEVIATIONS AND PATCHED AND LEVELED PRIOR TO COVERING WITH FLOOR FINISHES, INSTALLATION OF ACCESS FLOOR SYSTEM, OR ERECTION AND INSTALLATION OF COLD-FORMED FRAMING.
4. THE GENERAL SUBCONTRACTOR SHALL BE RESPONSIBLE FOR PROVIDING MANUFACTURER'S RECOMMENDED MAINTENANCE PROCEDURES AND SCHEDULES.
5. ANY MANUFACTURER'S OR BRAND NAME PRODUCTS INDICATED OR SPECIFIED ARE DONE SO TO ESTABLISH A MINIMUM LEVEL OF QUALITY.
6. CONSTRUCTION SHALL MEET OR EXCEED LOCAL INDUSTRY STANDARDS. DETAILS ARE PROVIDED TO INDICATE MINIMUM QUALITY AND TO GIVE STANDARDS OF CONSTRUCTION. IF A CONDITION IS NOT SPECIFICALLY DETAILED, SUBMIT A SIMILAR DETAIL FOR GUIDE AND APPROVAL.
7. THE LETTERS I, O, AND Q ARE NOT USED TO INDICATE DETAILS, SECTIONS OR ELEVATIONS.
8. PROVIDE PRESERVATIVE-TREATED WOOD AT LOCATIONS WHERE WOOD IS IN DIRECT CONTACT WITH CONCRETE OR MASONRY.
9. PROVIDE 3/4" FIRE-RETARDANT TREATED PLYWOOD BACKING AT ELECTRICAL, PHONE, AND SECURITY SYSTEM PANELS.
10. PROVIDE FIRE-RESISTANT TREATED WOOD BLOCKING FOR SECURE ANCHORAGE OF SHELVES, RUNNING TRIM, RAILINGS, SUSPENDED ITEMS, DOOR-STOPS, HARDWARE, SPECIALTIES, ACCESSORIES, FIXTURES, OR EQUIPMENT.
11. PAINT, STAIN, OR COAT EXPOSED SURFACES OF CONSTRUCTION UNLESS NOTED OTHERWISE OR IF SURFACES ARE PRE-FINISHED.
12. OPENING DIMENSIONS ARE NOMINAL. THE SUBCONTRACTOR SHALL FIELD MEASURE ALL OPENINGS AND COORDINATE WITH THE APPROPRIATE SUPPLIER FOR ALL DOORS AND WINDOWS.
13. ALL CONDUITS, PLUMBING, PIPING, DUCTWORK, AND OTHER EQUIPMENT EXPOSED TO VIEW SHALL BE LOCATED PARALLEL OR PERPENDICULAR TO THE STRUCTURAL FRAMING SYSTEM.
14. PROVIDE GALVANIC PROTECTION BETWEEN DISSIMILAR MATERIALS, WHERE REQUIRED.
15. ARCHITECTURAL DETAILS ARE APPLICABLE WHERE INDICATED BY SECTION CUT, BY NOTE, OR BY DETAIL TITLE. INCORPORATE SIMILAR DETAILS AT SIMILAR CONDITIONS UNLESS NOTED OTHERWISE. THE SUBCONTRACTOR MAY REQUEST A CLARIFICATION IF REQUIRED, OTHERWISE THE MORE STRINGENT REQUIREMENTS SHALL CONTROL.
16. PROVIDE FIRE-STOPPING SYSTEMS AT TOP OF AND AT PENETRATIONS THROUGH FIRE-RATED PARTITIONS.
17. SEAL ALL EXTERIOR BUILDING JOINTS AT BOTH THE EXTERIOR AND INTERIOR SURFACES AGAINST MOISTURE AND AIR INFILTRATION.
18. SEAL AROUND DOOR AND WINDOW FRAMES, WALL-MOUNTED FIXTURES AND EQUIPMENT TO ADJACENT WALL SURFACES.
19. THE SUBCONTRACTOR SHALL REVIEW THE DIMENSIONS OF EQUIPMENT IN THE PROJECT REGARDLESS OF THE SOURCE AND COORDINATE ACCESS TO THE SPACE AND VERIFY CLEAR FLOOR SPACE IS PROVIDED AS REQUIRED TO ENSURE EASE OF INSTALLATION.
20. WORK MUST BE OF GOOD QUALITY, FREE FROM DEFECTS, AND IN ACCORDANCE WITH THE REQUIREMENTS OF THE CONTRACT DOCUMENTS.
21. THE SUBCONTRACTOR IS RESPONSIBLE FOR THE COORDINATION OF ALL PENETRATIONS IN THE STRUCTURE FOR THE PROPER INSTALLATION OF THE WORK. REFER TO STRUCTURAL DRAWINGS FOR REINFORCING REQUIRED AT PENETRATIONS IN STEEL, CONCRETE OR MASONRY.
22. THE SUBCONTRACTOR SHALL PROVIDE ACCESS DOORS OR PANELS AS REQUIRED FOR SERVICING OF PIPING, DUCTWORK, CABLE TRAYS, FIRE DAMPERS AND SIMILAR APPLICATIONS. ALL PROPOSED ACCESS DOOR LOCATIONS TO BE SUBMITTED FOR APPROVAL PRIOR TO INSTALLATION.
23. PROVIDE HVAC, PLUMBING, GAS AND ELECTRIC SERVICE CONNECTIONS TO FIXTURES, SIGNAGE, OR EQUIPMENT INDICATED (WHETHER UNITS ARE INSTALLED BY SUBCONTRACTOR OR BY OTHERS).
24. BRACE SUSPENDED ITEMS, ETC. ONLY TO STRUCTURAL ELEMENTS ABOVE. DO NOT ANCHOR TO ROOF DECK, PLUMBING / PIPES, DUCTWORK, ELECTRICAL CONDUIT OR SIMILAR ELEMENTS.
25. EXTEND PAINT COMPLETELY INTO RECESSES AND BEHIND EQUIPMENT.
26. MATERIALS USED FOR CONSTRUCTION SHALL BE NEW AND UNDAMAGED. THE SUBCONTRACTOR SHALL SUBMIT SHOP DRAWINGS FOR SHOWN.
27. THE GENERAL CONTRACTOR SHALL BECOME FULLY ACQUAINTED WITH CONDITIONS RELATED TO THE WORK. ANY DISCREPANCIES BETWEEN THE DRAWINGS AND THE ACTUAL CONDITIONS SHALL BE REPORTED TO THE DESIGN PROFESSIONALS FOR RESOLUTION PRIOR TO PROCEEDING WITH THE WORK.
28. DRAWINGS CONTAINED IN THIS SET SHALL NOT BE REPRODUCED FOR SHOP DRAWINGS. COPIES OF THESE DRAWINGS SUBMITTED AS SHOP DRAWINGS WILL BE REJECTED AND RETURNED TO THE SUBCONTRACTOR.
29. EACH INSTALLER MUST EXAMINE SUBSTRATE AND/OR CONDITIONS UNDER WHICH THE WORK WILL BE INSTALLED AND REPORT TO THE GENERAL CONTRACTOR IN WRITING ANY CONDITIONS DETRIMENTAL TO THE PROPER AND TIMELY EXECUTION OF THE INSTALLERS WORK. DO NOT PROCEED UNTIL UNSATISFACTORY CONDITIONS ARE CORRECTED. INSTALLATION SHALL CONSTITUTE ACCEPTANCE OF THE SUBSTRATE AND/OR CONDITIONS.
30. "TYPICAL" (TYP) AS USED IN THESE DOCUMENTS SHALL MEAN THAT THE CONDITIONS OR DIMENSION IS THE SAME OR REPRESENTATIVE FOR SIMILAR CONDITIONS THROUGHOUT.
31. VENEER JOINTS (VJ) SHALL BE INSTALLED AT PARTITIONS. VJ AT CONCRETE MASONRY UNIT PARTITIONS SHALL BE MAXIMUM 20'-0" O.C., UNLESS OTHERWISE NOTED ON DRAWINGS. REFER TO ELEVATION DRAWINGS FOR EXTERIOR VENEER JOINT LOCATIONS. REVIEW VJ LOCATIONS WITH ARCHITECT PRIOR TO INSTALLATION.
32. NON-BEARING PARTITIONS SHALL BE ISOLATED FROM THE BUILDING STRUCTURE TO PREVENT TRANSFER OF BUILDING LOADS FROM THE STRUCTURE TO THE PARTITIONS.
33. THE GENERAL CONTRACTOR SHALL COORDINATE WITH THE SUBCONTRACTOR FOR DESIGNATED CONSTRUCTION STAGING LOCATIONS, STORAGE AREAS, AND CONSTRUCTION SEQUENCING.
34. ARCHITECTURAL FLOOR PLAN DIMENSIONS ARE TO FACE OF CONCRETE, FACE OF MASONRY, FACE OF STUD OR COLUMN LINE, UNO. MASONRY DIMENSIONS ARE NOMINAL, UNO. "CLEAR" DENOTES MINIMUM FINISH-TO-FINISH DIMENSION.

STATE OF GEORGIA
RYAN JACOBS
CERTIFICATE NO. RA017001
REGISTERED ARCHITECT
6/26/2024

no.	date	by	ckd	description
0	6/26/24	RDJ	RPL	ISSUED FOR CONSTRUCTION

BURNS McDONNELL
ARCHITECTS P.C.

date APRIL 9, 2023	detailed E. FIELDS
designed R. JACOBS	checked R. LANG

Perry
HOUSTON COUNTY, GEORGIA

EAST PERRY WWTF
ARCHITECTURAL GENERAL NOTES

project 148538 | contract

drawing **100A002** – rev. **0**

sheet of sheets

file

no.	date	by	ckd	description
0	6/26/24	RDJ	RPL	ISSUED FOR CONSTRUCTION

NOTE: WHERE SLIDING DOORS ARE IN THE FULLY OPEN POSITION, OPERATING HARDWARE SHALL BE EXPOSED AND USABLE FROMB BOTH SIDES.

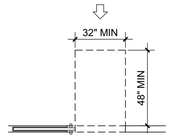

NOTE: X*1= 36" MIN IF Y*1=60" +
X*1=42" MIN IF Y*1= 54" - 59"
Y = 48" IF DOOR HAS LATCH & CLOSER

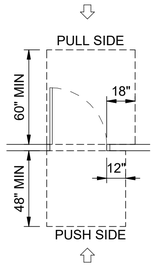

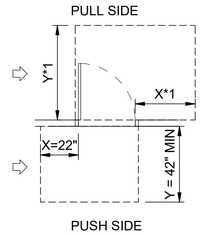

NOTE: Y*1= 54" MIN IF DOOR HAS CLOSER
Y = 48" MIN IF DOOR HAS CLOSER

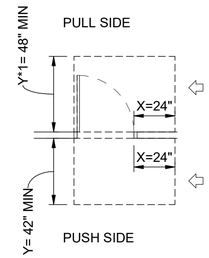

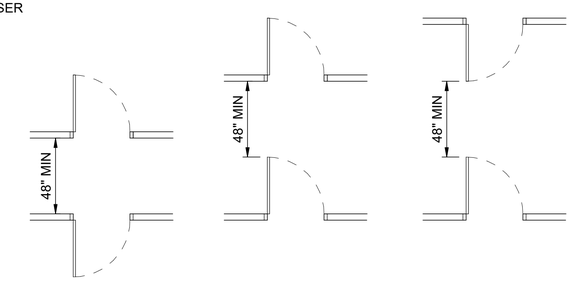

DOOR CLEARANCES

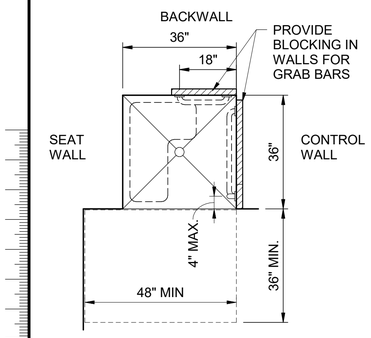

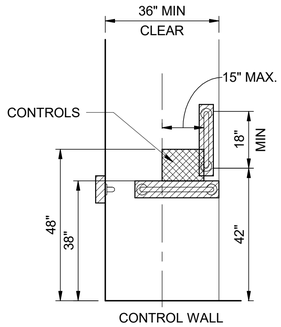

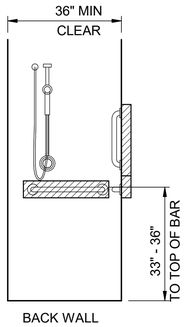

ADA TRANSFER SHOWER

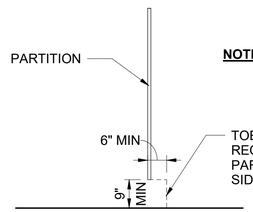

NOTE: 42" MIN LATCH APPROACH ONLY, OTHER APPROACHES 48" MIN

TOE CLEARANCE - REQUIRED AT FRONT PARTITION AND AT LEAST ONE SIDE PARTITION

NOTE: TOE CLEARANCE AT FRONT PARTITION NOT REQUIRED IN COMPARTMENTS GREATER THAN 62" DEEP W/ WALL- HUNG W.C. OR 65" DEEP W/ FLOOR-MOUNTED W.C.. TOE CLEARANCE AT SIDE PARTITION NOT REQUIRED IN COMPARTMENTS GREATER THAN 66" WIDE.

FLUSH CONTROLS FOR ACCESSIBLE WATER CLOSETS SHALL BE MOUNTED ON WIDE SIDE OF TOILET AREAS NO MORE THAN 44 INCHES ABOVE THE FLOOR.

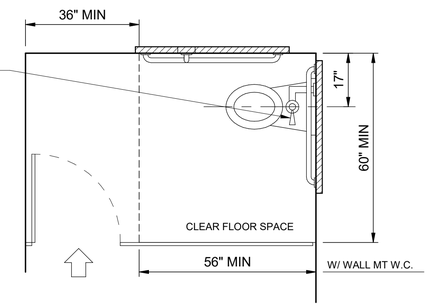

ADA TOILET STALL PLAN

OPERABLE PARTS ABOVE SINK SHALL NOT BE GREATER THAN 44" IN HEIGHT ABOVE FINISH FLOOR.

HOT WATER AND DRAIN PIPES UNDER LAVATORIES SHALL BE INSULATED OR OTHERWISE CONFIGURED TO PROTECT AGAINST CONTACT.

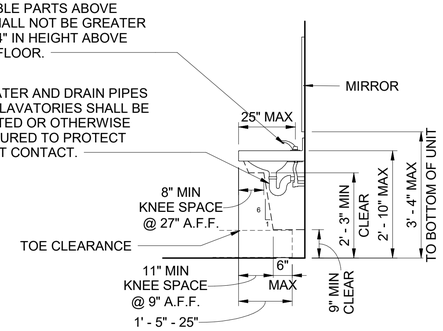

ADA LAVATORY ELEVATION

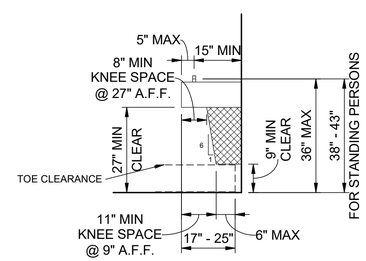

NOTE: EQUIPMENT PERMITTED IN SHADED AREA, ADAAG 303.6.4

NOTE: ANY PROTRUSION HIGHER THAN 27" ABOVE FINISH FLOOR SHALL NOT PROJECT INTO A CORRIDOR OR PATH MORE THAN 4"

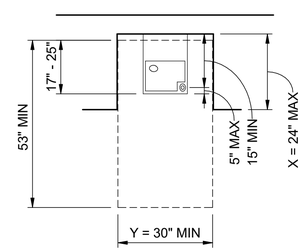

NOTE: IF X > 24" THEN Y SHALL BE 36" MIN.

DRINKING FOUNTAIN

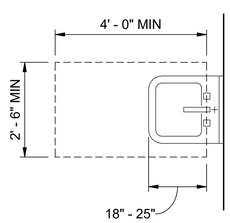

ADA LAVATORY PLAN

NOTE: HATCHED AREA INDICATES CONCEALED BLOCKING; TYP.

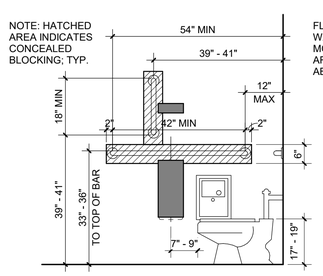

FLUSH CONTROLS FOR ACCESSIBLE WATER CLOSETS SHALL BE MOUNTED ON WIDE SIDE OF TOILETS AREAS NO MORE THAN 44 INCHES ABOVE THE FLOOR.

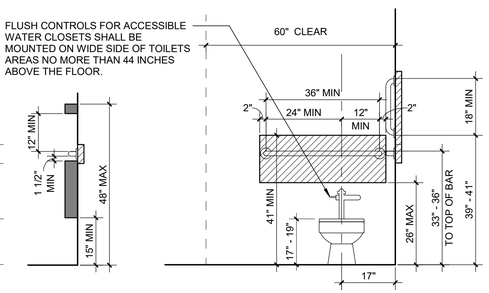

ADA TOILET ELEVATION

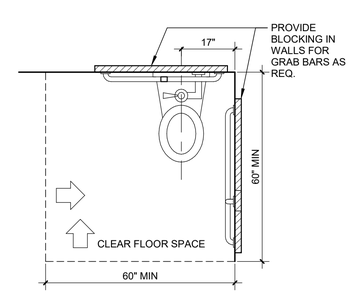

ADA TOILET PLAN

STATE OF GEORGIA
RYAN JACOBS
CERTIFICATE NO. PA017001
REGISTERED ARCHITECT
6/26/2024

BURNS McDONNELL
ARCHITECTS P.C.

date	detailed
APRIL 9, 2024	E. FIELDS
designed	**checked**
R. JACOBS	R. LANG

Perry
HOUSTON COUNTY, GEORGIA

EAST PERRY WWTF
ARCHITECTURAL STANDARD DETAILS
SHEET 1

project	contract
148538	

drawing **100A003** – rev. **0**
sheet of sheets
file

Scale For Microfilming: Millimeters / Inches

no.	date	by	ckd	description
0	6/26/24	RDJ	RPL	ISSUED FOR CONSTRUCTION

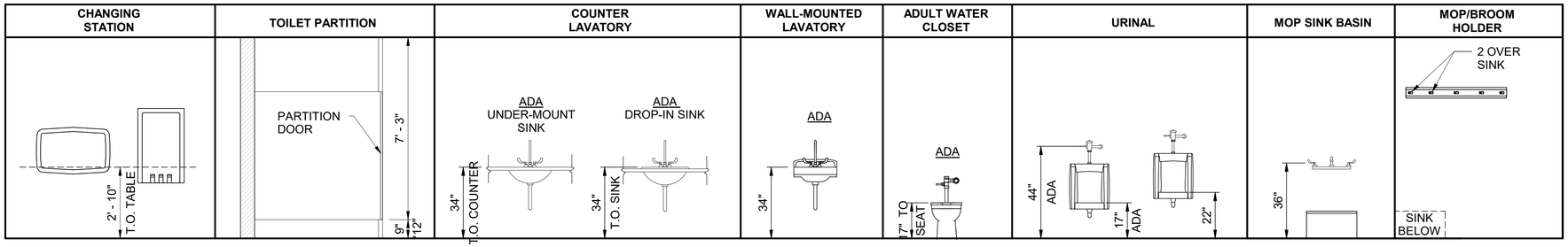

TOILET PARTITION NOTE:
24" WIDE REGULAR STALL DOORS
32" WIDE MIN. ADA STALL DOORS

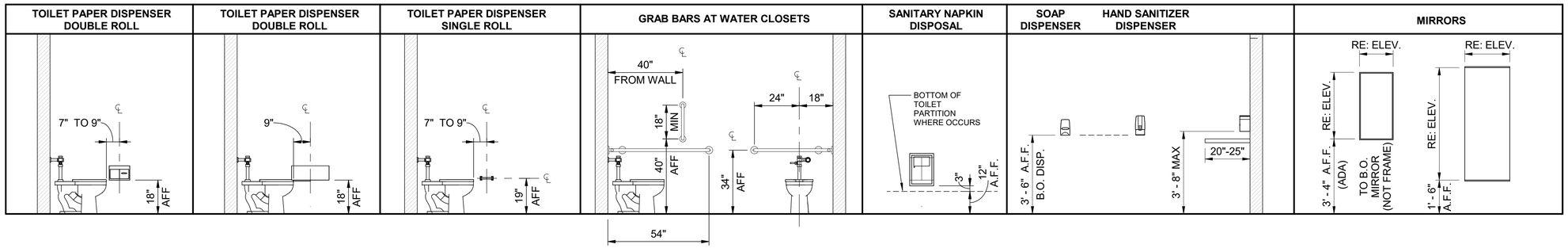

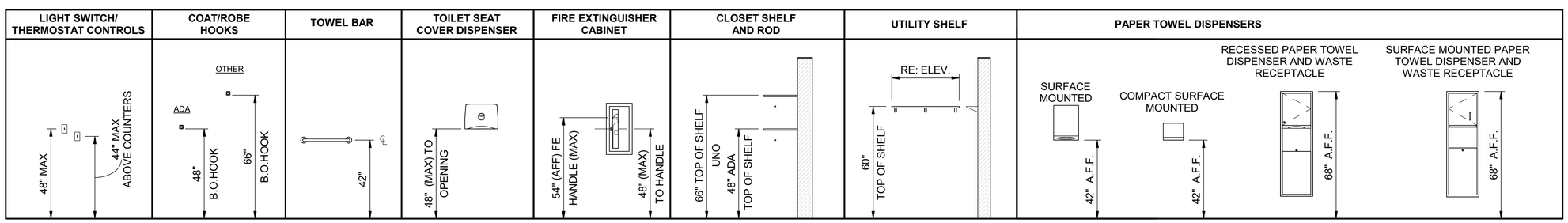

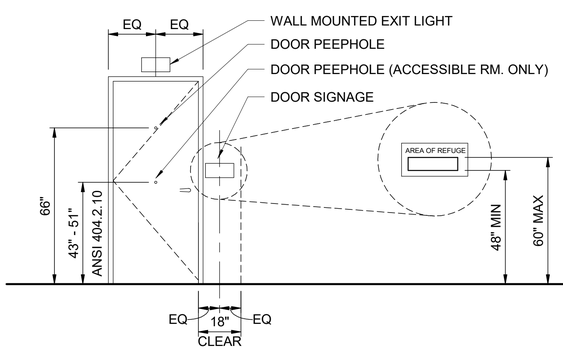

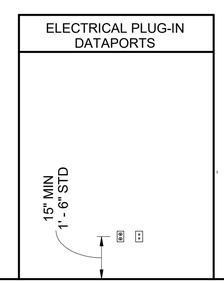

STATE OF GEORGIA
RYAN JACOBS
CERTIFICATE NO. PA017005
REGISTERED ARCHITECT
6/26/2024

BURNS McDONNELL
ARCHITECTS P.C.

date APRIL 9, 2024	detailed E. FIELDS
designed R. JACOBS	checked R. LANG

Perry
HOUSTON COUNTY, GEORGIA

EAST PERRY WWTF
ARCHITECTURAL STANDARD DETAILS
SHEET 2

project 148538	contract
drawing 100A004	rev. 0
sheet	of sheets
file	

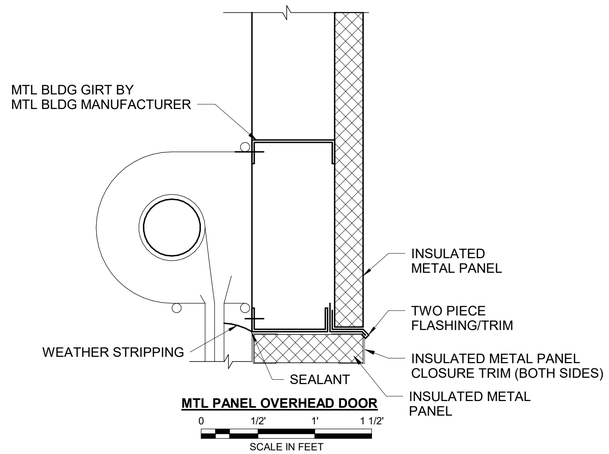

MTL PANEL OVERHEAD DOOR

0 1/2' 1' 1 1/2'
SCALE IN FEET

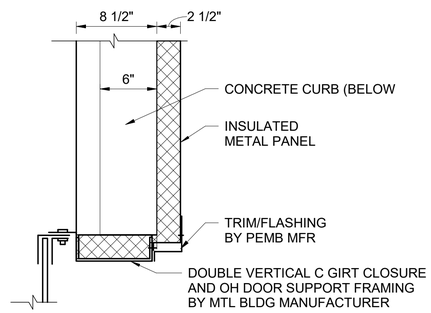

MTL PANEL OVERHEAD JAMB

0 1/2' 1' 1 1/2'
SCALE IN FEET

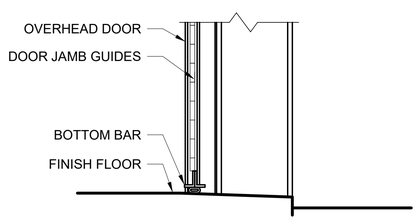

OVERHEAD DOOR SILL

0 1/2' 1' 1 1/2'
SCALE IN FEET

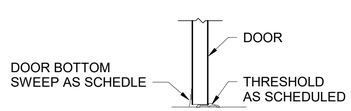

DOOR SILL

0 1/2' 1' 1 1/2'
SCALE IN FEET

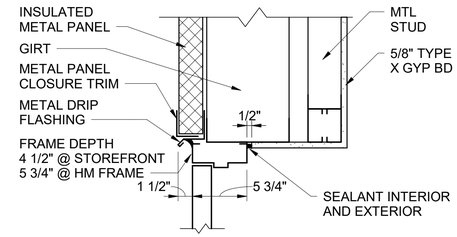

MTL DOOR HEAD 1

0 1/2' 1' 1 1/2'
SCALE IN FEET

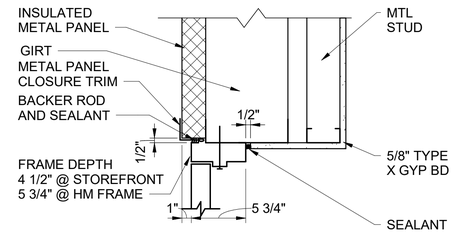

MTL DOOR JAMB 1

0 1/2' 1' 1 1/2'
SCALE IN FEET

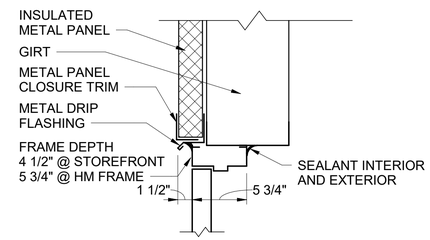

MTL DOOR HEAD 2

0 1/2' 1' 1 1/2'
SCALE IN FEET

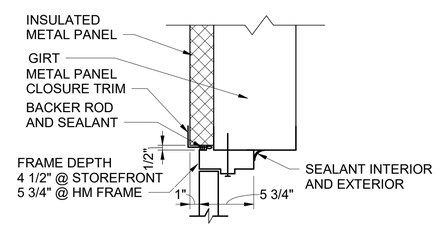

MTL DOOR JAMB 2

0 1/2' 1' 1 1/2'
SCALE IN FEET

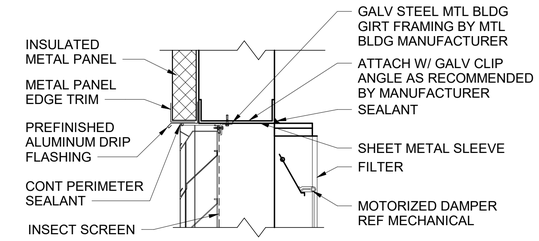

HEAD

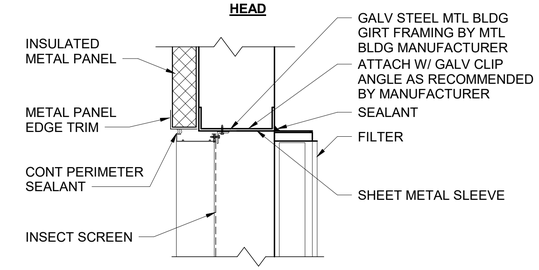

JAMB

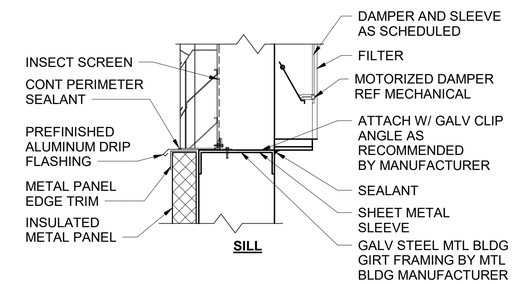

SILL

LOUVER 1

0 1/2' 1' 1 1/2'
SCALE IN FEET

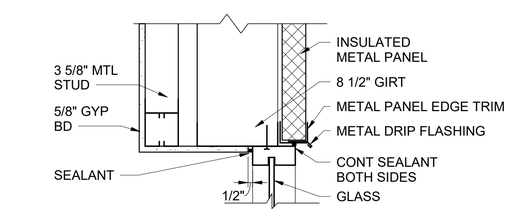

HEAD

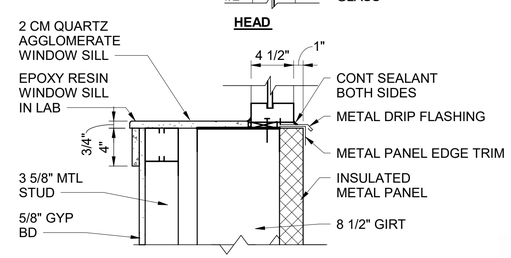

SILL

WINDOW HEAD AND SILL 1 (JAMB SIM)

0 1/2' 1' 1 1/2'
SCALE IN FEET

STATE OF GEORGIA
RYAN JACOBS
CERTIFICATE NO. RA017001
REGISTERED ARCHITECT
6/26/2024

no.	date	by	ckd	description
0	6/26/24	RDJ	RPL	ISSUED FOR CONSTRUCTION

BURNS McDONNELL
ARCHITECTS P.C.

date APRIL 9, 2024	detailed E. FIELDS
designed R. JACOBS	checked R. LANG

Perry
HOUSTON COUNTY, GEORGIA

EAST PERRY WWTF
ARCHITECTURAL STANDARD DETAILS
SHEET 3

project 148538	contract
drawing 100A005	rev. 0
sheet	of sheets
file	

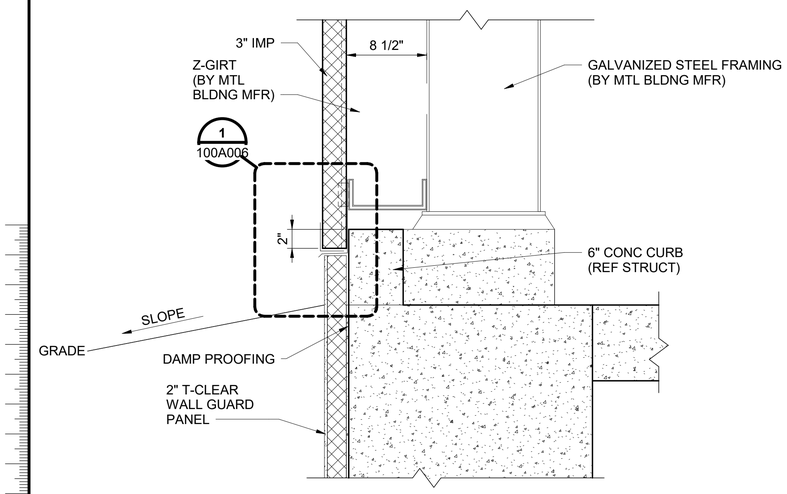

BASE OF WALL

0 1/2' 1' 1 1/2'
SCALE IN FEET

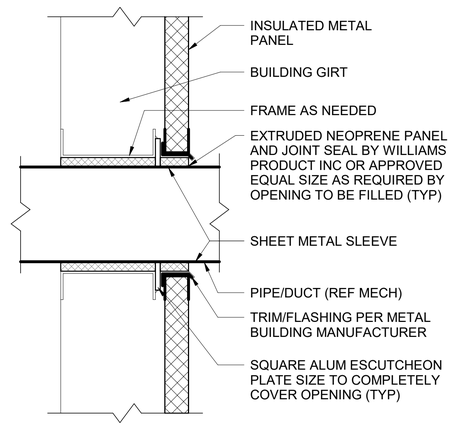

THRU MTL PANEL TYPICAL PENETRATION DETAIL

0 1/2' 1' 1 1/2'
SCALE IN FEET

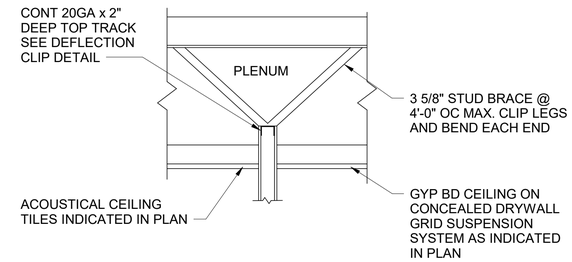

INTERIOR WALL BRACING DETAIL

0 1/2' 1' 1 1/2'
SCALE IN FEET

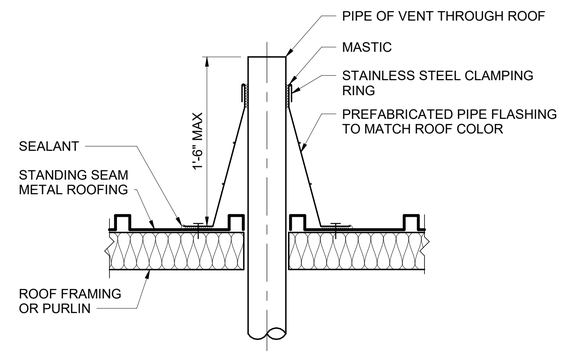

ROOF VTR FLASHING AT MTL

0 1/2' 1' 1 1/2'
SCALE IN FEET

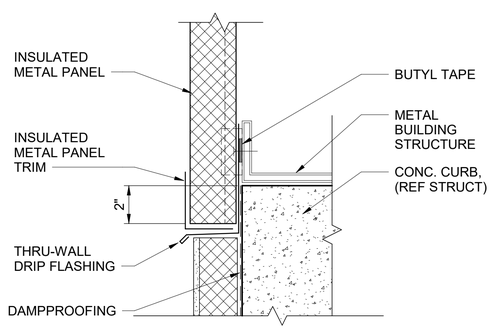

DETAIL 1 / 100A006

ENLARGED BASE OF WALL

0 3" 6" 9"
SCALE IN FEET

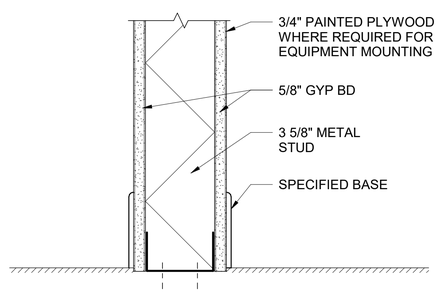

INTERIOR PARTITION DETAILS

0 3" 6" 9"
SCALE IN FEET

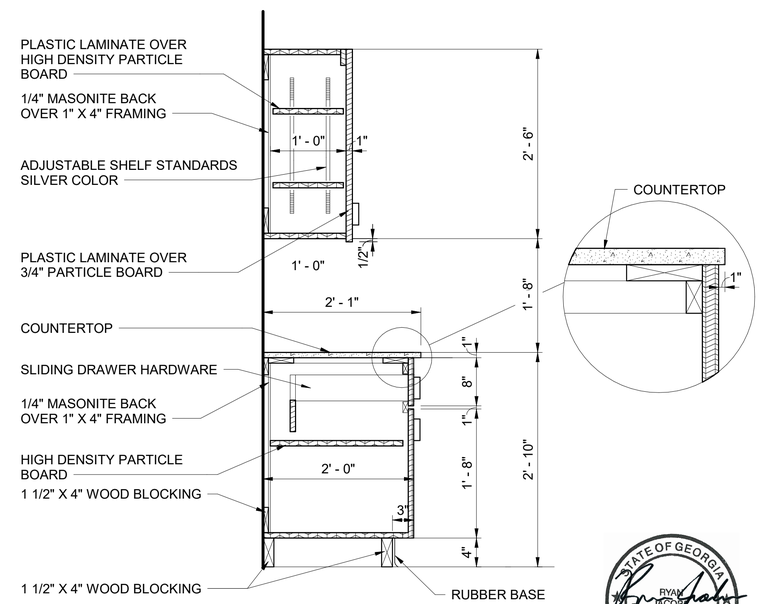

TYPICAL MILLWORK

0 1/2' 1' 2'
SCALE IN FEET

STATE OF GEORGIA
RYAN JACOBS
CERTIFICATE NO. RA017097
REGISTERED ARCHITECT
6/26/2024

no.	date	by	ckd	description
0	6/26/24	RDJ	RPL	ISSUED FOR CONSTRUCTION

BURNS McDONNELL
ARCHITECTS P.C.

date	detailed
APRIL 9, 2024	E. FIELDS
designed	**checked**
R. JACOBS	R. LANG

Perry
HOUSTON COUNTY, GEORGIA

EAST PERRY WWTF
ARCHITECTURAL STANDARD DETAILS
SHEET 4

project	contract
148538	

drawing 100A006 — **rev.** 0

sheet **of** **sheets**

file

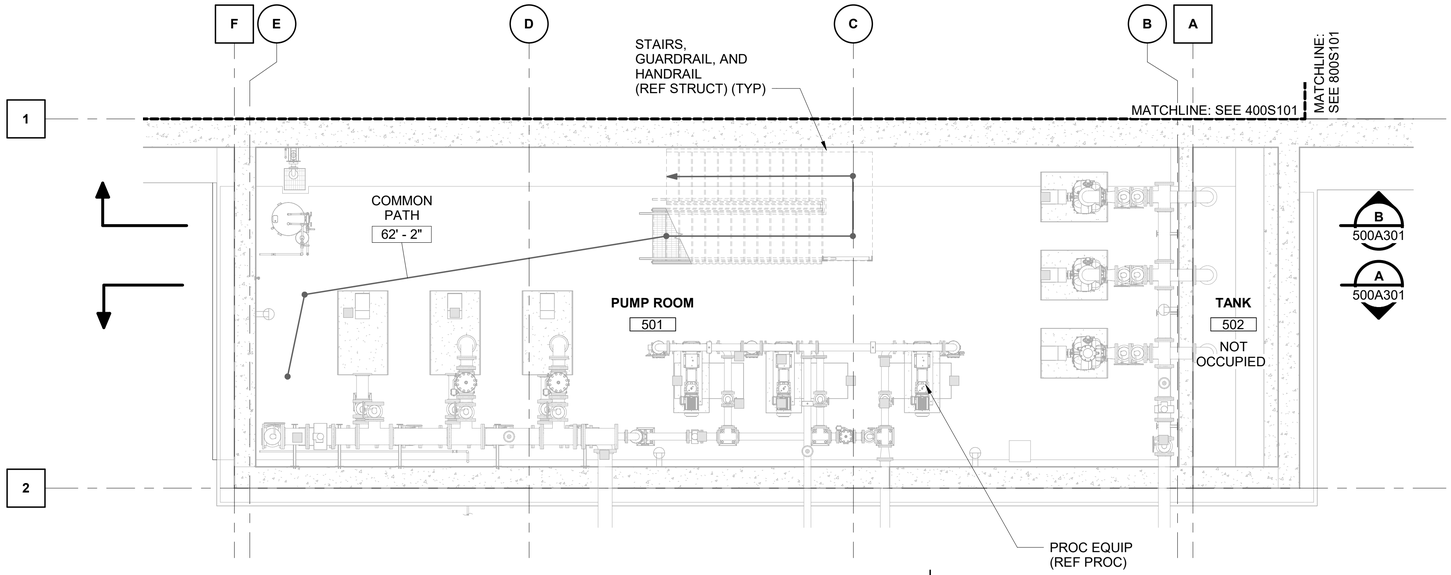

OVERALL LOWER FLOOR PLAN

0 4' 8' 12'
SCALE IN FEET

NORTH

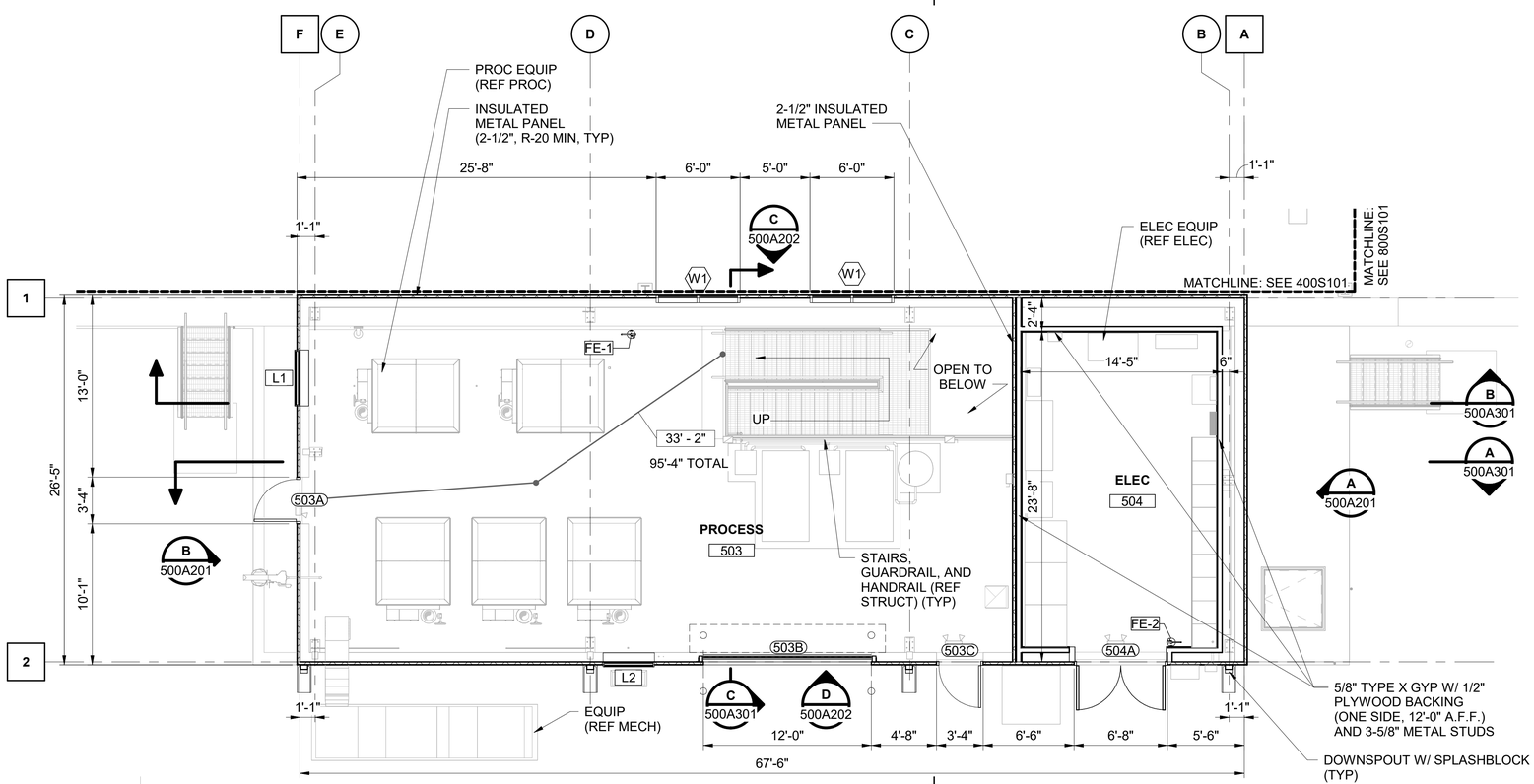

OVERALL UPPER FLOOR PLAN

0 4' 8' 12'
SCALE IN FEET

NORTH

BUILDING CODE INFORMATION
APPLICABLE CODE (HOUSTON COUNTY CLIMATE ZONE 3A):
INTERNATIONAL BUILDING CODE, 2018 EDITION
INTERNATIONAL FIRE CODE, 2018 EDITION
INTERNATIONAL MECHANICAL CODE, 2018 EDITION
INTERNATIONAL PLUMBING CODE, 2018 EDITION
NATIONAL ELECTRIC CODE, 2017 EDITION
INTERNATIONAL FUEL GAS CODE, 2018 EDITION

OCCUPANCY TYPE: (SECTION 306):
F-1, MODERATE HAZARD FACTORY INDUSTRIAL

CONSTRUCTION TYPE (TABLE 601): IIB (NON COMBUSTIBLE MATERIALS)
ALLOWABLE HEIGHT AND AREA: (TABLE 503):
BUILDING TOTAL:
BASEMENT: 1463 SQ. FT.
FIRST FLOOR: 1755 SQ. FT.
TOTAL: 3218 SQ. FT.

1 STORY, 44'-0" FEET
ALLOWABLE BUILDING AREA 15,000 SQ. FT. (F-1 OCCUPANCY)
ALLOWABLE BUILDING HEIGHT: 2 STORIES, 55 FEET

OCCUPANT LOAD AND REQUIRED EGRESS WIDTH (TABLE 1004.1.2 -1005.3 SECTION 1015.1):
GROUP F-1: 3218 SQ. FT./100 SQ. FT. PER PERSON = 33 OCCUPANTS
33 TOTAL OCCUPANTS X .2 INCHES PER OCCUPANTS = 6.6 INCHES OF EGRESS WIDTH REQUIRED
1 EXIT REQUIRED, 2 EXITS PROVIDED, FOR A TOTAL OF 64 INCHES OF EGRESS WIDTH

TRAVEL DISTANCE (TABLE 1017.2):
F-1 OCCUPANCY (WITHOUT SPRINKLER SYSTEM; TWO EXITS) -200 FEET TRAVEL DISTANCE PERMITTED
ACTUAL TRAVEL DISTANCE: 95' - 4"

TABLE 1006.3.3(2) STORIES WITH ONE EXIT OR ACCESS TO ONE EXIT FOR OTHER OCCUPANCIES:
FIRST STORY ABOVE OR BELOW GRADE (F-OCCUPANCY), 75'-0"
COMMON PATH ALLOWED, 62'-2" ACTUAL.

R-VALUES:
WALLS -R-19.5ci MIN
ROOF -R-25ci MIN
FOUNDATION: NOT REQUIRED

FIRE PROTECTION AND LIFE SAFETY SYSTEMS:

AN AUTOMATIC SPRINKLER SYSTEM IS NOT PROVIDED, AND IS NOT REQUIRED ACCORDING TO SECTION 903.2.4, GROUP F-1.

AN AUTOMATIC SPRINKLER SYSTEM IS NOT PROVIDED, AND IS NOT REQUIRED IN THE BASEMENT LEVEL ACCORDING TO SECTION 903.2.11.1, STORIES WITHOUT OPENINGS. THE BASEMENT AREA DOES NOT EXCEED 1500 SF.(ACTUAL 1463 SF.).

FIRE EXTINGUISHER LEGEND:
FE-1: MULTI-PURPOSE DRY CHEMICAL TYPE EXTINGUISHER. UL OR FM RATED
2-A:10:B:C, 10LB NOMINAL CAPACITY IN ENAMEL-STEEL CONTAINER
INSTALL W/ TOP OF EXTINGUISHER @ 5'-0" AFF

FE-2: CLEAN AGENT TYPE EXTINGUISHER UL RATING 5-B:C, 10LB NOMINAL CAPACITY IN ALUMINUM CONTAINER

no.	date	by	ckd	description
0	6/26/24	RDJ	RPL	ISSUED FOR CONSTRUCTION

BURNS McDONNELL
ARCHITECTS P.C.

date	detailed
MARCH 27, 2023	B. MADDOX
designed	**checked**
R. JACOBS	R. LANG

Perry
HOUSTON COUNTY, GEORGIA

EAST PERRY WWTF
PROCESS BUILDING A
FLOOR PLANS

STATE OF GEORGIA
RYAN JACOBS
CERTIFICATE NO. RA017037
REGISTERED ARCHITECT
6/26/2024

project	contract
148538	

drawing	rev.
500A101	0

sheet of sheets
file

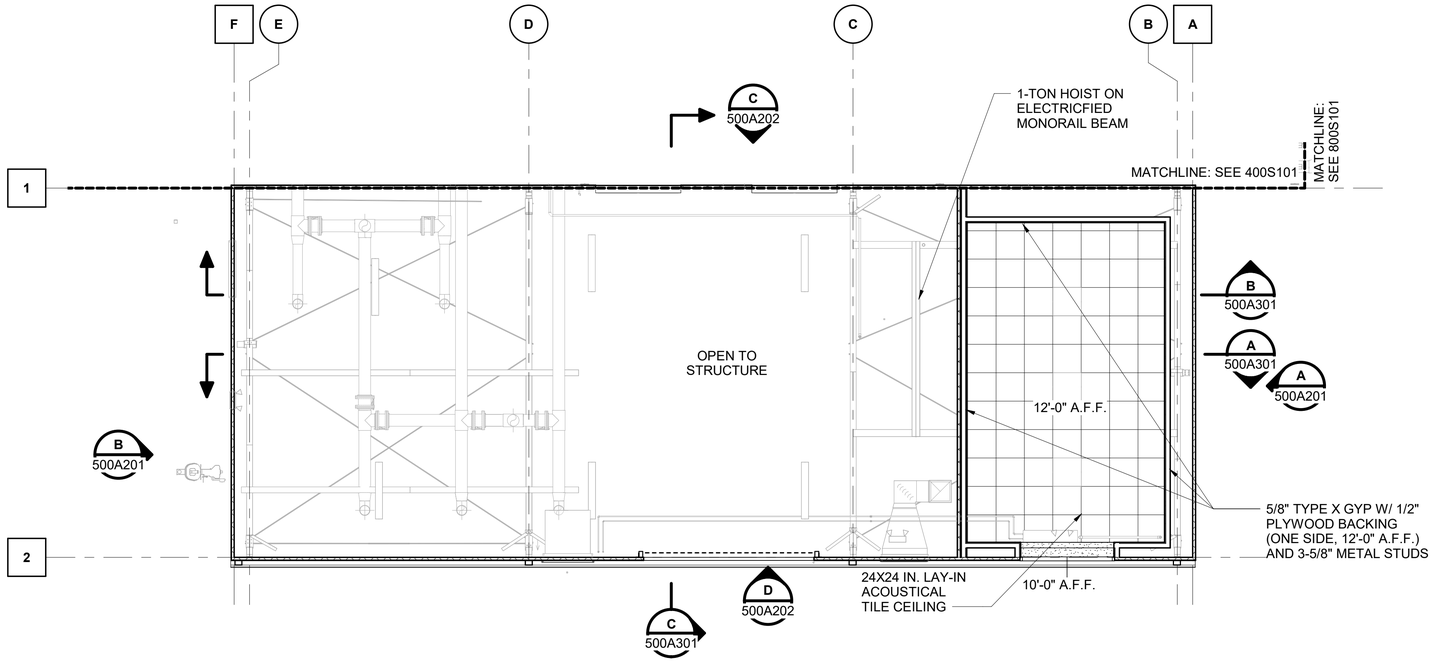

REFLECTED CEILING PLAN

0 4' 8' 12'
SCALE IN FEET

NORTH

CEILING LEGEND:

2' x 2' ACOUSTICAL CEILING TILE

GYB. BD. CEILING

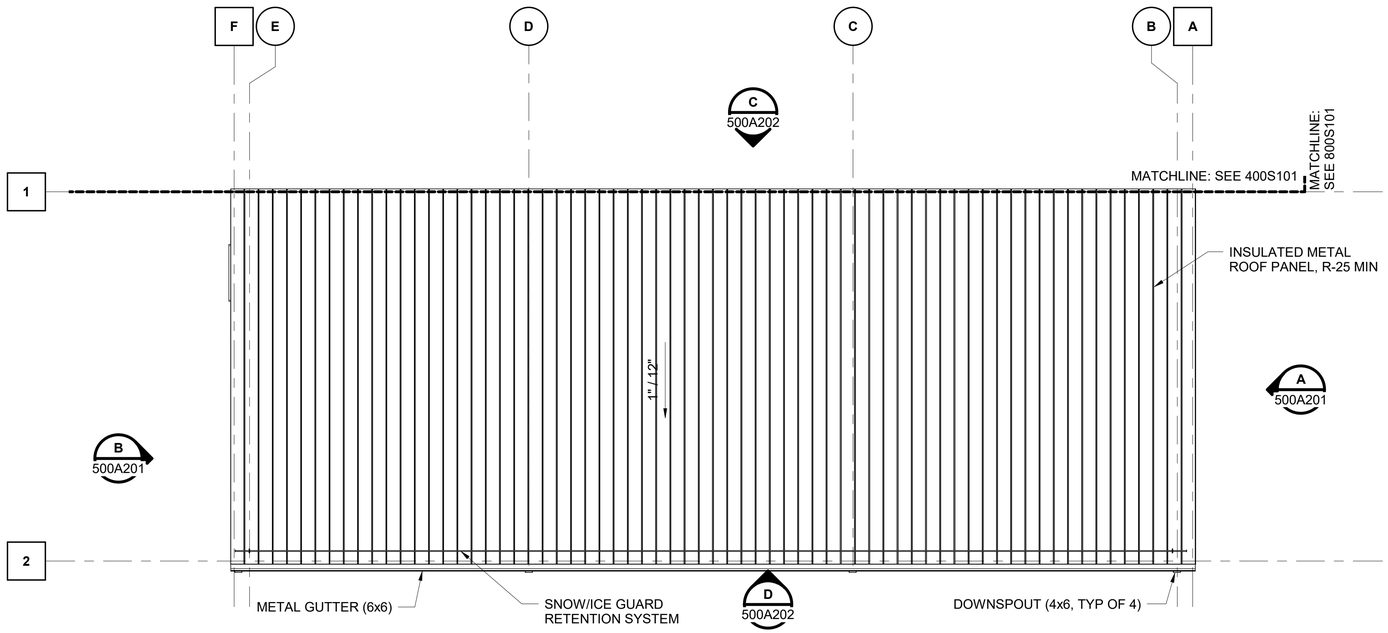

ROOF PLAN

0 4' 8' 12'
SCALE IN FEET

NORTH

no.	date	by	ckd	description
0	6/26/24	RDJ	RPL	ISSUED FOR CONSTRUCTION

BURNS McDONNELL
ARCHITECTS P.C.

date APRIL 4, 2023	detailed B. MADDOX
designed R. JACOBS	checked R. LANG

Perry

HOUSTON COUNTY, GEORGIA

EAST PERRY WWTF
PROCESS BUILDING A
ROOF PLAN

STATE OF GEORGIA
RYAN JACOBS
CERTIFICATE NO. PA017001
REGISTERED ARCHITECT
6/26/2024

project 148538	contract
drawing 500A102	rev. 0
sheet	of sheets
file	

Scale For Microfilming
Millimeters
Inches

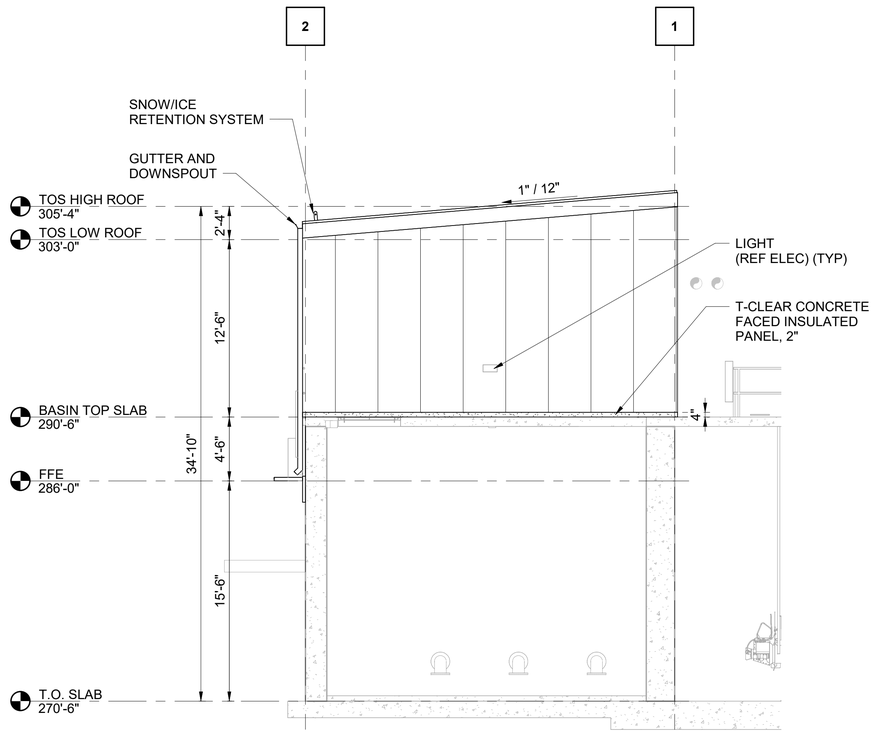

ELEVATION A 500A101
EAST
0 4' 8' 12'
SCALE IN FEET

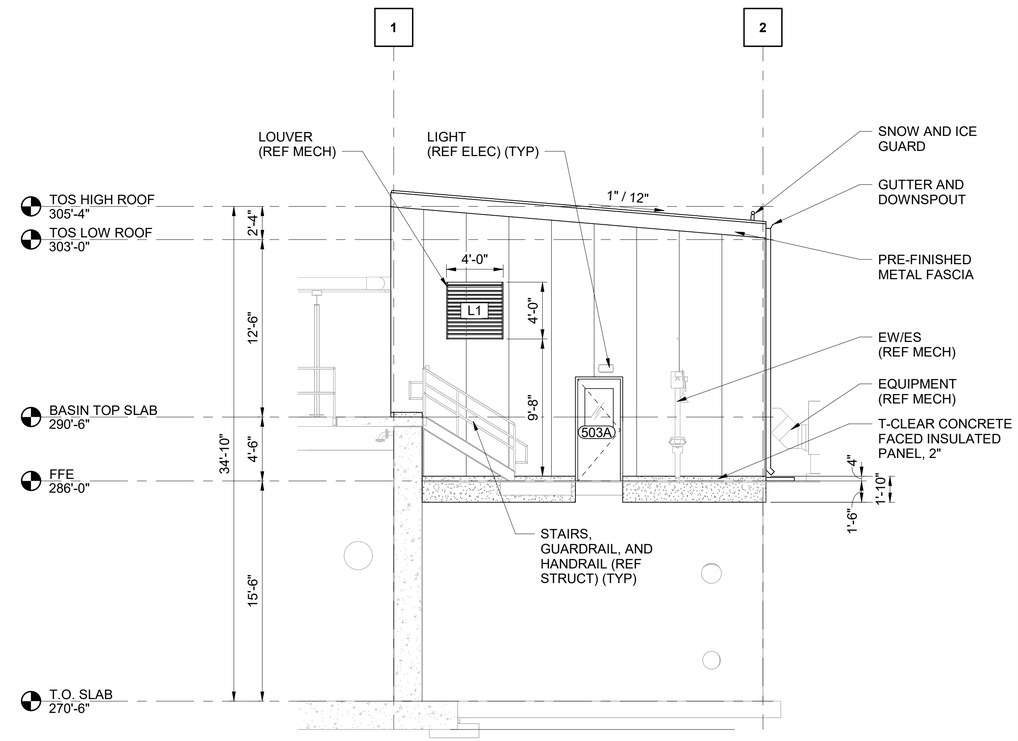

ELEVATION B 500A101
WEST
0 4' 8' 12'
SCALE IN FEET

no.	date	by	ckd	description
0	6/26/24	RDJ	RPL	ISSUED FOR CONSTRUCTION

BURNS McDONNELL
ARCHITECTS P.C.

date	detailed
MARCH 27, 2023	B. MADDOX
designed	**checked**
R. JACOBS	R. LANG

Perry
HOUSTON COUNTY, GEORGIA

EAST PERRY WWTF
PROCESS BUILDING A
EAST AND WEST ELEVATIONS

project	contract
148538	

drawing **500A201** – rev. **0**
sheet of sheets
file

STATE OF GEORGIA
RYAN JACOBS
CERTIFICATE NO. PA017707
REGISTERED ARCHITECT
6/26/2024

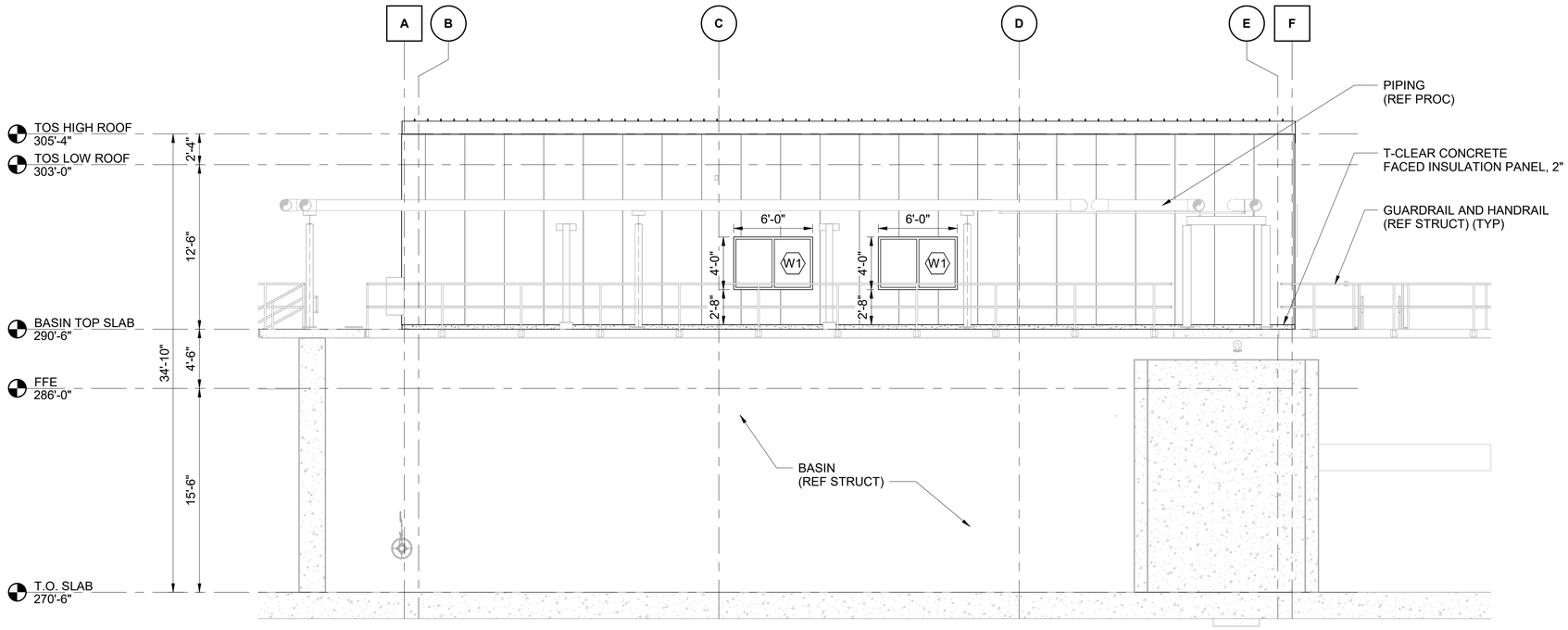

ELEVATION C 500A101
NORTH
0 4' 8' 12'
SCALE IN FEET

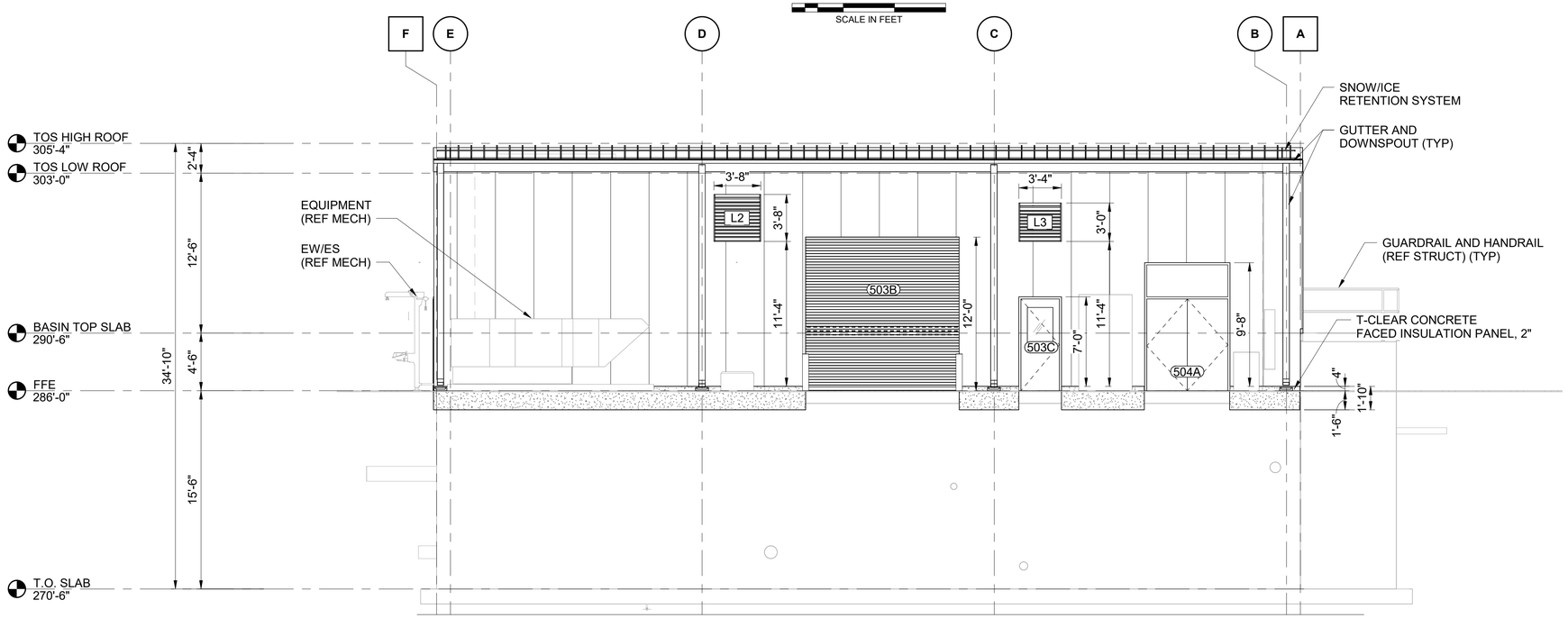

ELEVATION D 500A101
SOUTH
0 4' 8' 12'
SCALE IN FEET

STATE OF GEORGIA
RYAN JACOBS
CERTIFICATE NO. PA017707
REGISTERED ARCHITECT
6/26/2024

no.	date	by	ckd	description
0	6/26/24	RDJ	RPL	ISSUED FOR CONSTRUCTION

BURNS McDONNELL
ARCHITECTS P.C.

date	detailed
MARCH 27, 2023	B. MADDOX
designed	**checked**
R. JACOBS	R. LANG

Perry
HOUSTON COUNTY, GEORGIA

EAST PERRY WWTF
PROCESS BUILDING A
NORTH AND SOUTH ELEVATION

project	contract
148538	

drawing **500A202** – rev. **0**
sheet of sheets
file

Scale For Microfilming
Millimeters
Inches

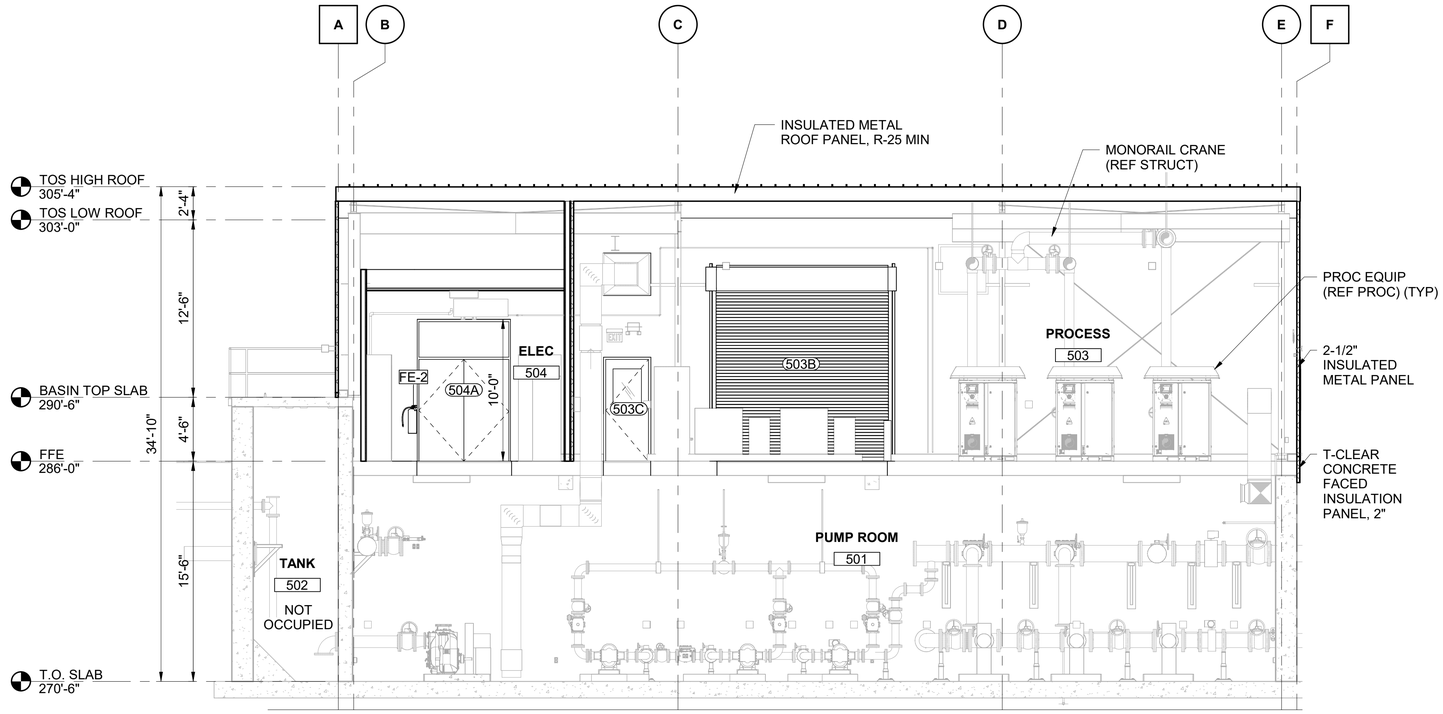

SECTION A 500A101

0 4' 8' 12'
SCALE IN FEET

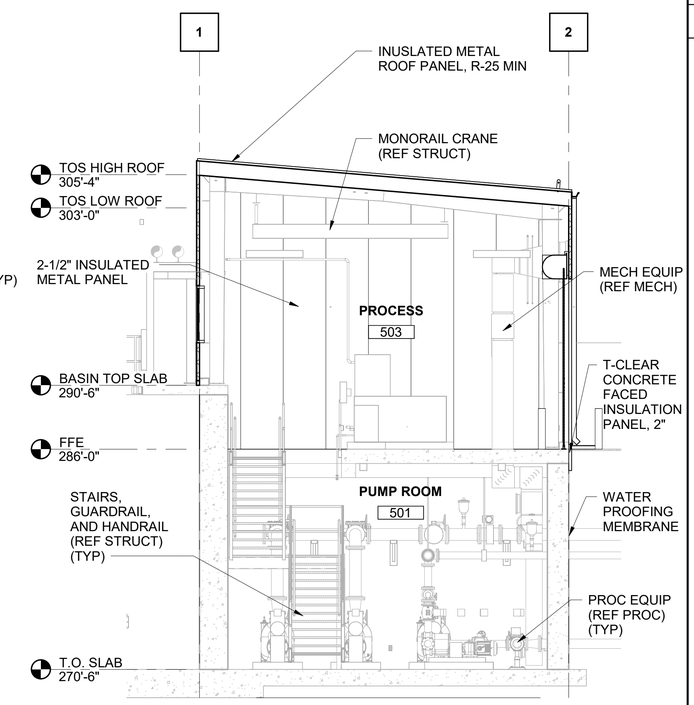

SECTION C 500A101

0 4' 8' 12'
SCALE IN FEET

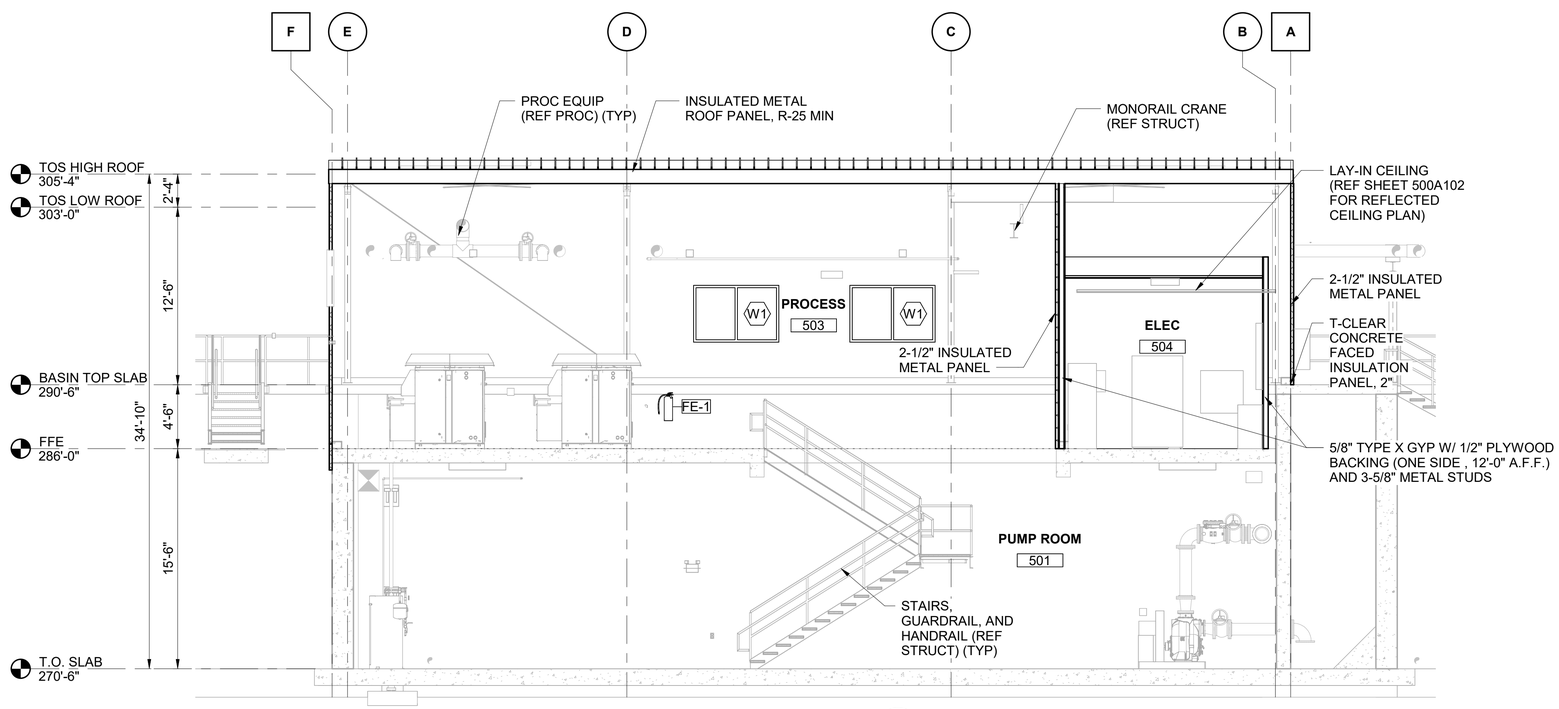

SECTION B 500A101

0 4' 8' 12'
SCALE IN FEET

STATE OF GEORGIA
RYAN JACOBS
CERTIFICATE NO. PA017097
REGISTERED ARCHITECT
6/26/2024

no.	date	by	ckd	description
0	6/26/24	RDJ	RPL	ISSUED FOR CONSTRUCTION

BURNS McDONNELL
ARCHITECTS P.C.

date	detailed
MARCH 27, 2023	B. MADDOX
designed	**checked**
R. JACOBS	R. LANG

Perry
HOUSTON COUNTY, GEORGIA

EAST PERRY WWTF
PROCESS BUILDING A
SECTION

project	contract
148538	

drawing **500A301** – rev. **0**

sheet of sheets

file

Scale For Microfilming
Millimeters
Inches

DOOR SCHEDULE

DOOR NUMBER	DOOR SIZE PAIR	DOOR SIZE WIDTH	DOOR SIZE HEIGHT	TYPE	MATERIAL	FINISH	FRAME TYPE	FRAME MATERIAL	FRAME FINISH	DETAIL HEAD	DETAIL JAMB	DETAIL SILL	HARDWARE SET	REMARKS
503A		3'-0"	7'-2"	HG	HM	PT	F1	HM	PT	2	2	1	01	INSULATED
503B		12'-0"	12'-0"	OHC	STL	PF	N/A	N/A	PF	-	-	-		INSULATED
503C		3'-0"	7'-2"	HG	HM	PT	F1	HM	PT	2	2	1	01	INSULATED
504A	Y	3'-2"	7'-2"	F	HM	PT	F2	HM	PT	1	1	1	02	REMOVABLE TRANSOM, INSUALTED

DOOR SCHEDULE REMARKS:
1. REFERENCE DETAILS ON SHEET 100/A005

LOUVER SCHEDULE

QUANTITY	TYPE	SIZE WIDTH	SIZE HEIGHT	HEAD HEIGHT	SILL HEIGHT	DETAILS HEAD	DETAILS JAMB	DETAILS SILL	REMARKS	REVISION
1	L1	4'-0"	4'-0"	14'-0"	10'-0"	1	1	1		
1	L2	3'-8"	3'-8"	15'-4"	11'-8"	1	1	1		
1	L3	3'-4"	3'-0"	14'-8"	11'-8"	1	1	1		

LOUVER SCHEDULE REMARKS:
1. REFERENCE DETAILS ON SHEET 100/A005

ROOM FINISH SCHEDULE

ROOM NUMBER	ROOM NAME	FLOOR	BASE MATERIAL	NORTH WALL	EAST WALL	SOUTH WALL	WEST WALL	CEILING	REMARKS
501	PUMP ROOM	10	20	30	30	30	30	40	
502	TANK	N/A	N/A	N/A	N/A	N/A	N/A	N/A	
503	PROCESS	10	20	30	30	30	30	40	
504	ELEC	10	21	31	31	31	31	41	

ROOM FINISH SCHEDULE REMARKS:
1. REFERENCE DETAILS ON SHEET 100/A006

ROOM FINISH SCHEDULE REMARKS:

FLOOR
10 - SEALED CONCRETE

BASE
20 - NO BASE
21 - RUBBER BASE

WALLS
30 - NO FINISH (EXPOSED METAL PANEL OR CONCRETE)
31 - PAINTED GYP

CEILING
40 - NO FINISH (OPEN TO STRUCTURE)
41 - 24" X 24" LAY-IN CEILING TILE

WINDOW SCHEDULE

QUANTITY	TYPE	SIZE WIDTH	SIZE HEIGHT	HEAD HEIGHT	SILL HEIGHT	DETAIL HEAD	DETAIL JAMB	DETAIL SILL	REMARKS
2	W1	6'-0"	4'-0"	7'-0"	3'-0"	1	1	1	

WINDOW SCHEDULE REMARKS:
1. REFERENCE DETAILS ON SHEET 100/A005

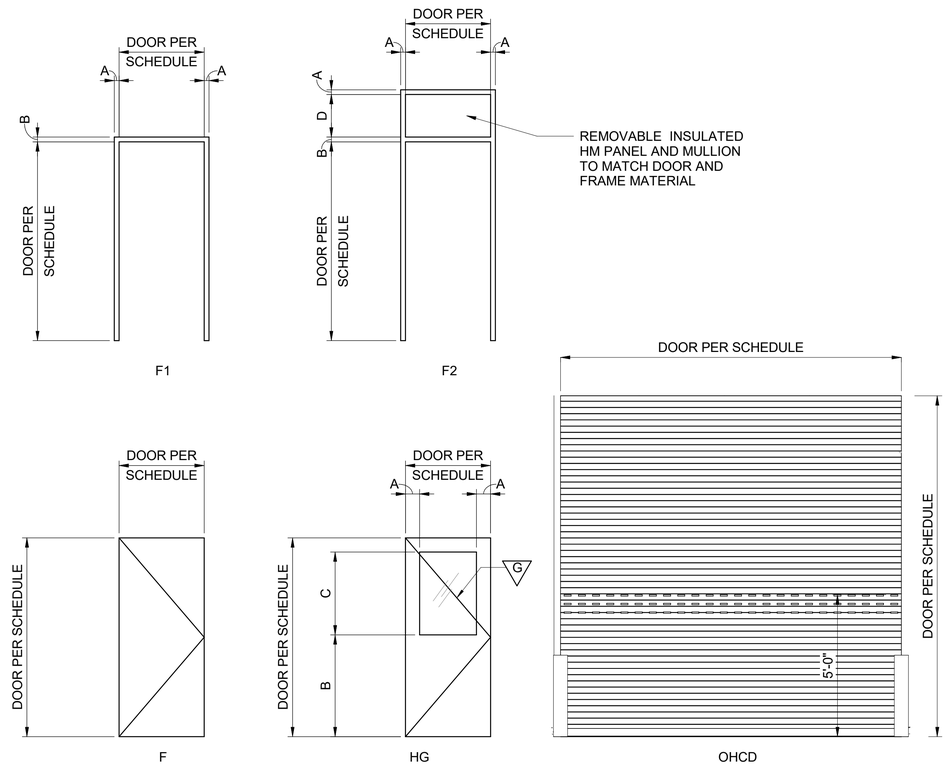

DOOR AND FRAME TYPES
0 2' 4' 6'
SCALE IN FEET

STATE OF GEORGIA
RYAN JACOBS
CERTIFICATE NO. 840178SF
REGISTERED ARCHITECT
6/26/2024

no.	date	by	ckd	description
0	6/26/24	RDJ	RPL	ISSUED FOR CONSTRUCTION

BURNS McDONNELL
ARCHITECTS P.C.

date	detailed
APRIL 13, 2023	B. MADDOX
designed	**checked**
R. JACOBS	R. LANG

Perry
HOUSTON COUNTY, GEORGIA

EAST PERRY WWTF
PROCESS BUILDING A
ARCHITECTURAL SCHEDULES AND DETAILS

project	contract
148538	

drawing **500A601** – rev. **0**
sheet of sheets
file

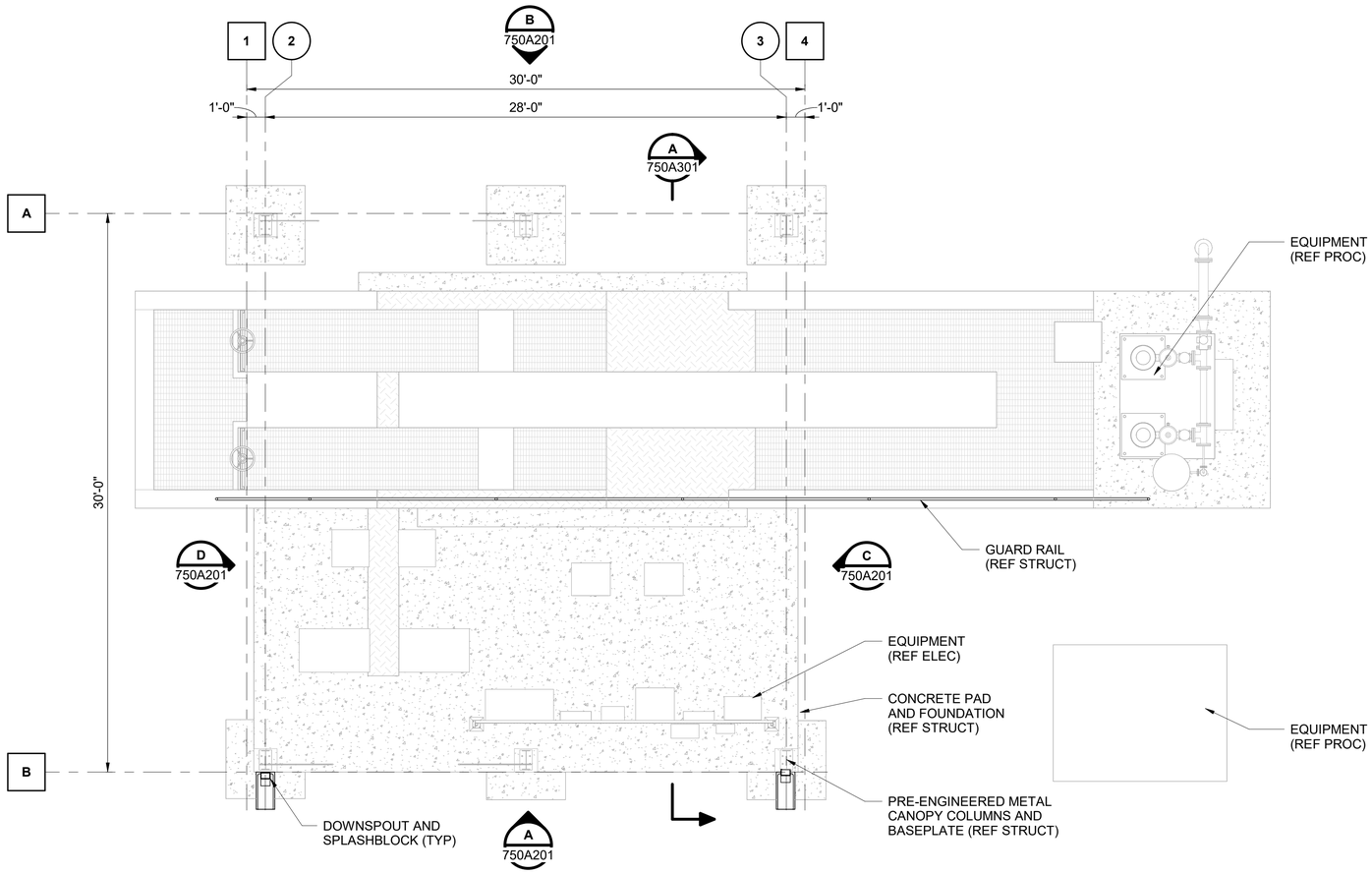

FLOOR PLAN

0 2' 4' 8'

SCALE IN FEET

NORTH

STATE OF GEORGIA
RYAN JACOBS
CERTIFICATE NO. BA017837
REGISTERED ARCHITECT

6/26/2024

no.	date	by	ckd	description
0	6/26/24	RDJ	RPL	ISSUED FOR CONSTRUCTION

BURNS McDONNELL
ARCHITECTS P.C.

date	detailed
MARCH 27, 2022	B. MADDOX
designed	**checked**
R. JACOBS	R. LANG

Perry

HOUSTON COUNTY, GEORGIA

EAST PERRY WWTF

UV DISINFECTION
FLOOR PLAN

project	contract
148538	

drawing **750A101** – rev. **0**

sheet of sheets

file

Scale For Microfilming
Millimeters
Inches

6/26/2024 12:27:15 PM Autodesk Docs://148538_East-Perry-WWTF/148538_A_UV DISINFECTION_2022.rvt

no.	date	by	ckd	description
0	6/26/24	RDJ	RPL	ISSUED FOR CONSTRUCTION

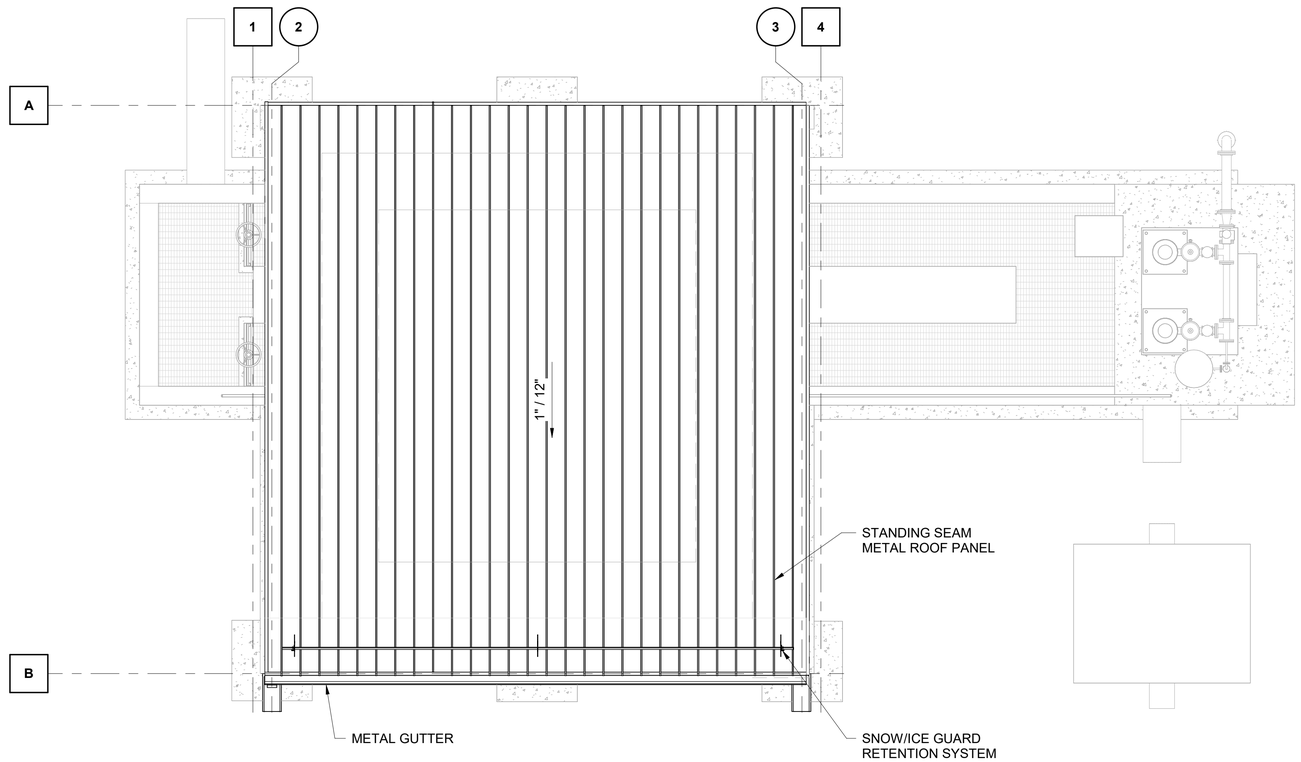

ROOF PLAN

0 2' 4' 8'
SCALE IN FEET

NORTH

STATE OF GEORGIA
RYAN JACOBS
CERTIFICATE NO. RA017001
REGISTERED ARCHITECT
6/26/2024

BURNS McDONNELL
ARCHITECTS P.C.

date AUGUST 14, 2023	detailed B. MADDOX
designed R. JACOBS	checked R. LANG

Perry
HOUSTON COUNTY, GEORGIA

EAST PERRY WWTF
UV DISINFECTION
ROOF PLAN

project 148538	contract
drawing 750A102	rev. 0
sheet	of sheets
file	

Scale For Microfilming
Millimeters
Inches

no.	date	by	ckd	description
0	6/26/24	RDJ	RPL	ISSUED FOR CONSTRUCTION

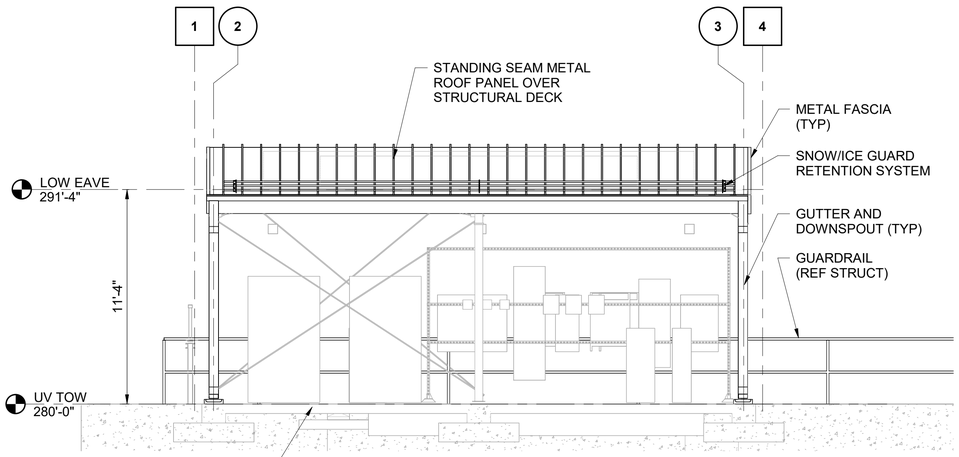

ELEVATION A 750A101
SOUTH
0 2' 4' 8'
SCALE IN FEET

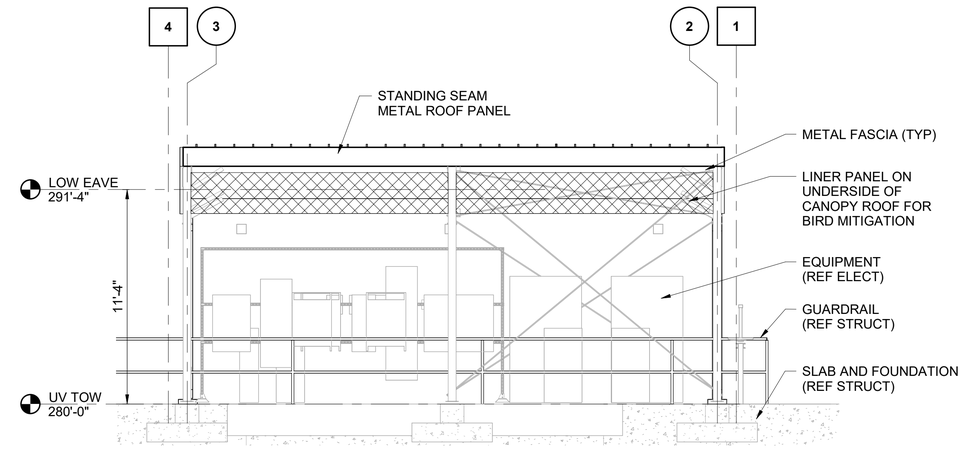

ELEVATION B 750A101
NORTH
0 2' 4' 8'
SCALE IN FEET

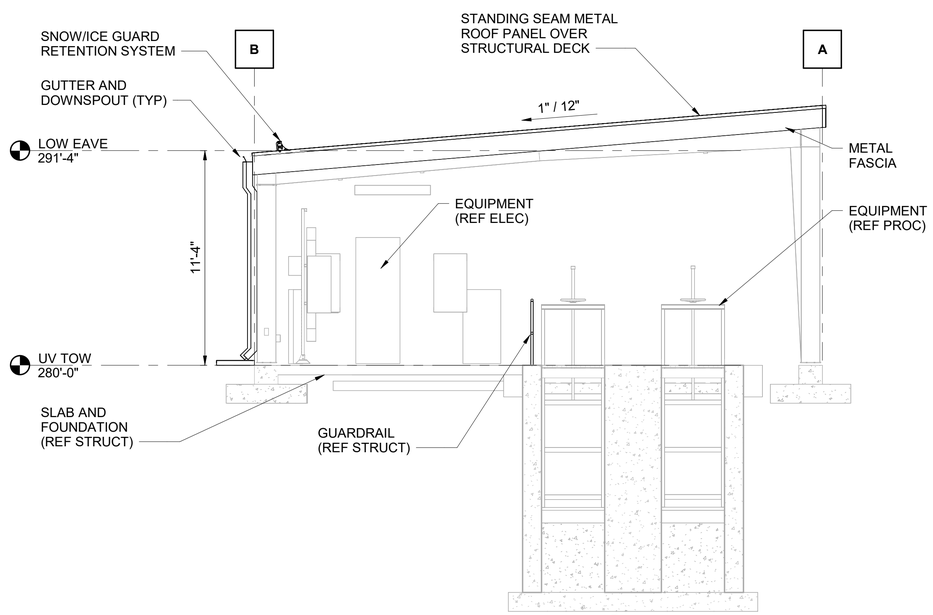

ELEVATION C 750A101
EAST
0 2' 4' 8'
SCALE IN FEET

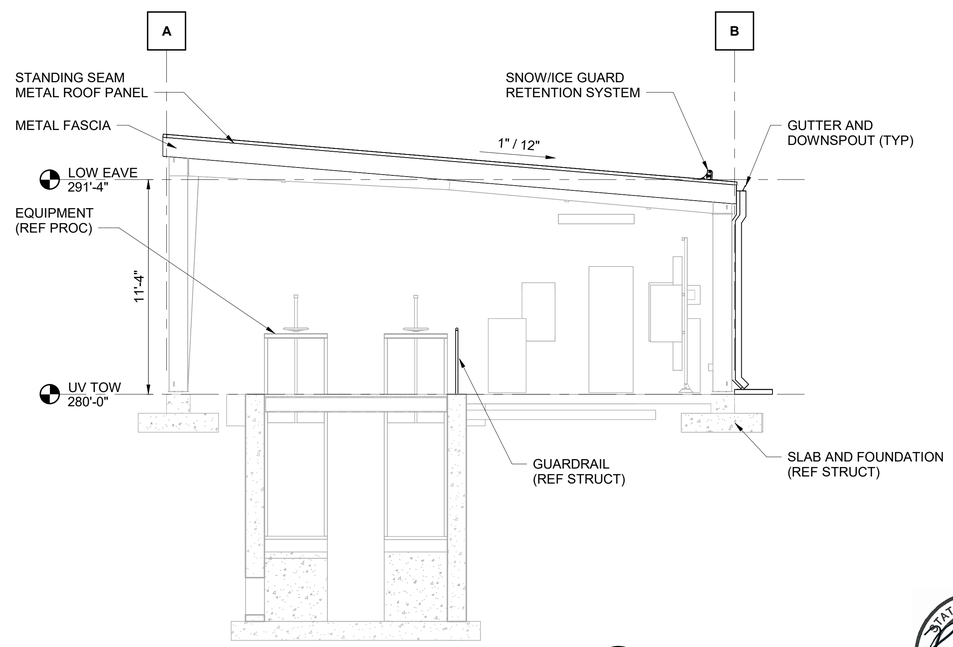

ELEVATION D 750A101
WEST
0 2' 4' 8'
SCALE IN FEET

STATE OF GEORGIA
RYAN JACOBS
CERTIFICATE NO. PA017001
REGISTERED ARCHITECT
6/26/2024

BURNS McDONNELL
ARCHITECTS P.C.

date	detailed
AUGUST 14, 2023	B. MADDOX
designed	**checked**
R. JACOBS	R. LANG

Perry
HOUSTON COUNTY, GEORGIA

EAST PERRY WWTF
UV DISINFECTION
ELEVATIONS

project	contract
148538	

drawing **750A201** – rev. **0**
sheet of sheets
file

Millimeters
Scale For Microfilming
Inches

no.	date	by	ckd	description
0	6/26/24	RDJ	RPL	ISSUED FOR CONSTRUCTION

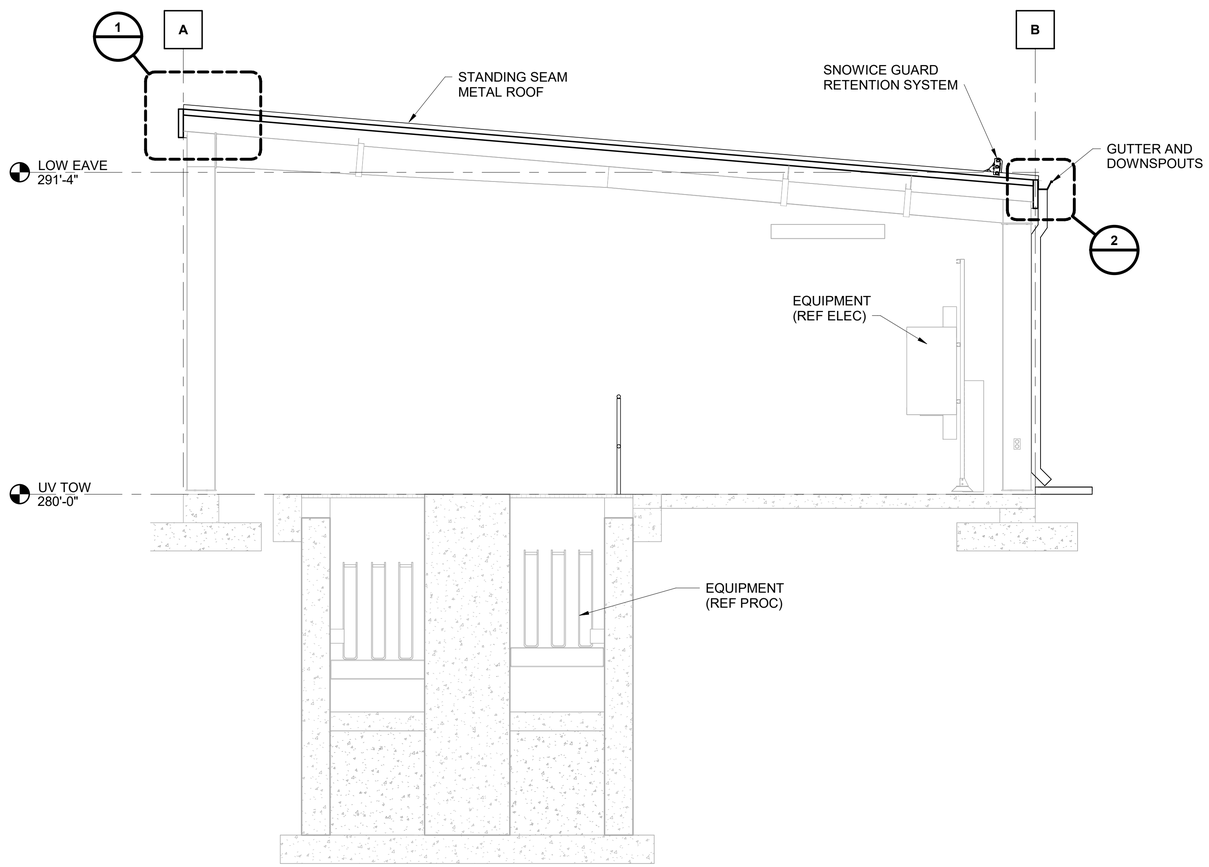

SECTION A 750A101

0 2' 4' 6'

SCALE IN FEET

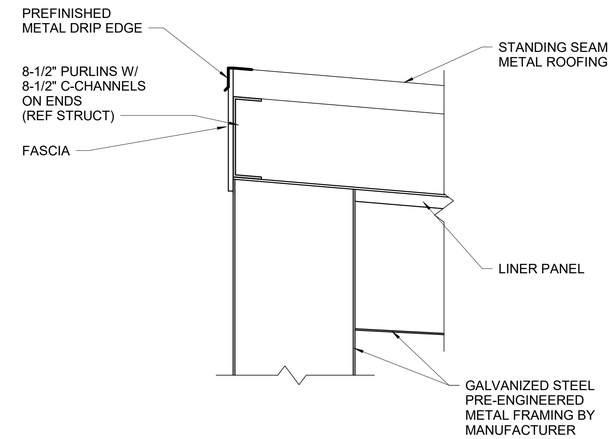

DETAIL 1

0 1/2' 1' 1 1/2'

SCALE IN FEET

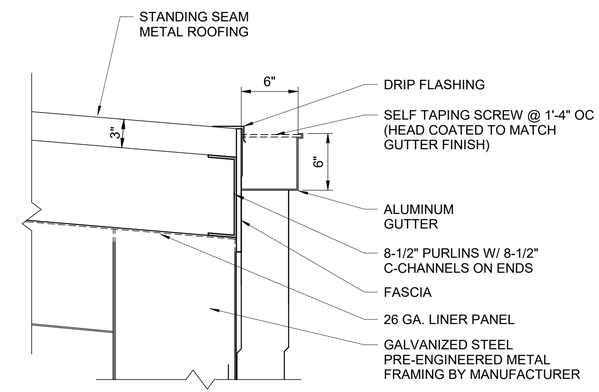

DETAIL 2

0 1/2' 1' 1 1/2'

SCALE IN FEET

STATE OF GEORGIA
RYAN JACOBS
CERTIFICATE NO. PA017207
REGISTERED ARCHITECT

6/26/2024

BURNS McDONNELL
ARCHITECTS P.C.

date	detailed
AUGUST 14, 2023	B. MADDOX
designed	**checked**
R. JACOBS	R. LANG

Perry

HOUSTON COUNTY, GEORGIA

EAST PERRY WWTF

UV DISINFECTION
SECTIONS AND DETAILS

project	contract
148538	

drawing	rev.
750A301	0

sheet of sheets

file

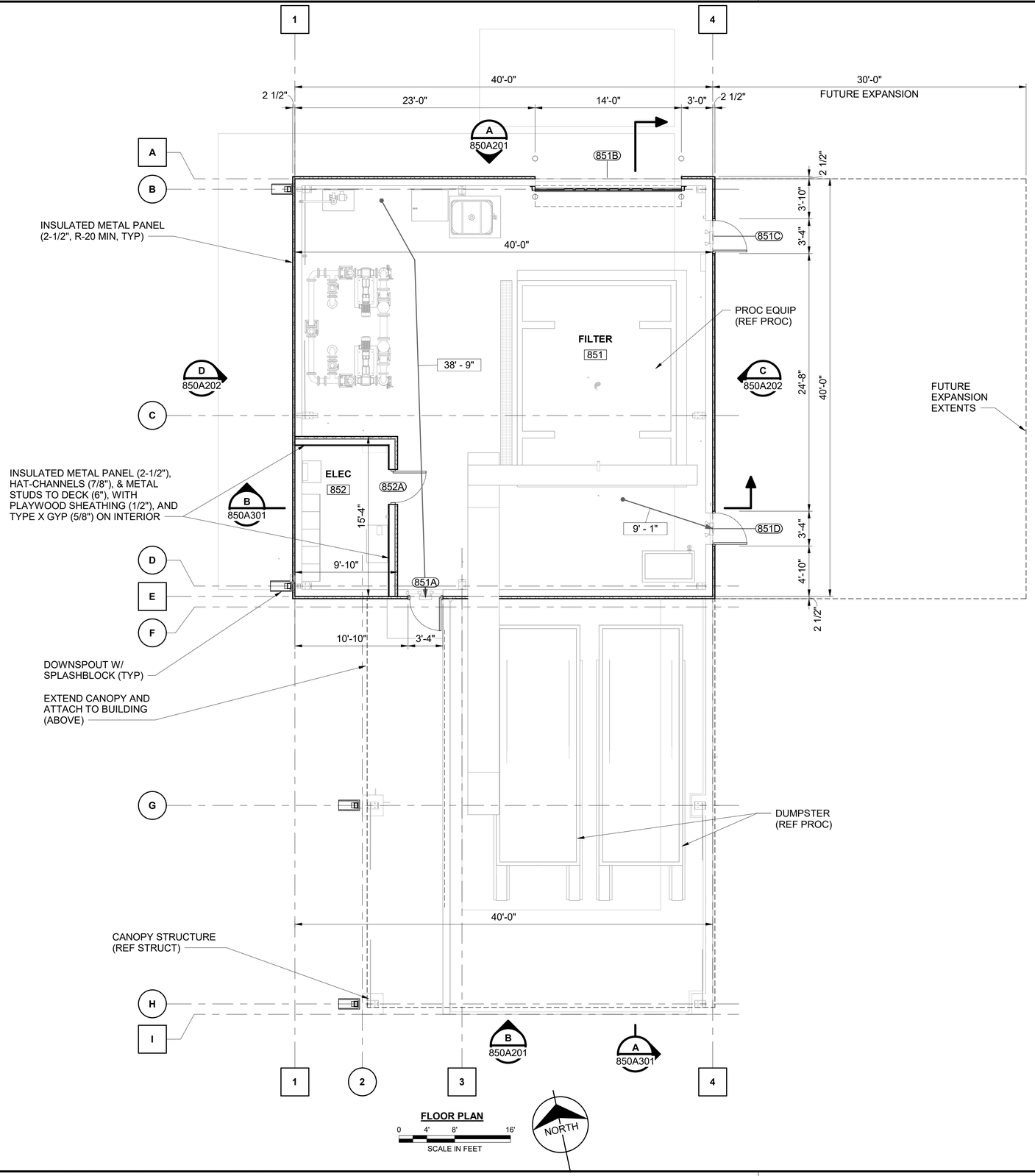

FLOOR PLAN

0 4' 8' 16'
SCALE IN FEET

BUILDING CODE INFORMATION

APPLICABLE CODE (HOUSTON COUNTY CLIMATE ZONE 3A):
INTERNATIONAL BUILDING CODE, 2018 EDITION
INTERNATIONAL FIRE CODE, 2018 EDITION
INTERNATIONAL MECHANICAL CODE, 2018 EDITION
INTERNATIONAL PLUMBING CODE, 2018 EDITION
NATIONAL ELECTRIC CODE, 2017 EDITION
INTERNATIONAL FUEL GAS CODE, 2018 EDITION

OCCUPANCY TYPE: (SECTION 306):
F-1, MODERATE HAZARD FACTORY INDUSTRIAL

CONSTRUCTION TYPE (TABLE 601): IIB (NON COMBUSTIBLE MATERIALS)
ALLOWABLE HEIGHT AND AREA: (TABLE 503):
BUILDING TOTAL:
FIRST FLOOR: 1633 SQ. FT.

1 STORY, 44'-0" FEET
ALLOWABLE BUILDING AREA 15,000 SQ. FT. (F-1 OCCUPANCY)
ALLOWABLE BUILDING HEIGHT: 2 STORIES, 55 FEET

OCCUPANT LOAD AND REQUIRED EGRESS WIDTH (TABLE 1004.1.2 -1005.3 SECTION 1015.1):
GROUP F-1: 1633 SQ. FT./100 SQ. FT. PER PERSON = 17 OCCUPANTS
17 TOTAL OCCUPANTS X .2 INCHES PER OCCUPANTS = 3.4 INCHES OF EGRESS WIDTH REQUIRED
1 EXIT REQUIRED, 3 EXITS PROVIDED, FOR A TOTAL OF 96 INCHES OF EGRESS WIDTH

TRAVEL DISTANCE (TABLE 1017.2):
F-1 OCCUPANCY (WITHOUT SPRINKLER SYSTEM; TWO EXITS) -200 FEET TRAVEL DISTANCE PERMITTED
ACTUAL TRAVEL DISTANCE: 38' - 9"

R-VALUES:
WALLS -R-19.5ci MIN
ROOF -R-25ci MIN
FOUNDATION: NOT REQUIRED

FIRE PROTECTION AND LIFE SAFETY SYSTEMS:

AN AUTOMATIC SPRINKLER SYSTEM IS NOT PROVIDED, AND IS NOT REQUIRED ACCORDING TO SECTION 903.2.4, GROUP F-1.

FIRE EXTINGUISHER LEGEND:
FE-1: MULTI-PURPOSE DRY CHEMICAL TYPE EXTINGUISHER. UL OR FM RATED
2-A:10:B:C, 10LB NOMINAL CAPACITY IN ENAMEL-STEEL CONTAINER
INSTALL W/ TOP OF EXTINGUISHER @ 5'-0" AFF

FE-2: CLEAN AGENT TYPE EXTINGUISHER UL RATING 5-B:C, 10LB NOMINAL CAPACITY IN ALUMINUM CONTAINER

STATE OF GEORGIA
RYAN JACOBS
CERTIFICATE NO. PA017001
REGISTERED ARCHITECT
6/26/2024

no.	date	by	ckd	description
0	6/26/24	RDJ	RPL	ISSUED FOR CONSTRUCTION

BURNS McDONNELL
ARCHITECTS P.C.

date MARCH 27, 2023	detailed B. MADDOX
designed R. JACOBS	checked R. LANG

Perry
HOUSTON COUNTY, GEORGIA

EAST PERRY WWTF
SOLIDS HANDLING BUILDING
FLOOR PLAN

project 148538	contract
drawing 850A101	rev. 0
sheet	of sheets
file	

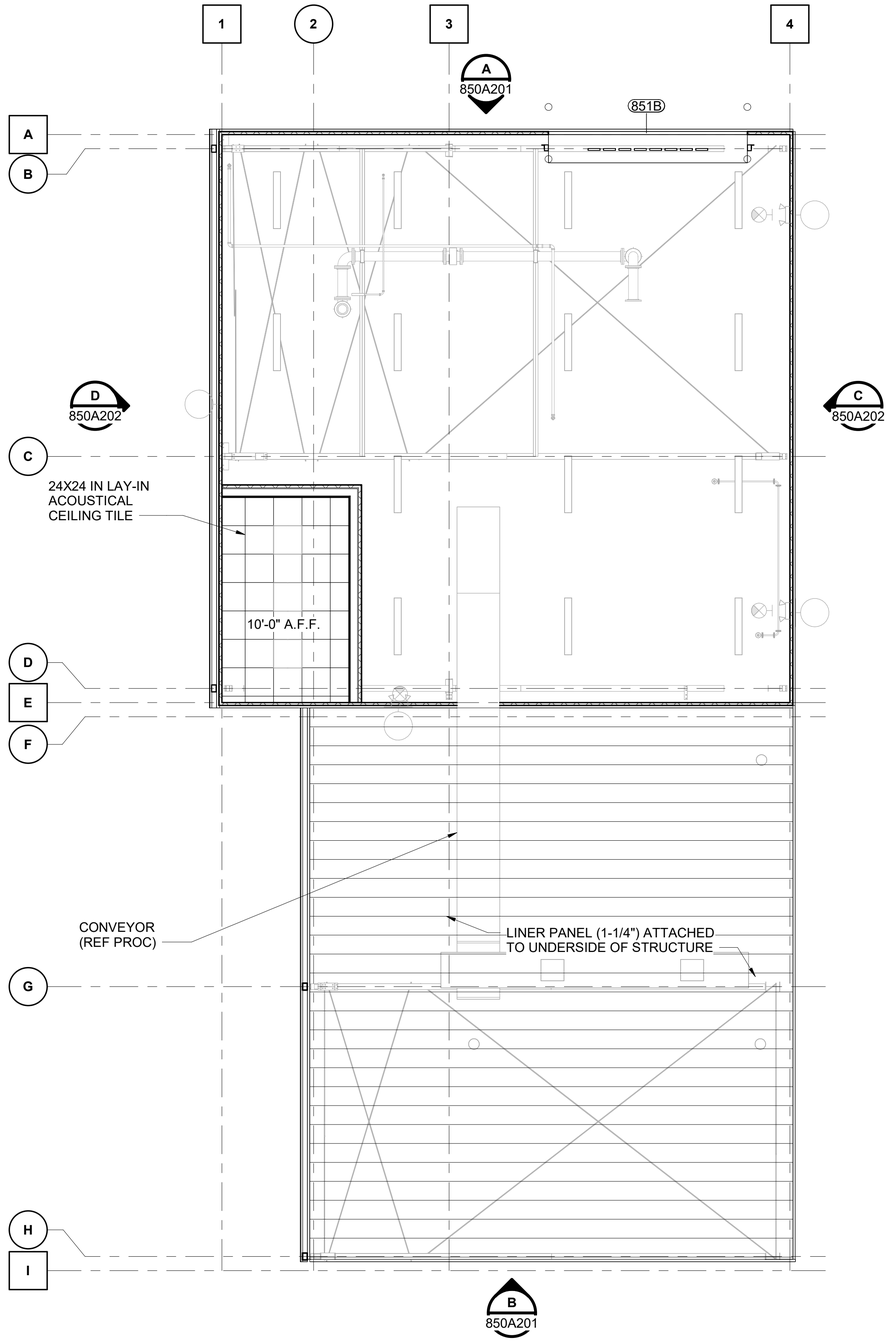

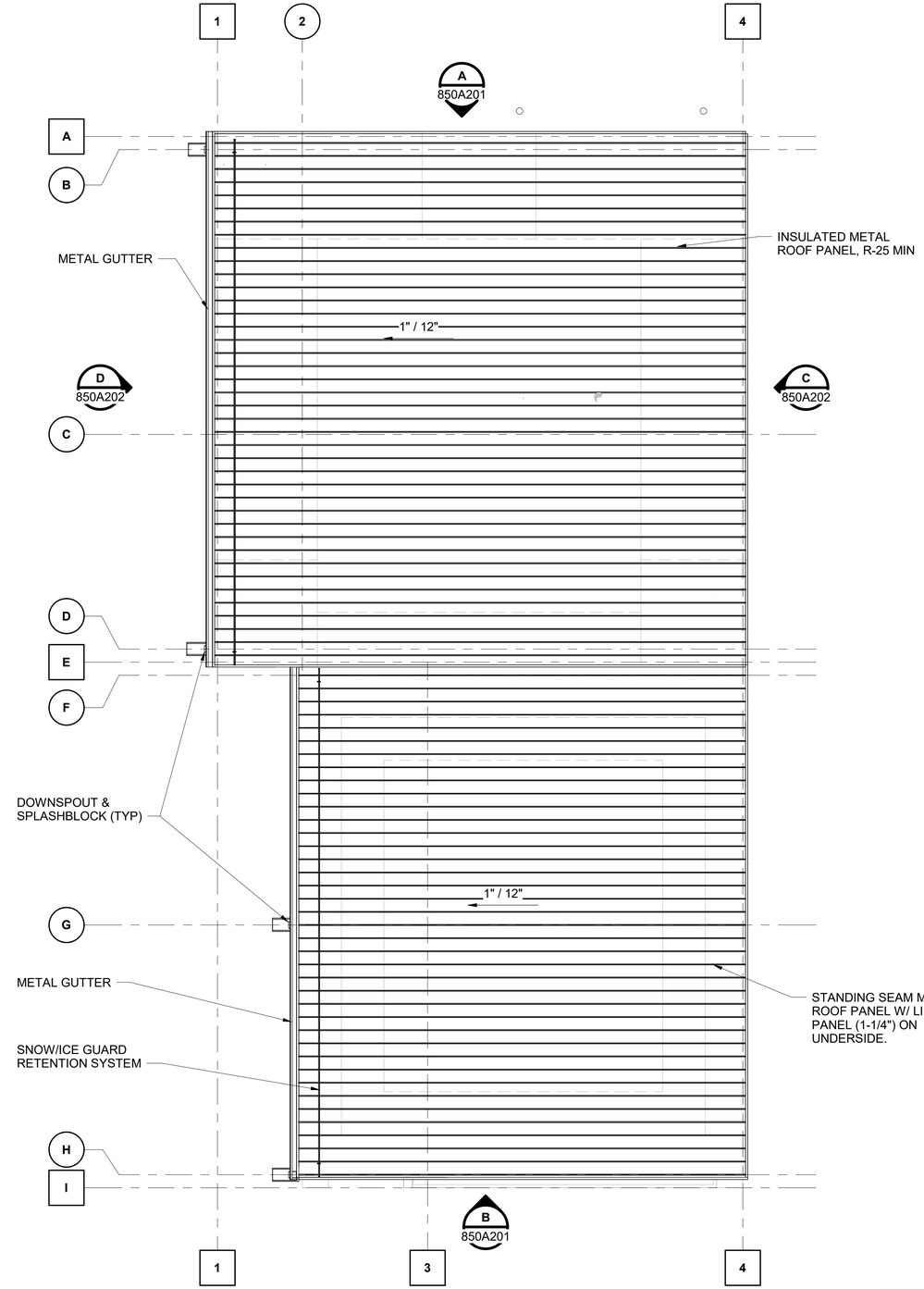

REFLECTED CEILING PLAN

0 4' 8' 16'
SCALE IN FEET

NORTH

ROOF PLAN

0 4' 8' 16'
SCALE IN FEET

NORTH

CEILING LEGEND:

2' x 2' ACOUSTICAL CEILING TILE

STATE OF GEORGIA
RYAN JACOBS
CERTIFICATE NO. RA017207
REGISTERED ARCHITECT
6/26/2024

no.	date	by	ckd	description
0	6/26/24	RDJ	RPL	ISSUED FOR CONSTRUCTION

BURNS McDONNELL
ARCHITECTS P.C.

date APRIL 13, 2023	detailed B. MADDOX
designed R. JACOBS	checked R. LANG

Perry

HOUSTON COUNTY, GEORGIA

EAST PERRY WWTF
SOLIDS HANDLING BUILDING
REFLECTED CEILING & ROOF PLAN

project 148538	contract
drawing 850A102	rev. 0
sheet	of sheets
file	

Scale For Microfilming
Millimeters
Inches

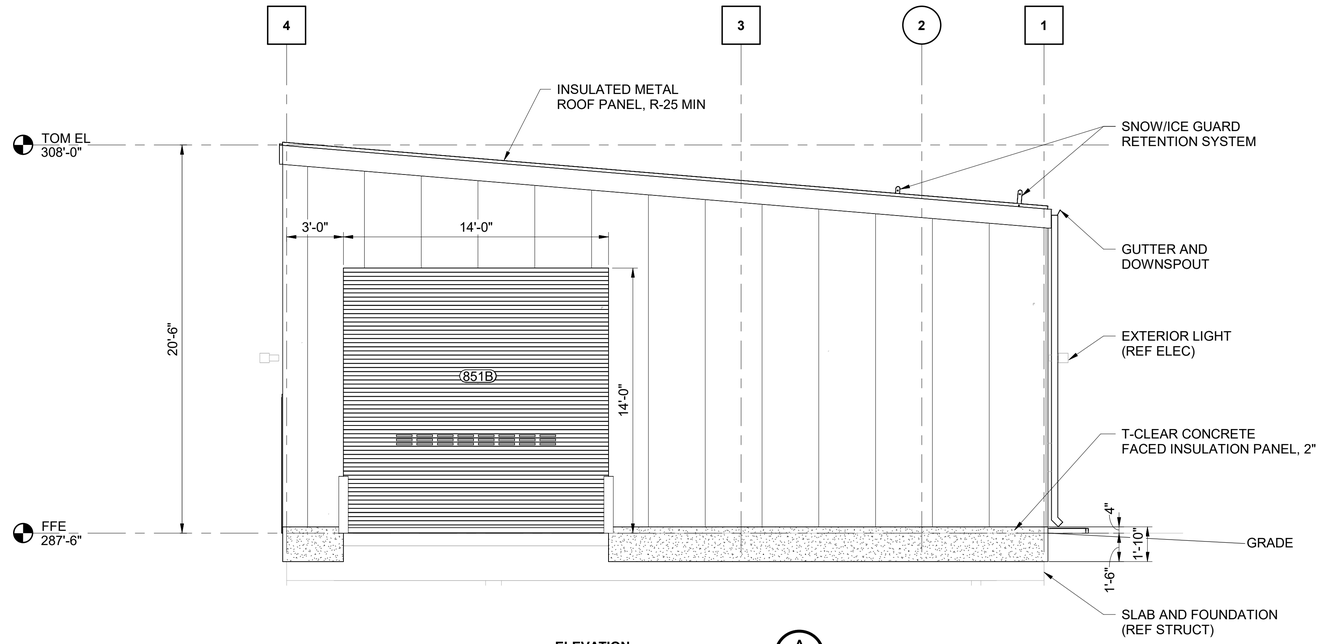

ELEVATION A 850A101

NORTH

0 2' 4' 8'

SCALE IN FEET

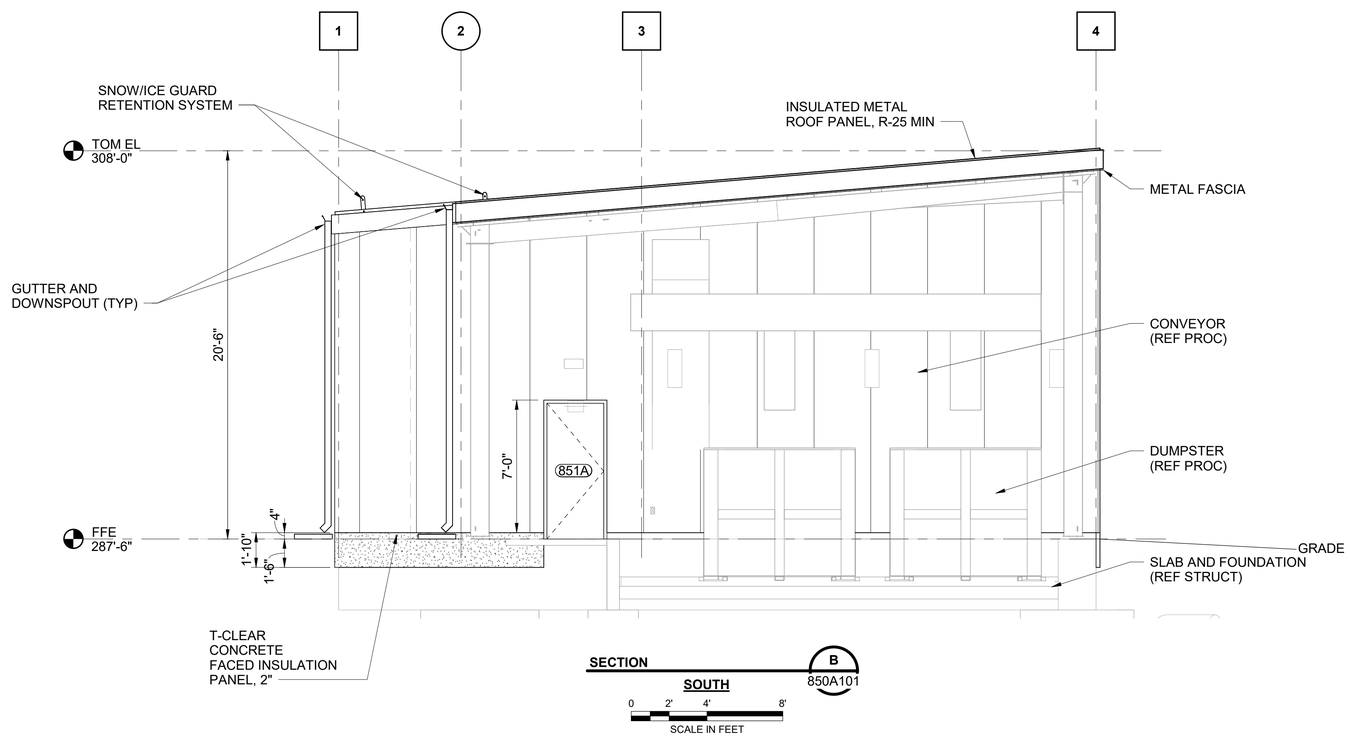

SECTION B 850A101

SOUTH

0 2' 4' 8'

SCALE IN FEET

no.	date	by	ckd	description
0	6/26/24	RDJ	RPL	ISSUED FOR CONSTRUCTION

BURNS McDONNELL
ARCHITECTS P.C.

date APRIL 13, 2023	detailed B. MADDOX
designed R. JACOBS	checked R. LANG

Perry
HOUSTON COUNTY, GEORGIA

EAST PERRY WWTF
SOLIDS HANDLING BUILDING
NORTH AND SOUTH ELEVATIONS

project 148538	contract
drawing 850A201	rev. 0
sheet	of sheets
file	

STATE OF GEORGIA
RYAN JACOBS
CERTIFICATE NO. RA017001
REGISTERED ARCHITECT
6/26/2024

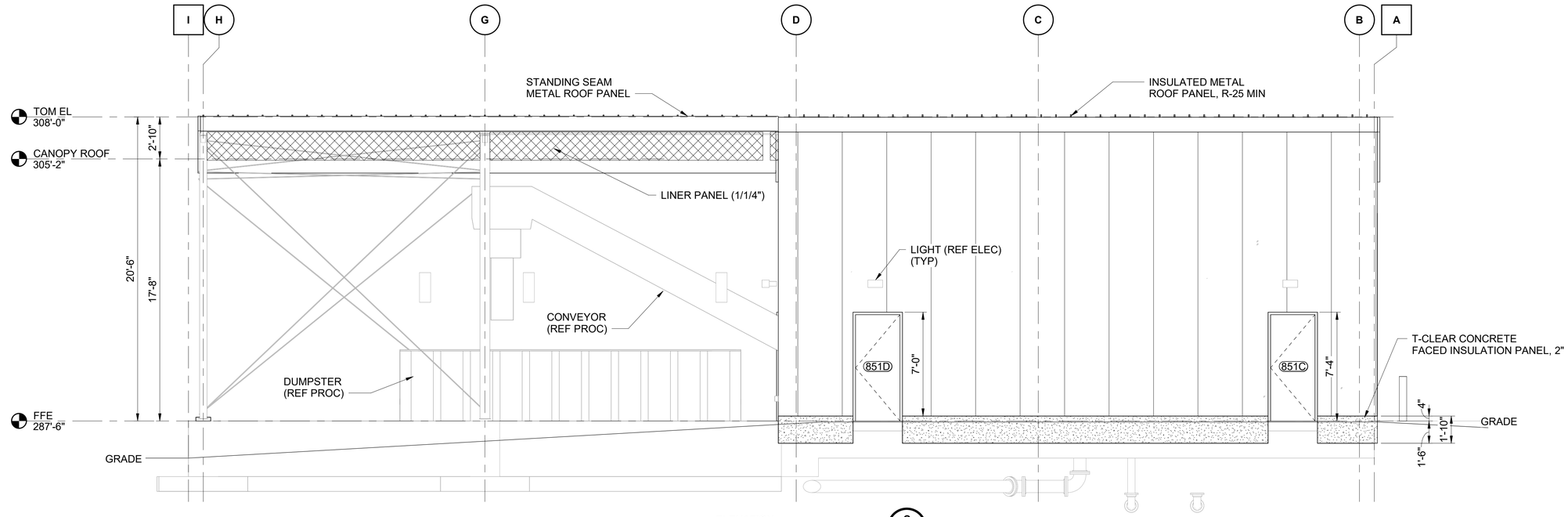

ELEVATION C 850A101

EAST

0 2' 4' 8'

SCALE IN FEET

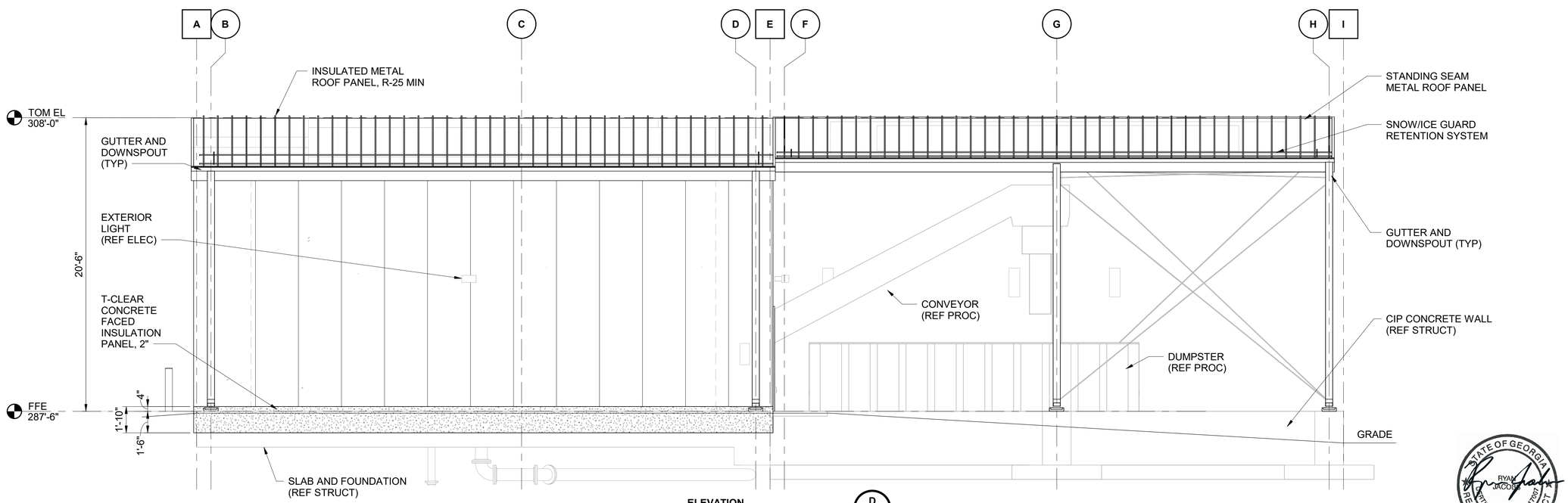

ELEVATION D 850A101

WEST

0 2' 4' 8'

SCALE IN FEET

STATE OF GEORGIA
RYAN JACOBS
CERTIFICATE NO. RA017001
REGISTERED ARCHITECT
6/26/2024

no.	date	by	ckd	description
0	6/26/24	RDJ	RPL	ISSUED FOR CONSTRUCTION

BURNS McDONNELL
ARCHITECTS P.C.

date: APRIL 13, 2023	detailed: B. MADDOX
designed: R. JACOBS	checked: R. LANG

Perry
HOUSTON COUNTY, GEORGIA

EAST PERRY WWTF
SOLIDS HANDLING BUILDING
EAST AND WEST ELEVATIONS

project: 148538	contract:
drawing: 850A202	rev.: 0
sheet	of sheets
file	

Scale For Microfilming
Millimeters
Inches

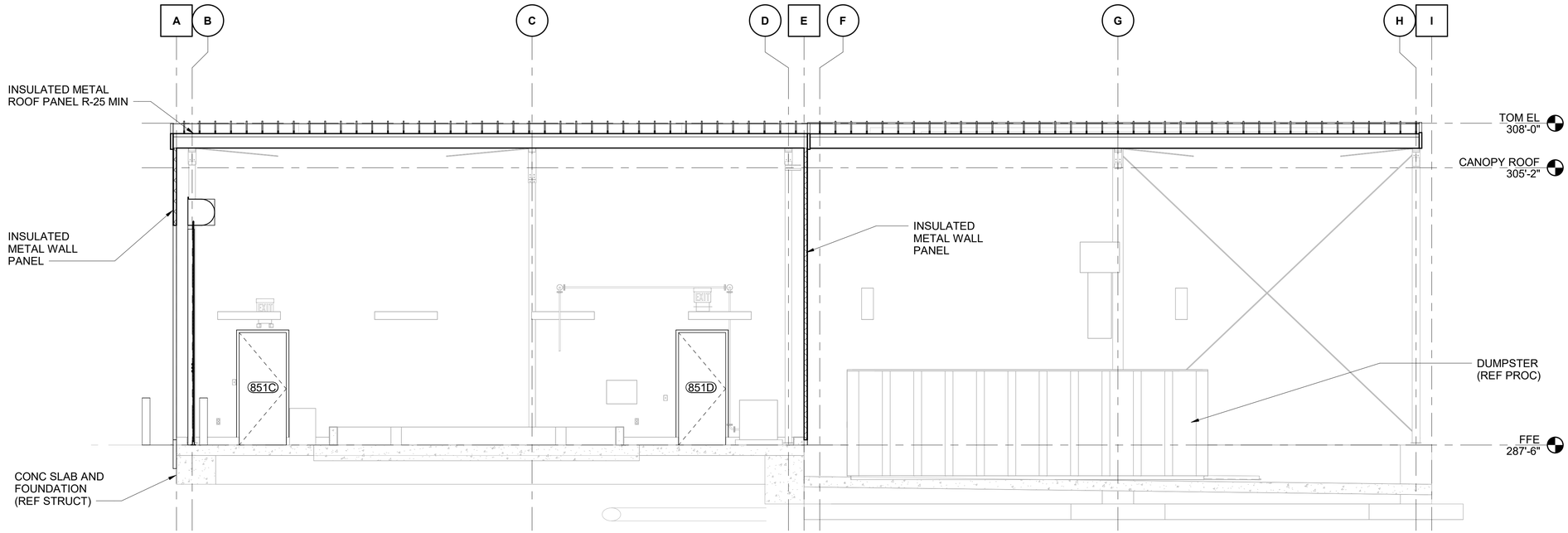

SECTION A 850A101

0 2' 4' 8'

SCALE IN FEET

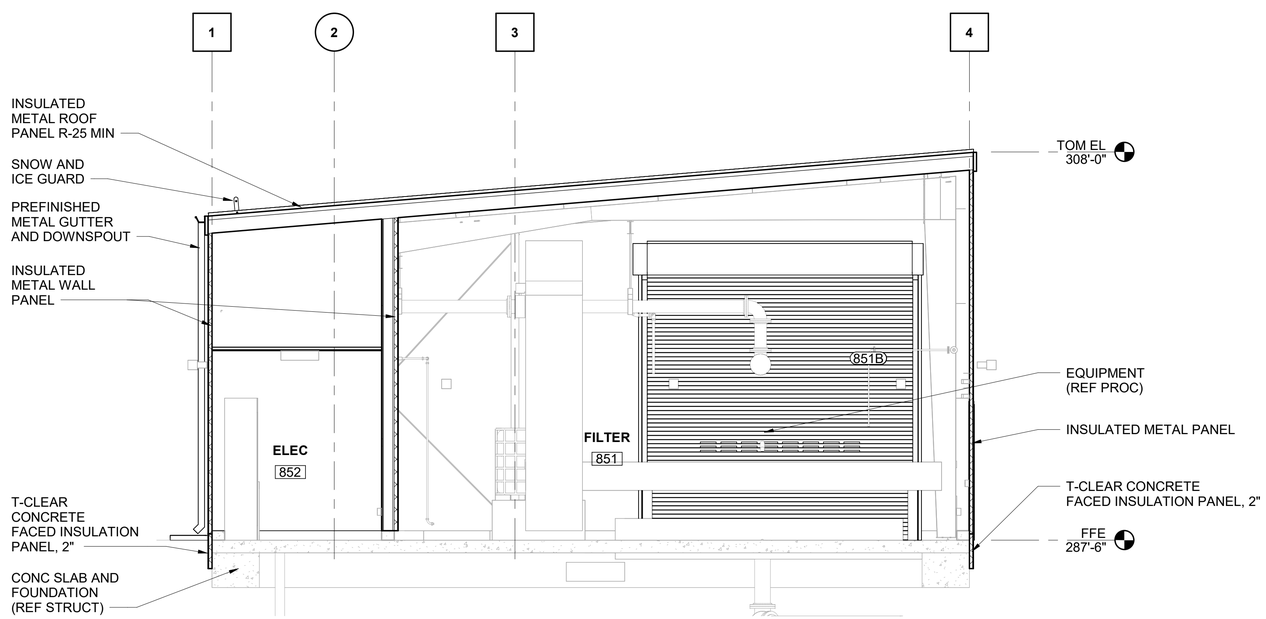

SECTION B 850A101

0 2' 4' 8'

SCALE IN FEET

no.	date	by	ckd	description
0	6/26/24	RDJ	RPL	ISSUED FOR CONSTRUCTION

BURNS McDONNELL ARCHITECTS P.C.

date	detailed
APRIL 13, 2023	B. MADDOX
designed	**checked**
R. JACOBS	R. LANG

Perry

HOUSTON COUNTY, GEORGIA

EAST PERRY WWTF

SOLIDS HANDLING BUILDING
BUILDING SECTIONS

project	contract
148538	

drawing **850A301** – rev. **0**

sheet of sheets

file

STATE OF GEORGIA
RYAN JACOBS
CERTIFICATE NO. PA017001
REGISTERED ARCHITECT

6/26/2024

Scale For Microfilming
Millimeters
Inches

DOOR SCHEDULE

DOOR NUMBER	DOOR PAIR	DOOR SIZE WIDTH	DOOR SIZE HEIGHT	TYPE	MATERIAL	FINISH	FRAME TYPE	FRAME MATERIAL	FRAME FINISH	DETAIL HEAD	DETAIL JAMB	DETAIL SILL	HARDWARE SET	REMARKS
851A	-	3'-0"	7'-2"	F	HM	PT	F1	HM	PT	2	2	1	01	INSULATED
851B	-	14'-0"	14'-0"	OHC	STL	PF	N/A	STL	PF	-	-	-	-	INSULATED
851C	-	3'-0"	7'-2"	F	HM	PT	F1	HM	PT	2	2	1	01	INSULATED
851D	-	3'-0"	7'-2"	F	HM	PT	F1	HM	PT	2	2	1	01	INSULATED
852A	-	3'-0"	7'-2"	F	HM	PT	F1	HM	PT	1	1	1	03	INSULATED

DOOR SCHEDULE REMARKS:
1. REFERENCE DETAILS ON SHEET 100/A005

ROOM FINISH SCHEDULE

ROOM NUMBER	ROOM NAME	FLOOR	BASE MATERIAL	NORTH WALL	EAST WALL	SOUTH WALL	WEST WALL	CEILING	REMARKS
851	FILTER	10	20	30	30	30	30	40	
852	ELEC	10	21	31	31	31	31	41	

ROOM FINISH SCHEDULE REMARKS:
1. REFERENCE DETAILS ON SHEET 100/A006

ROOM FINISH SHEDULE REMARKS:
FLOOR
10 - SEALED CONCRETE

BASE
20 - NO BASE
21 - RUBBER BASE

WALLS
30 - NO FINISH (EXPOSED METAL PANEL OR CONCRETE)
31 - PAINTED GYP

CEILING
40 - NO FINISH (OPEN TO STRUCTURE)
41 - 24" X 24" LAY-IN CEILING TILE

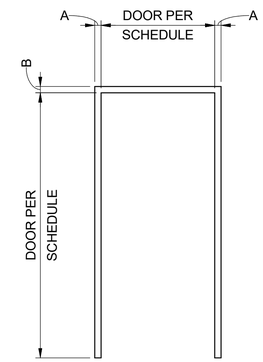

F1

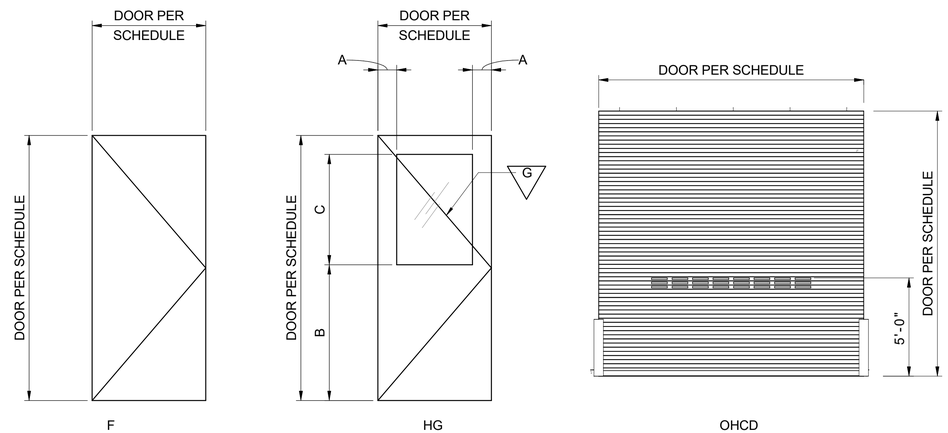

F HG OHCD

DOOR AND FRAME TYPES

0 1' 2' 4'
SCALE IN FEET

no.	date	by	ckd	description
0	6/26/24	RDJ	RPL	ISSUED FOR CONSTRUCTION

BURNS McDONNELL
ARCHITECTS P.C.

date	detailed
APRIL 8, 2024	E. FIELDS
designed	**checked**
R. JACOBS	R. LANG

Perry
HOUSTON COUNTY, GEORGIA

EAST PERRY WWTF
SOLIDS HANDLING BUILDING
ARCHITECTURAL SCHEDULES AND DETAILS

project	contract
148538	

drawing **850A601** – rev. **0**
sheet of sheets
file

STATE OF GEORGIA
RYAN JACOBS
CERTIFICATE NO. 040708
REGISTERED ARCHITECT
6/26/2024

Scale For Microfilming
Millimeters
Inches

HVAC LEGEND

- CONTROL DAMPER, MOTOR OPERATED
- MANUAL BALANCE DAMPER
- BACKDRAFT DAMPER
- ACCESS DOOR (AD) ACCESS PANEL (AP)
- DAMPERS: FIRE (F) - SMOKE (S) - FIRE SMOKE (F/S) -
- SECURITY BARS
- FLEXIBLE DUCT CONNECTION
- RECTANGLUAR ELBOW WITH TURNING VANES
- RECTANGULAR TEE WITH TURNING VANES
- RECTANGULAR RADIUS ELBOW
- ROUND & RECTANGULAR DUCT TAKEOFF
- RISE IN RESPECT TO AIR-FLOW
- DROP IN RESPECT TO AIR-FLOW
- SQUARE OR RECTANGULAR TO ROUND TRANSITION
- SUPPLY AIR OR OUTSIDE AIR RECTANGULAR DUCT SECTION
- RETURN AIR RECTANGULAR DUCT SECTION
- EXHAUST AIR RECTANGULAR DUCT SECTION
- SUPPLY AIR OR OUTSIDE AIR ROUND DUCT SECTION
- RETURN AIR ROUND DUCT SECTION
- EXHAUST AIR ROUND DUCT SECTION
- ROUND FLEXIBLE DUCT (5'-0" MAX LENGTH)
- SQUARE OR RECTANGULAR SUPPLY DIFFUSER
- RETURN AIR DIFFUSER
- EXHAUST AIR DIFFUSER
- THERMOSTAT
- HUMIDISTAT
- CARBON DIOXIDE SENSOR
- CARBON MONOXIDE SENSOR
- MOTOR
- OCCUPANCY SENSOR
- EMERGENCY SHUT-OFF SWITCH
- FAN CONTROL PANEL
- STATIC PRESSURE SENSOR
- DIFFERENTIAL PRESSURE SENSOR
- BREATHING AIR DROP
- COMPRESSED AIR DROP
- LINEAR SLOT DIFFUSER
- VAV- VARIABLE AIR VOLUME TERMINAL BOX
- (3'-0") FINNED TUBE RADIATION. LENGTH OF ELEMENT SHOWN IN PARENTHESIS
- AIRFLOW ARROW

PIPE ACCESSORIES SYMBOLS

- GATE VALVE
- OS&Y OUTSIDE SCREW & YOKE VALVE
- BUTTERFLY VALVE
- CHECK VALVE
- 2-WAY VALVE
- 3-WAY VALVE
- BALL VALVE
- BALANCING VALVE / CIRCUIT SETTER
- RELIEF, SAFETY OR THERMAL RELIEF VALVE
- MOTORIZED CONTROL VALVE
- HOSE GATE DRAIN VALVE
- GLOBE VALVE
- PLUG VALVE
- SRC SPRING RETURN CLOSED BALL VALVE
- ANGLE VALVE
- SELF CONTAINED PRESSURE REDUCING (REGULATING) VALVE
- AV AUTOMATIC AIR VENT ASSEMBLY
- MV MANUAL AIR VENT ASSEMBLY - SEE SPECIFICATIONS FOR APPROPRIATE VALVE TYPE
- FLEX CONNECTION
- PUMP
- THERMOMETER
- BFP BACKFLOW PREVENTION ASSEMBLY
- SUCTION DIFFUSER
- PRESSURE GUAGE
- Y-TYPE STRAINER
- REMOVABLE CAP
- REMOVABLE PLUG
- REDUCER (CONCENTRIC)
- UNION
- BLIND FLANGE
- TEST CONNECTION
- M METER
- FM FLOW METER
- S STRAINER
- IF INSULATING FLANGE
- PIPE WITH HEAT TRACE
- FLOW ARROW

ABBREVIATIONS

12"Ø	ROUND DUCT DIMENSION	IFB	INTEGRAL FACE AND BYPASS
24x12	RECTANGULAR DUCT DIMENSION (INCHES)	IH	INFRARED HEATER
ACU	AIR CONDITIONING UNIT	KEF	KITCHEN EXHAUST FAN
AD	ACCESS DOOR	L	LOUVER
AFF	ABOVE FINISHED FLOOR	LAT	LEAVING AIR TEMPERATURE
AFMA	AIR FLOW MEASURING ARRAY STATION	LWT	LEAVING WATER TEMPERATURE
AHU	AIR HANDLING UNIT	MA	MIXED AIR
AS	AIR SEPARATOR	MAT	MIXED AIR TEMPERATURE
ASD	ADJUSTABLE SPEED DRIVE	MAU	MAKEUP AIR UNIT
B	BOILER	MCA	MINIMUM CIRCUIT AMPACITY
BFP	BACKFLOW PREVENTER	MFR	MANUFACTURER
BHP	BRAKE HORSEPOWER	MOCP	MAXIMUM OVERCURRENT PROTECTION
BOD	BOTTOM OF DUCT	N.C.	NORMALLY CLOSED (FAIL POSITION)
BOP	BOTTOM OF PIPE	N.O.	NORMALLY OPEN (FAIL POSITION)
BT	BUFFER TANK	N/A	NOT APPLICABLE
CF	CEILING FAN	NG	NATURAL GAS
CH	CHILLER	NO.	NUMBER
CHWP	CHILLED WATER PUMP	OA	OUTSIDE AIR
CI	COMBUSTION INTAKE	OB	OPPOSED BLADE
CL	CENTER LINE OF PIPE ELEVATION	ODP	OPEN DRIP PROOF
CRAC	COMPUTER ROOM AIR CONDITIONER	PB	PARALLEL BLADE
CU	CONDENSING UNIT	PCHWP	PRIMARY CHILLED WATER PUMP
CUH	CABINET UNIT HEATER	PFX	PLATE AND FRAME HEAT EXCHANGER
DB	DRY BULB	PRESS	PRESSURE
DH	DEHUMIDIFIER	PRV	PRESSURE REDUCING VALVE
DIV	DIVISION	QTY	QUANTITY
DN	DOWN	RA	RETURN AIR
DOAS	DEDICATED OUTDOOR AIR SYSTEM	RE	RELIEF AIR
DSFCU	DUCTLESS SPLIT FAN COIL UNIT	RF	RETURN FAN
DSS	DUCTLESS SPLIT SYSTEM	RG	REFRIGERANT HOT GAS DISCHARGE
EA	EXHAUST AIR	RH	RELATIVE HUMIDITY
EAT	ENTERING AIR TEMPERATURE	RL	REFRIGERANT LIQUID
ECM	ELECTRONICALLY COMMUTATED MOTOR	RLF	RELIEF FAN
EF	EXHAUST FAN	RS	REFRIGERANT SUCTION
EFF	EFFICIENCY	SA	SUPPLY AIR
EL	ELEVATION	SCH	SCHEDULE
ELL	ELBOW	SCHWP	SECONDARY CHILLED WATER PUMP
EMCS	ENERGY MANAGEMENT CONTROL SYSTEM	SCR	SPRING RETURN CLOSED
ESP	EXTERNAL STATIC PRESSURE	SP	STATIC PRESSURE SENSOR
ET	EXPANSION TANK	STM	STEAM
EWT	ENTERING WATER TEMPERATURE	SW	SOCKET WELD
EXIST	EXISTING	TA	TRANSFER AIR
FCU	FAN COIL UNIT	TEFC	TOTALLY ENCLOSED FAN COOLED
FD	FLOOR DRAIN	TEMP	TEMPERATURE
FE	FLUE EXHAUST	TENV	TOTALLY ENCLOSED, NOT VENTILATED
FF	FLAT FACED	TOA	TREATED OUTSIDE AIR
FLA	FULL LOAD AMPS	TOD	TOP OF DUCT
FPI	FINS PER INCH	TOS	TOP OF STEEL
FPVAV	FAN POWERED VARIABLE AIR VOLUME	UH	UNIT HEATER
FSC	FAN SPEED CONTROLLER	V	VENT
HHW	HEATING HOT WATER	VAV	VARIABLE AIR VOLUME
HP	HEAT PUMP	VFD	VARIABLE FREQUENCY DRIVE
HUM	HUMIDIFIER	VRF	VARIABLE REFRIGERANT FLOW
HWB	HEATING HOT WATER BOILER	WB	WET BULB
HWP	HEATING HOT WATER PUMP	WE	WELD END
HX	HEAT EXCHANGER	WN	WELD NECK
I.E.	INVERT ELEVATION		

PIPE SYMBOLS

- PIPE ELBOW
- PIPE DOWN
- PIPE UP
- PIPE CONTINUATION

PIPELINE ABBREVIATIONS

BLWDN	BLOWDOWN
CD	CONDENSATE DRAIN
CHR	CHILLED WATER RETURN
CHS	CHILLED WATER SUPPLY
CT	CHEMICAL TREATMENT
D	DRAIN
DI	DEIONIZED WATER
HWR	HOT WATER RETURN
HWS	HOT WATER SUPPLY
MW	MAKEUP WATER (AFTER BACKFLOW PREVENTER)
NG	NATURAL GAS

GENERAL NOTES

1. LEGEND IS GENERAL IN NATURE AND MAY INDICATE MORE INFORMATION THAN IS APPLICABLE TO PROJECT. SEE PLANS FOR SPECIFIC SYMBOLS AND ABBREVIATIONS.
2. PROVIDE ALL MATERIALS, VALVES, HANGERS, ETC. AND EQUIPMENT AND PERFORM ALL LABOR REQUIRED TO INSTALL COMPLETE AND OPERABLE MECHANICAL SYSTEMS AS INDICATED ON THE DRAWINGS, AS SPECIFIED, AND AS REQUIRED BY CODE.
3. INSTALL ALL MECHANICAL EQUIPMENT AND APPURTENANCES IN ACCORDANCE WITH MANUFACTURERS RECOMMENDATIONS, CONTRACT DOCUMENTS, AND APPLICABLE CODES AND REGULATIONS.
4. COORDINATE CONSTRUCTION OF ALL MECHANICAL WORK WITH STRUCTURAL, CIVIL, ELECTRICAL WORK, ETC., SHOWN ON OTHER CONTRACT DOCUMENT DRAWINGS.
5. UNLESS OTHERWISE INDICATED MAINTAIN A MINIMUM OF 6'-8" CLEARANCE TO UNDERSIDE OF PIPES, CONDUITS, ETC., THROUGHOUT ACCESS ROUTES AND IN MECHANICAL ROOMS.
6. LOCATE ALL MECHANICAL EQUIPMENT FOR UNOBSTRUCTED ACCESS TO UNIT ACCESS PANELS, CONTROLS, AND VALVING.
7. VERIFY DIMENSIONS AND CONNECTION SIZE WITH FURNISHED EQUIPMENT.
8. ALL ELEVATIONS ARE ABOVE FINISHED FLOOR TO BOTTOM OF DUCT, PIPE, OR PIPE INSULATION UNLESS NOTED OTHERWISE.
9. DUCT DIMENSIONS INDICATED REFER TO SHEET METAL DIMENSIONS. SHEET METAL SIZE SHALL BE AIR OPENING DIMENSION PLUS THE THICKNESS OF ACOUSTICAL LINER WHERE LINER IS INSTALLED. WHERE LINER IS NOT INSTALLED, AIR OPENING SIZE AND SHEET METAL SIZE SHALL BE THE SAME.
10. DUCT STATIC PRESSURE CLASSIFICATION: UNLESS OTHERWISE INDICATED, CONSTRUCT DUCTS ON THE DISCHARGE SIDE OF FANS TO HAVE 1.0 IN. W.C. POSITIVE PRESSURE AND DUCTS ON THE INLET SIDE OF EQUIPMENT TO HAVE 1.0 IN. W.C. NEGATIVE PRESSURE CLASSIFICATIONS. DUCTS ON OUTLET SIDE OF AHU'S SHALL HAVE 3.0 INCH POSITIVE PRESSURE CLASS DUCT.
11. COORDINATE ALL WALL PENETRATIONS WITH STRUCTURAL AND ARCHITECTURAL PLANS.
12. INSTALL TEMPERATURE CONTROLS AT 48" ABOVE FINISHED FLOOR AND COORDINATE WITH OTHER DEVICES LOCATED ON WALLS. COORDINATE WITH ARCHITECTURAL WALL FINISHES.
13. CONTRACTOR SHALL AIR BALANCE ALL GRILLES TO CFM'S SHOWN ON PLANS.
14. MOUNT ALL OVERHEAD MECHANICAL EQUIPMENT AND FIXTURES WEIGHING 31 POUNDS OR MORE TO SUPPORTS THAT SHALL RESIST FORCES OF 0.5 TIMES THE EQUIPMENT WEIGHT IN ANY HORIZONTAL DIRECTION AND 1.5 TIMES THE EQUIPMENT WEIGHT IN THE DOWNWARD DIRECTION.

DETAIL / ENLARGED CALLOUT SYMBOL

INDICATES LIMITS OF DETAIL/SECTION

DETAIL/SECTION DESIGNATOR

A1
M-001

SHEET WHERE DETAIL/SECTION IS SHOWN

AIR DISTRIBUTION DEVICE IDENTIFICATION

AIR FLOW — NECK SIZE

QUANTITY — (2)175-8Ø / SA-A

SYSTEM TYPE — SPEC. TYPE

DETAIL/SECTION TITLE

A1 TITLE
SCALE:

LOCATION WHERE DETAIL / SECTION IS SHOWN ON SHEET

SECTION CUT SYMBOL

INDICATES PERSPECTIVE AND LIMITS OF SECTION

SECTION DESIGNATOR

A1
M-001

DRAWING WHERE SECTION IS SHOWN

GEORGIA REGISTERED No. PE 031237 PROFESSIONAL ENGINEER DANIEL FINKELSTEIN

06/26/2024

no.	date	by	ckd	description
0	6/26/24	AJC	DF	ISSUED FOR CONSTRUCTION

BURNS McDONNELL
4004 SUMMIT BLVD. NE, SUITE 1200
ATLANTA, GA 30319
770-587-4776
LICENSEE NO. PEF000100
AUTHORIZATION NO. J550903

date	detailed
04/12/24	A. CAULINEAU
designed	**checked**
D. FINKELSTEIN	D. OLSEN

Perry
HOUSTON COUNTY, GEORGIA

EAST PERRY WWTF
MECHANICAL LEGEND, ABBREVIATIONS AND GENERAL NOTES

project	contract
148538	

drawing **100M001** — rev. **0**

sheet of sheets

file

LEGEND & SYMBOLS

W-X-Y-Z
##

DEVICE SYMBOL, GENERIC
USED TO REPRESENT SENSORS, INSTRUMENTS SAFETIES, AND OTHER CONTROL DEVICES W-X-Y-Z : (SEE ABBREVIATIONS AND ACRONYMS) GENERIC USAGE TO SHOW LOCATION OF DEVICE; PROCESS OR DEVICE BEING MEASURED OR CONTROLLED; SIGNAL TYPE; MODIFIERS AND OTHER APPLICATION INFORMATION

W-X-Y-Z
##

DEVICE SYMBOL, GENERIC
MULTIPLE OUTPUT DEVICE WHERE AT LEAST 1 OUTPUT IS ALWAYS SAFETY INTERLOCK

W-X-Y-Z
DDC
##
DIR
REV

DEVICE SYMBOL, CONTROLLER
DDC : DIRECT DIGITAL CONTROL
: DEVICE NUMBER
DIR : DIRECT CONTROL ACTION, OR
REV : REVERSE CONTROL ACTION
W-X-Y-Z : (SEE ABBREVIATIONS AND ACRONYMS) GENERIC USAGE TO SHOW LOCATION OF DEVICE; PROCESS OR DEVICE BEING MEASURED OR CONTROLLED; SIGNAL TYPE; MODIFIERS AND OTHER APPLICATION INFORMATION

LDP
##

LOCAL DISPLAY PANEL
= SEQUENTIAL NUMBER
(WHEN MORE THAN 1 LDP)

H P L

PRESSURE SWITCH, DIFFERENTIAL, WITH GAGE
H = HIGH PRESSURE TAP
L = LOW PRESSURE TAP
SEE "DEVICE SYMBOL, GENERIC"

RST-BUT

RESET BUTTON FOR SAFETY RESET

SMOKE DETECTOR, DUCT-MOUNTED
SEE "DEVICE SYMBOL, GENERIC"

TEMPERATURE SENSOR, AVERAGING OR TEMPERATURE LOW LIMIT / FREEZESTAT
SEE "DEVICE SYMBOL, GENERIC"

TEMPERATURE SENSOR, POINT
SEE "DEVICE SYMBOL, GENERIC"

STAT

THERMOSTAT WITH SPECIFIED I/O FUNCTIONS

AFMA

AIR FLOW MEASUREMENT ARRAY,
WITH FLOW TRANSMITTER
SEE "DEVICE SYMBOL, GENERIC"

CONTROL SIGNAL LINE, LOW VOLTAGE

C — COIL, COOLING

DX — COIL, COOLING, DIRECT-EXPANSION

H — COIL, HEATING

PC — COIL, PRECOOL

PH — COIL, PREHEAT

FAN

FILTER

HUMIDIFIER

DAMPER, BALANCING

DAMPER, PARALLEL BLADE
NORMALLY OPEN OR CLOSED AS SHOWN

DAMPER, OPPOSED BLADE
NORMALLY OPEN OR CLOSED AS SHOWN

P — PRESSURE GAGE

T — TEMPERATURE GAGE

M# — MOTOR

MS — MOTOR STARTER

CT — CURRENT TRANSDUCER/SWITCH

FM — FLOW METER

VFD
XX-C
XX-S
XX-SS

VARIABLE FREQUENCY DRIVE
XX = PROCESS/DEVICE BEING CONTROLLED

SS = START/STOP COMMAND
S = STATUS FEEDBACK (ON/OFF)
C = 4-20 mA, VDC, or SNVT CONTROL SIGNAL

ACTUATOR, ELECTRIC

ABBREVIATIONS & ACRONYMS

2P	TWO-POSITION (CONTROL SIGNAL)
ADJ	ADJUSTABLE/ADJUSTMENT
AFMA	AIRFLOW MEASUREMENT ARRAY
AHU	AIR HANDLING UNIT
AI	ANALOG INPUT
ALM	ALARM
AO	ANALOG OUTPUT
ASD	ADJUSTABLE SPEED DRIVE
AVE	AVERAGE
BI	BINARY INPUT
BLDG	BUILDING
BLR	BOILER
BO	BINARY OUTPUT
BUT	BUTTON
BYP	BYPASS
C	COMMAND (MODULATING CONTROL SIGNAL)
CAP	CAPACITY
CF	CONDENSER FAN
CH	CHILLER
CHW	CHILLED WATER
CHWS	CHILLED WATER SUPPLY
CHWR	CHILLED WATER RETURN
CLD	CLOSED
CLG	COOLING
CO	CARBON MONOXIDE
CO2	CARBON DIOXIDE
COM	COMMON
COMP	COMPRESSOR
COV	CHANGE OF VALUE
CSR	CURRENT SENSING RELAY
CT	COOLING TOWER
CT	CURRENT TRANSFORMER/SWITCH
CTF	COOLING TOWER FAN
CWR	CONDENSER WATER RETURN
CWS	CONDENSER WATER SUPPLY
CW	CONDENSER WATER
D	DAMPER
DA	DISCHARGE AIR
DBD	DEADBAND
DDC	DIRECT DIGITAL CONTROL(LER)
DEC	DECOUPLER
DIFF	DIFFERENCE
DIS	DISABLE
DISP	DISPLAY
DPT	DEW POINT TEMPERATURE
DX	DIRECT EXPANSION (UNIT)
EA	EXHAUST AIR
ECM	ELECTRICALLY COMMUTATED MOTOR
ECO	ECONOMIZER
EF	EXHAUST FAN
EFF	EFFECTIVE
EMER	EMERGENCY
ENA	ENABLE
F	FLOW
FACP	FIRE ALARM CONTROL PANEL
F.L.	FAIL IN LAST POSITION
FLT	FILTER
GLY	GLYCOL
H2	HYDROGEN
HL	HIGH LIMIT
HTG	HEATING
HUM	HUMIDIFIER
HW	HOT WATER
HWR	HOT WATER RETURN
HWS	HOT WATER SUPPLY
HX	HEAT EXCHANGER
IO	INPUT/OUTPUT
ISO	ISOLATION
IR	INFRARED
L	LEVEL
LDP	LOCAL DISPLAY PANEL
LL	LOW LIMIT
LVG	LEAVING
M	MOTOR or MAIN
M&C	MONITORING & CONTROL (SOFTWARE)
MA	MIXED AIR
MINOA	MINIMUM OUTSIDE AIR
MOIST	MOISTURE
MS	MOTOR STARTER
MUW	MAKE-UP WATER
N/A	NOT APPLICABLE
N.C.	NORMALLY CLOSED
nci	NETWORK CONFIGURATION INPUT
N.O.	NORMALLY OPEN
NVI	NETWORK VARIABLE INPUT
NVO	NETWORK VARIABLE OUTPUT
OA	OUTSIDE AIR
OCC	OCCUPIED
OPN	OPEN
OVRD	OVERRIDE
OWS	OPERATOR WORKSTATION
P	PRESSURE
PC	PRE-COOLING
PH	PREHEAT
PHTG	PREHEATING
PID	PROPORTIONAL INTEGRAL DERIVATIVE (CONTROL)
PMP	PUMP
PP	POSITIVE POSITIONER
PR	PRIMARY
PWR	POWER
R	RELAY
RA	RETURN AIR
RE	RELIEF AIR
REF	RELIEF FAN
REQ	REQUIRED
RF	RETURN FAN
RH	RELATIVE HUMIDITY
RHTG	REHEATING
RM	ROOM
RQST	REQUEST
RST	RESET
S	STATUS
SA	SUPPLY AIR
SEC	SECONDARY
SF	SUPPLY FAN
SHUTDN	SHUTDOWN
SMK	SMOKE
SNVT	STANDARD NETWORK VARIABLE TYPE
SO	SHUT-OFF
SP	SETPOINT
SS	START/STOP COMMAND
STAT	THERMOSTAT
SYS	SYSTEM
SCHD	SCHEDULER
T	TEMPERATURE
TRB	TROUBLE
UNOCC	UNOCCUPIED
V	VALVE
VAV	VARIABLE AIR VOLUME
VFD	VARIABLE FREQUENCY DRIVE, SEE ASD
VIB	VIBRATION
WB	WET BULB (TEMPERATURE)
XFMR	TRANSFORMER
ZN	ZONE

"HVAC CONTROLS" GENERAL NOTES: SHEETS M-600 SERIES

1. THE CONTROL DIAGRAMS AND SCHEMATICS ILLUSTRATE THE FUNCTIONAL REQUIREMENTS AND CONTROL RELATIONSHIPS, ALL ACCESSORIES AND DEVICES MAY NOT BE SHOWN IN DETAIL.
2. THE SPECIFICATIONS SHOULD BE CONSULTED FOR DETAILED REQUIREMENTS.
3. BUILDING CONTROL SYSTEM SHALL BE COMPLETELY OPERATIONAL BEFORE BUILDING COMMISSIONING CAN TAKE PLACE.

"POINTS LIST SCHEDULE" GENERAL NOTES: SHEETS M-600 SERIES

1. CELLS WITH "<___>" SHALL BE DETERMINED BY THE CONTRACTOR
2. SPACES WHERE NO ENTRY IS REQUIRED CONTAIN " ~ "
3. AN ALARM PRIORITY OF CRITICAL (CRIT) INDICATES THAT THE ALARM SHALL REMAIN IN ALARM UNTIL ACKNOWLEDGED BY A SYSTEM OPERATOR AND UNTIL THE ALARM CONDITION NO LONGER EXISTS.
4. AN ALARM PRIORITY OF INFORMATIONAL (INFO) INDICATES THAT THE ALARM SHALL REMAIN IN ALARM UNTIL THE ALARM CONDITION NO LONGER EXISTS OR THE ALARM IS ACKNOWLEDGED.

GEORGIA REGISTERED PROFESSIONAL ENGINEER No. PE 031237 DANIEL FINKELSTEIN
06/26/2024

no.	date	by	ckd	description
0	6/26/24	AJC	DF	ISSUED FOR CONSTRUCTION

BURNS McDONNELL
4004 SUMMIT BLVD. NE, SUITE 1200
ATLANTA, GA 30319
770-587-4776
LICENSEE NO. PEF000100
AUTHORIZATION NO. J550903

date	detailed
04/12/24	A. CAULINEAU
designed	**checked**
D. FINKELSTEIN	D. OLSEN

Perry
HOUSTON COUNTY, GEORGIA

EAST PERRY WWTF
MECHANICAL CONTROLS LEGEND, ABBREVIATIONS AND GENERAL NOTES

project	contract
148538	

drawing 100M002 — rev. 0
sheet of sheets
file

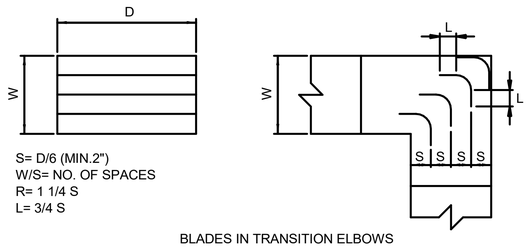

S= D/6 (MIN.2")
W/S= NO. OF SPACES
R= 1 1/4 S
L= 3/4 S

BLADES IN TRANSITION ELBOWS SHALL
BE DETERMINED ACCORDING TO SMALLEST WIDTH OF ELBOW.

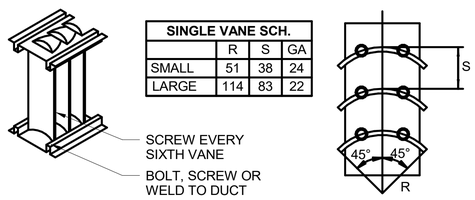

SINGLE VANE SCH.			
	R	S	GA
SMALL	51	38	24
LARGE	114	83	22

RECTANGULAR DUCT TURNING VANES (1)
NOT TO SCALE

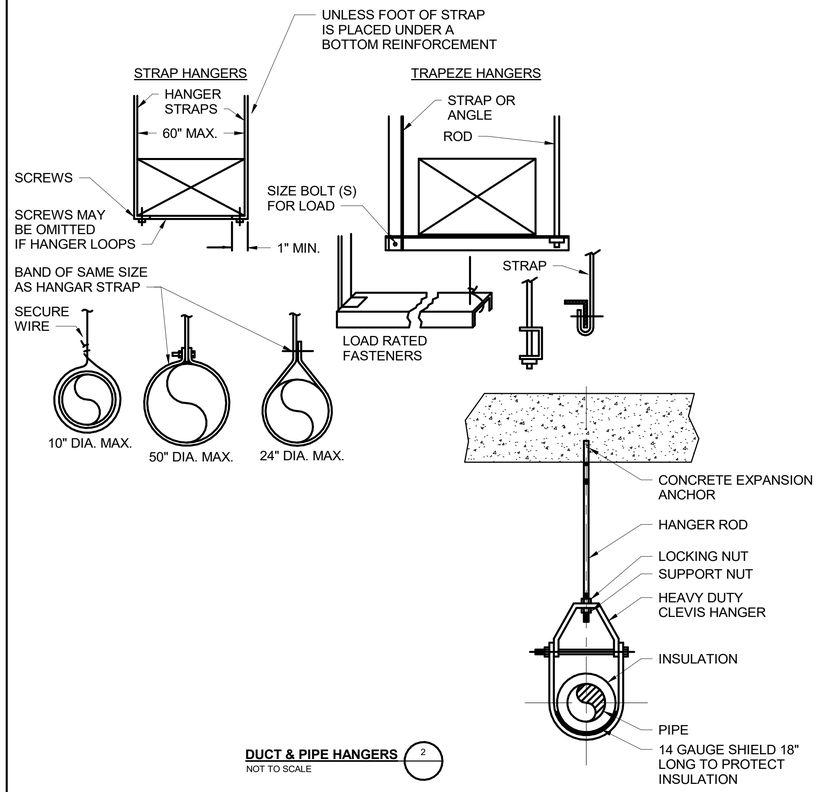

DUCT & PIPE HANGERS (2)
NOT TO SCALE

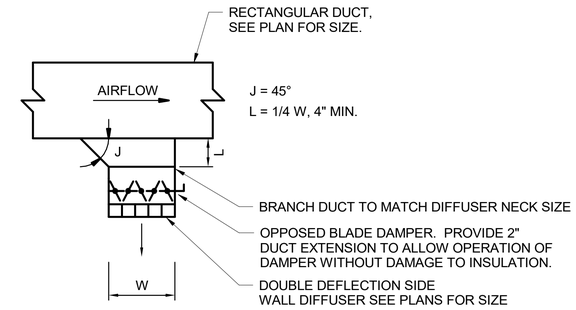

NOTES:

1. TAKEOFF ON BOTH SIDES OR SINGLE SIDE AS REQUIRED BY PLANS.
2. SEE SMACNA MANUAL FOR TAP-IN DETAILS.
3. WHEN FITTING HAS ONLY ONE SIDE SLOPED FOR A SINGLE SIDE TAKE-OFF, THE TAP-IN SHALL BE INSTALLED IN SLOPED SIDE.
4. CLINCH LOCK CONNECTION TO DUCT SHALL HAVE CORNER SEALS. (SEE SMACNA MANUAL).
5. EXTRACTORS, SCOOPS, DEFLECTORS OR DAMPERS THAT PROTRUDE INTO THE MAIN DUCT SHALL NOT BE USED. BALANCING DAMPERS SHALL BE LOCATED TO PREVENT PROTRUSION INTO THE MAIN DUCT AND TO PROVIDE STABLE AIR FLOW AND MINIMAL NOISE WHEN ADJUSTED.

RECTANGULAR DUCT SIDEWALL DIFFUSER (3)
NOT TO SCALE

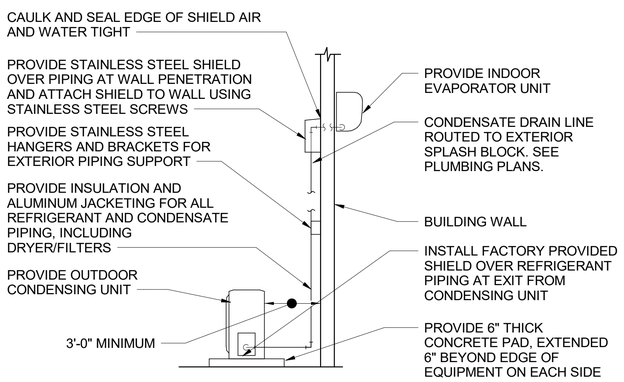

NOTES:

1. INSULATION SHALL BE PROVIDED FOR ALL EXPOSED REFRIGERANT PIPING INSIDE CONDENSING UNIT.

DUCTLESS SPLIT INSTALLATION DETAIL (4)

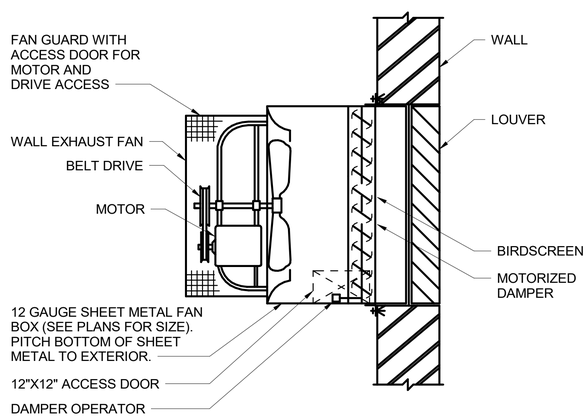

SIDEWALL PROPELLER FAN (5)
NOT TO SCALE

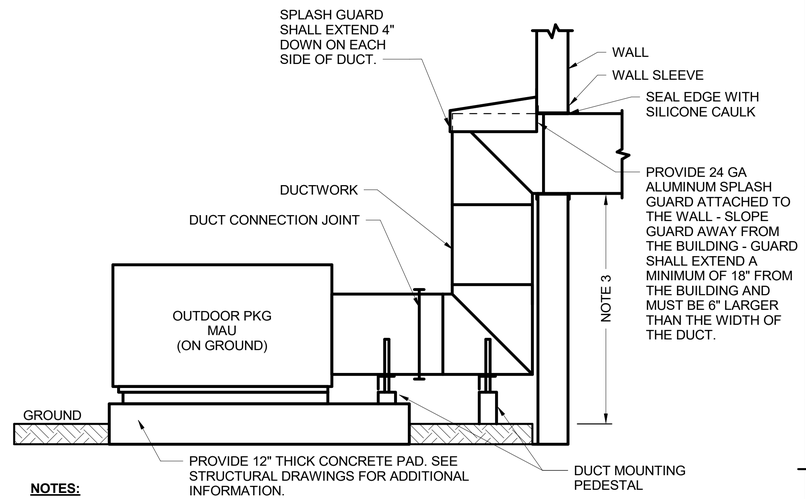

NOTES:

1. INSULATE ALL EXTERIOR DUCTWORK WITH 2" THICK, 4.75 PCF RIGID DUCTBOARD WITH VAPOR BARRIER AND FOIL SCRIM KRAFT JACKET WITH JOINTS AND SEAMS CONSTRUCTED IN ACCORDANCE WITH MANUFACTURER'S RECOMMENDATIONS.
2. PROVIDE 24 GA ALUMINUM JACKETING OVER EXTERIOR EXPOSED DUCTS OUTSIDE THE BUILDING. JACKETING SHALL MATCH BUILDING COLOR AND SHALL HAVE TEXTURED "STUCCO TYPE" FINISH.
3. REFER TO STRUCTURAL DRAWINGS FOR ELEVATION TO BOTTOM OF DUCT AND COORDINATION WITH BRACING.

EXTERIOR DUCT INSTALLATION - PROCESS BLDG MAKEUP AIR UNIT (6)
NOT TO SCALE

GEORGIA REGISTERED No. PE 031237 PROFESSIONAL ENGINEER DANIEL FINKELSTEIN
06/26/2024

no.	date	by	ckd	description
0	6/26/24	AJC	DF	ISSUED FOR CONSTRUCTION

BURNS McDONNELL
4004 SUMMIT BLVD. NE, SUITE 1200
ATLANTA, GA 30319
770-587-4776
LICENSEE NO. PEF000100
AUTHORIZATION NO. J550903

date	detailed
04/12/24	A. CAULINEAU
designed	**checked**
D. FINKELSTEIN	D. OLSEN

Perry
HOUSTON COUNTY, GEORGIA

EAST PERRY WWTF
MECHANICAL DETAILS

project	contract
148538	

drawing 100M501 — rev. 0
sheet of sheets
file

MAKEUP AIR UNIT SCHEDULE (MAU)

TAG NO.	BUILDING	DISCHARGE ORIENTATION	APPROX WEIGHT (LBS)	SUPPLY FAN				HEATING COIL		FILTER			ELECTRICAL			BASIS OF DESIGN		NOTES
				DRIVE	AIRFLOW (CFM)	EXT STATIC PRESSURE (IN. W.C.)	MOTOR NAMPLATE HP	KW	AMBIENT WINTER DB (°F)	STYLE	DEPTH (IN)	FILTER MERV	V/PH/HZ	MIN CIRCUIT AMPACITY (MCA)	MAX OVERCURRENT PROTECTION (MOCP)	MANUFACTURER	MODEL	
MAU-01	PROCESS	HORIZONTAL	1131	DIRECT	2200 CFM	1.5	1.5	20	28	FLAT	2	8	460/3/60	35.3	40	GREENHECK	MSX-P116-H12-D1	1, 2, 3

NOTES:
1. PROVIDE WITH FACTORY VFD
2. PROVIDE WITH MERV 8 FILTERS
3. PROVIDE MANUFACTURER'S INDUSTRIAL/REMOTE CONTROL PANEL

FAN SCHEDULE

TAG NO.	BUILDING	AREA SERVED	TYPE	DRIVE TYPE	AIRFLOW (LOW/HIGH) (CFM)	EXT STATIC PRESS (IN WC)	FAN SPEED RPM	MAX MOTOR HP	WEIGHT (LBS)	ELECTRICAL V/PH/HZ	INTERLOCK	BASIS OF DESIGN		NOTES
												MANUFACTURER	MODEL	
EF-01	PROCESS	LOWER LEVEL BLOWER ROOM	INLINE	DIRECT	2,200	0.5	1,384	1	92	120/60/1	MAU-01, LV-01	GREENHECK	SQ-15-VG	1,2,3,4
EF-02	PROCESS	UPPER LEVEL PUMP ROOM	PROPELLER	DIRECT	2,100	0.5	1,361	1/2	199	120/60/1	LV-02, LV-03	GREENHECK	AER-20-VG	3, 4, 5
EF-03	SOLIDS HANDLING	FILTER LEVEL	PROPELLER	DIRECT	1,500	1.0	1,652	3/4	192	120/60/1	LV-04. LV-05	GREENHECK	AER-24-VG	3, 4, 5
EF-04	SOLIDS HANDLING	FILTER LEVEL	PROPELLER	DIRECT	1,500	1.0	1,652	3/4	192	120/60/1	LV-04, LV-06	GREENHECK	AER-24-VG	3, 4, 5

NOTES:
1. PROVIDE WITH FACTORY STARTER
2. INTERLOCK FAN WITH MAU-01
3 PROVIDE WITH MOTORIZED DAMPER AND BIRDSCREEN
4 PROVIDE WITH MOTOR GUARD AND WALL HOUSING
5. PROVIDE FACTORY MOUNTED SINGLE POINT POWER CONNECTION AND DISCONNECT

LOUVER SCHEDULE (LV)

TAG NO.	BUILDING	AREA SERVED	QUANTITY	WIDTH	HEIGHT	FLOW DIRECTION	AIRFLOW (CFM)	MIN. FREE AREA (%)	MAX FREE AREA VELOCITY (FT/MIN)	PRESSURE DROP (IN W.C.)	BASIS OF DESIGN		NOTES
											MANUFACTURER	MODEL	
LV-01	PROCESS	LOWER LEVEL	1	30	24	EXHAUST	2,200	57	1,000	0.08	RUSKIN	ELF6375DXH	1, 2
LV-02	PROCESS	UPPER LEVEL	1	30	24	EXHAUST	2,100	57	1,000	0.08	RUSKIN	ELF6375DXH	1, 3
LV-03	PROCESS	UPPER LEVEL	1	48	48	INTAKE	6,000	57	750	0.08	RUSKIN	ELF6375DXH	1, 6
LV-04	SOLIDS HANDLING	FILTER LEVEL	1	48	24	INTAKE	3,000	57	750	0.08	RUSKIN	ELF6375DXH	1, 6
LV-05	SOLIDS HANDLING	FILTER LEVEL	1	24	24	EXHAUST	1,500	57	1,000	0.08	RUSKIN	ELF6375DXH	1, 4
LV-06	SOLIDS HANDLING	FILTER LEVEL	1	24	24	EXHAUST	1,500	57	1,000	0.08	RUSKIN	ELF6375DXH	1, 5

NOTES:
1. SEE ARCHITECTURAL DRAWINGS FOR ADDITIONAL DETAILS.

DUCTLESS SPLIT SYSTEM SCHEDULE (DSS)

TAG-INSIDE UNIT	TAG-OUTSIDE UNIT	BUILDING	AREA SERVED	DESIGN AIRFLOW (CFM)	COOLING COIL			HEATING COIL		BASIS OF DESIGN		TYPE	Electrical - V/PH/HZ	WEIGHT INDOOR UNIT (LBS)	NOTES
					TOTAL CAPACITY (BTUH)	EAT		CAPACITY (BTUH)	EAT (DB) (DEG. F)	MANUFACTURER	MODEL INDOOR/OUTDOOR				
						DB (DEG. F)	WB (DEG. F)								
DSS-01	HP-01	PROCESS	ELECTRICAL RM	775	30,000	80	67	18,100	70	MITSUBISHI	PKA-A30 / PUZ-A30	WALL MOUNT	208/1/60	56	1, 2, 3
DSS-02	HP-02	SOLIDS HANDLING	ELECTRICAL RM	775	30,000	80	67	18,100	70	MITSUBISHI	PKA-A30 / PUZ-A30	WALL MOUNT	208/1/60	56	1, 2, 3

NOTES:
1. INDOOR UNIT (DSS) POWERED THROUGH OUTDOOR UNIT (HP). VERIFY WITH FINAL SELECTION AND COORDINATE WITH ELECTRICAL SUBCONTRACTOR.
2. PROVIDE WITH CONDENSATE PUMP
3 PROVIDE WITH MANUFACTURER'S PROGRAMMABLE THERMOSTAT.

DIFFUSER, REGISTER, & GRILLE SCHEDULE (DRG)

TYPE	DESCRIPTION	FACE SIZE	DAMPER	MOUNTING	BLADE DESIGN			MATERIAL	BASIS OF DESIGN		NOTES
					BLADE SPACING (IN)	DEFLECTION			NAME	MODEL	
						TYPE	ANGLE				
SEG	EXHAUST GRILLE	SEE DRAWINGS	OBD	DUCT	3/4"						1, 2, 3
SSD	DOUBLE DEFLECTION SUPPLY GRILLE	SEE DRAWINGS	OBD	DUCT	3/4"	HORIZONTAL	22.5°	ALUMINUM	TITUS	300FL	1, 2, 3
						HORIZONTAL	35	ALUMINUM	TITUS	350FL	

NOTES:
1. WHERE NOT NOTED, BRANCH DUCT SIZE SHALL BE THE SAME AS THE DIFFUSER NECK SIZE.
2. PROVIDE WITH INTEGRAL OPPOSED BLADE DAMPER.
3. PROVIDE WITH PAINTABLE MILL FINISH.

ELECTRIC UNIT HEATER SCHEDULE (UH)

TAG	LOCATION	ORIENTATION	MOUNTING HEIGHT (FT - IN)	AIRFLOW (CFM)	CAPACITY KW)	MOTOR SIZE (HP)	ELECTRICAL		BASIS OF DESIGN		WEIGHT (LBS)	NOTES
							VOLTS	PHASE	MANUFACTURER	MODEL		
UH-1	SOLIDS HANDLING BLDG	HORIZONTAL	9' -0"	830	10	1/15	480	3	MODINE	HER100	67	1, 2
UH-2	SOLIDS HANDLING BLDG	HORIZONTAL	9' -0"	830	10	1/15	480	3	MODINE	HER100	67	1, 2
UH-3	SOLIDS HANDLING BLDG	HORIZONTAL	9' -0"	830	10	1/15	480	3	MODINE	HER100	67	1, 2

NOTES:
1. PROVIDE UNIT MOUNTED THERMOSTAT.
2. PROVIDE FACTORY MOUNTED SINGLE POINT POWER CONNECTION AND DISCONNECT.

GEORGIA REGISTERED No. PE 031237 PROFESSIONAL ENGINEER DANIEL FINKELSTEIN

06/26/2024

no.	date	by	ckd	description
0	6/26/24	AJC	DF	ISSUED FOR CONSTRUCTION

BURNS McDONNELL
4004 SUMMIT BLVD. NE, SUITE 1200
ATLANTA, GA 30319
770-587-4776
LICENSEE NO. PEF000100
AUTHORIZATION NO. J550903

date 04/12/24
detailed A. CAULINEAU
designed D. FINKELSTEIN
checked D. OLSEN

Perry
HOUSTON COUNTY, GEORGIA

EAST PERRY WWTF
MECHANICAL SCHEDULES

project 148538
contract
drawing 100M601 — rev. 0
sheet of sheets
file 148538_M_SCHEDULES_2022.rvt

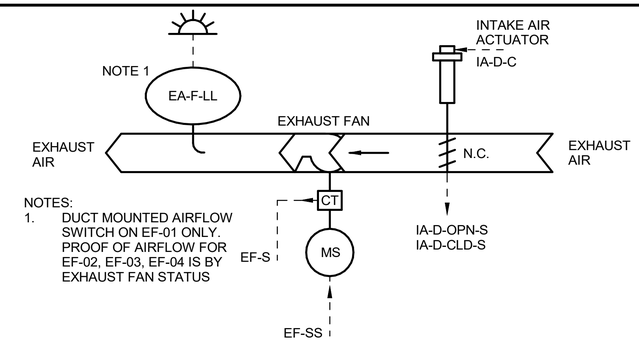

NOTES:
1. DUCT MOUNTED AIRFLOW SWITCH ON EF-01 ONLY. PROOF OF AIRFLOW FOR EF-02, EF-03, EF-04 IS BY EXHAUST FAN STATUS

INTERLOCKS	
EF-01	MAU-01, LV-01
EF-02	LV-02, LV-03
EF-03	LV-04, LV-05
EF-04	LV-04, LV-06

SEQUENCE OF OPERATION:

GENERAL:
THE HVAC SYSTEM SHALL HAVE THE FOLLOWING MODES OF OPERATION: OFF AND ON. IN GENERAL, PER CODE, THE FANS SHALL ALWAYS BE ON AND MOTORIZED DAMPERS OPEN. THE HVAC SYSTEM SHALL COMMUNICATE WITH AND BE CONTROLED BY THE PLANT CONTROL SYSTEM

OFF:
THE EXHAUST FAN SHALL BE DE-ENERGIZED. INTAKE AND EXHAUST DAMPERS SHALL BE CLOSED.

ON:
THE INTAKE AND EXHAUST DAMPERS SHALL OPEN. ONCE THE DAMPERS ARE PROVEN OPEN THE EXHAUST FAN SHALL BE ENERGIZED AND RUN CONTINUOUSLY.

ALARMS:
PROOF OF FLOW (INLINE EXHAUST FANS): IF FLOW IS PROVEN VIA THE AIRFLOW SWITCH THE INDICATOR LIGHT SHALL BE ILLUMINATED. IF PROOF OF FLOW DOES NOT EXIST AN ALARM SHALL BE SENT TO THE HVAC CONTROL PANEL.THE HVAC CONTROL PANEL SHALL COMMUNICATE WITH THE PLANT CONTROL SYSTEM VIA AN ETHERNET CONNECTION.

PROOF OF FLOW (WALL MOUNTED EXHAUST FANS): PROOF OF FLOW IS VIA THE EXHAUST FAN MOTOR CIRCUIT TRANSDUCER. IF AIRFLOW DOES NOT EXIST AN ALARM SHALL BE SENT TO THE HVAC CONTROL PANEL.THE HVAC CONTROL PANEL SHALL COMMUNICATE WITH THE PLANT CONTROL SYSTEM VIA AN ETHERNET CONNECTION.

FUNCTION	NAME	DESCRIPTION	SETTING (WITH UNITS)	RANGE (WITH UNITS)	IO TYPE	HOA REQ'D	LDP AND M&C DISPLAY: LDP VIEW REQ'D	M&C DISP REQ'D	M&C TREND REQ'D	OVERRIDES: LDP OVRD REQ'D	M&C OVRD REQ'D	ALARMS: ALARM CONDITION (SEE NOTES)	ALARM PRIORITY
PROOFS	IA-D-OPN-S	INTAKE AIR DAMPER OPEN STATUS	~	OPEN/FALSE	BI	~	X	X	~	~	~	DAMPER COMMANDED OPEN BUT STATUS CLOSED	CRIT
	IA-D-CLD-S	INTAKE AIR DAMPER CLOSED STATUS	~	CLOSED/FALSE	BI	~	X	X	~	~	~	DAMPER COMMANDED CLOSED BUT STATUS OPEN	CRIT
START/STOP	SYS-ON	ON INPUT (FROM INTERLOCKED UNIT)	~	<___>	NVI	~	X	X	~	X	X	~	~
	IA-D-C	INTAKE AIR DAMPER COMMAND	~	OPEN/CLOSED	BO	X	X	X	~	~	~	~	~
	EF-SS	EXHAUST FAN START/STOP	~	ON/OFF	BO	X	X	X	~	X	X	~	~
MONITORING	EF-S	EXHAUST FAN STATUS	~	ON/OFF	BI	~	~	X	X	~	~	~	~
	EA-F-LL	EXHAUST AIR FLOW LOW LIMIT SWITCH	~	ALM/NORMAL	BI	~	X	X	~	~	~	*AIR VELOCITY BELOW SETTING	CRIT

Notes:
1) THE CONTRACTOR SHALL COMPLETE THE POINTS SCHEDULE AS SPECIFIED AND AS DESCRIBED IN THE GENERAL POINTS SCHEDULE NOTES ON THE CONTROLS LEGEND DRAWING.
2) THE CONTRACTOR SHALL PROVIDE A POINTS SCHEDULE INCLUDING ALL COLUMNS SHOWN AS WELL AS ALL ADDITIONAL COLUMNS DESCRIBED IN PART 3 OF SPECIFICATION SECTION 23 09 00.
3) UNIT MANUFACTURERS PROOFS AND SAFETIES: THE CONTRACTOR SHALL SHOW EACH PROOF AND SAFETY AS A SEPARATE ROW.

1 CONTINUOUSLY OPERATED EXHAUST FAN SCHEMATIC, SEQUENCE, & POINTS SCHEDULE
SCALE: NTS

GEORGIA REGISTERED No. PE 031237 PROFESSIONAL ENGINEER DANIEL FINKELSTEIN
06/26/2024

no.	date	by	ckd	description
0	6/26/24	AJC	DF	ISSUED FOR CONSTRUCTION

BURNS McDONNELL
4004 SUMMIT BLVD. NE, SUITE 1200
ATLANTA, GA 30319
770-587-4776
LICENSEE NO. PEF000100
AUTHORIZATION NO. J550903

date	detailed
04/12/24	A. CAULINEAU
designed	**checked**
D. FINKELSTEIN	

Perry
HOUSTON COUNTY, GEORGIA

EAST PERRY WWTF
MECHANICAL CONTROLS

project	contract
148538	

drawing 100M602 – rev. 0
sheet of sheets
file 148538_M_SCHEDULES_2022.rvt

no.	date	by	ckd	description
0	6/26/24	AJC	DF	ISSUED FOR CONSTRUCTION

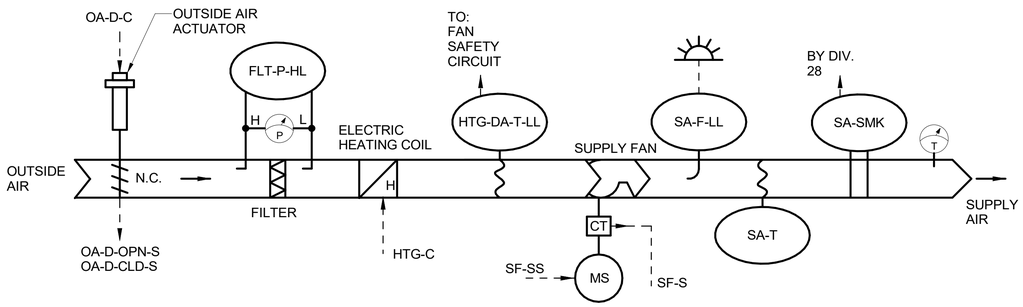

SEQUENCE OF OPERATION:

GENERAL:
THE HVAC SYSTEM SHALL HAVE THE FOLLOWING MODES OF OPERATION: OFF AND ON. IN GENERAL, PER CODE, THE MAU SHALL ALWAYS BE ON AND MOTORIZED DAMPERS OPEN.. THE HVAC SYSTEM SHALL COMMUNICATE WITH AND BE CONTROLED BY THE PLANT CONTROL SYSTEM

OFF:
THE MAU SUPPLY FAN SHALL BE DE-ENERGIZED. HEATING COIL SHALL BE DE-ENERGIZED. OUTSIDE AIR DAMPER SHALL BE CLOSED, EXHAUST FAN WILL BE OFF..

ON:
ON MODE SHALL BE INITIATED BY THE CONTROLS SYSTEM. THE MAU AND INTERLOCKED EXHAUST FAN SHALL RUN CONTINUOUSLY.

DAMPER CONTROL: THE OUTSIDE AIR DAMPER AND EXHAUST DAMPER SHALL BE OPEN.

FAN CONTROL: THE SUPPLY FAN SHALL BE ENERGIZED AND RUN AT A CONSTANT SPEED.

TEMPERATURE CONTROL: UPON A FALL IN SUPPLY AIR TEMPERATURE BELOW HEATING SETPOINT THE HEATING COIL SHALL ENERGIZE TO MAINTAIN SUPPLY AIR TEMPERATURE SETPOINT.

FILTER MONITORING: IF THE PRESSURE DROP ACROSS A FILTER EXCEEDS THE ALARM SETPOINT AN ALARM SHALL BE SENT TO THE DDC SYSTEM INDICATING WHICH FILTER NEEDS TO BE CHANGED.

SAFETY CONTROLS:
SMOKE DETECTOR: IF THE SUPPLY AIR SMOKE DETECTOR SENSES SMOKE IN THE DUCTWORK, THE SUPPLY FAN SHALL BE DIABLED, AN ALARM SHALL BE SENT TO THE DDC SYSTEM AND THE UNIT SHALL GO INTO OFF MODE.

ALARMS:
PROOF OF FLOW: IF FLOW IS PROVEN VIA THE AIRFLOW SWITCH THE INDICATOR LIGHT SHALL BE ILLUMINATED. IF PROOF OF FLOW DOES NOT EXIST AN ALARM SHALL BE SENT TO THE HVAC CONTROL PANEL. THE HVAC CONTROL PANEL SHALL COMMUNICATE WITH THE PLANT CONTROL SYSTEM VIA AN ETHERNET CONNECTION.

FUNCTION	NAME	DESCRIPTION	SETTING (WITH UNITS)	RANGE (WITH UNITS)	IO TYPE	HOA REQ'D	LDP AND M&C DISPLAY: LDP VIEW REQ'D	M&C: DISP REQ'D	M&C: TREND REQ'D	OVERRIDES: LDP OVRD REQ'D	M&C OVRD REQ'D	ALARMS: ALARM CONDITION (SEE NOTES)	ALARM PRIORITY
PROOFS & SAFETIES	SF-S	SUPPLY FAN STATUS	~	ON/OFF	BI	~	X	X	~	~	~	SUPPLY FAN PROOF FAILED	CRIT
	OA-D-OPN-S	OUTSIDE AIR DAMPER OPEN STATUS	~	OPEN/FALSE	BI	~	X	X	~	~	~	DAMPER COMMANDED OPEN BUT STATUS CLOSED	CRIT
	OA-D-CLD-S	OUTSIDE AIR DAMPER CLOSED STATUS	~	CLOSED/FALSE	BI	~	X	X	~	~	~	DAMPER COMMANDED CLOSED BUT STATUS OPEN	CRIT
	SA-SMK	SUPPLY AIR SMOKE	~	ALM/NORMAL	BI	~	~	~	~	~	~	ALM	CRIT
	SA-F-LL	SUPPLY AIR FLOW LOW LIMIT SWITCH	~	ALM/NORMAL	BI	~	X	X	~	~	~	*AIR VELOCITY BELOW SETTING	CRIT
START / STOP	SYS-ON	ON INPUT (FROM SYSTEM SCHEDULER)		<___>	NVI	~	X	X	~	SEE NOTES		~	~
	SF-SS	SUPPLY FAN START/STOP	~	ON/OFF	BO	X	X	X	~	X	X	~	~
	OA-D-C	OUTSIDE AIR DAMPER COMMAND	~	OPEN/CLOSED	BO	X	X	X	~	X	X	~	~
TEMPERATURE CONTROL	SA-T	SUPPLY AIR TEMPERATURE**	~	<___>	AI	~	X	X	X	~	~	** SA-T 5 DEG F LESS THAN SA-T-SP	INFO
	SA-T-SP	ZONE TEMPERATURE SETPOINT	55 DEG	~	~	~	~	X	~	X	X	~	~
	HTG-C	HEATING COIL COMMAND	~	0-100% OPEN	AO	~	~	X	~	X	X	~	~
OTHER POINTS	FLT-P-HL	FILTER PRESSURE HIGH LIMIT SWITCH	1 IN. WG.	ALM/NORMAL	BI	~	~	~	~	~	~	TRUE	INFO

NOTES:
1) THE CONTRACTOR SHALL COMPLETE THE POINTS SCHEDULE AS SPECIFIED AND AS DESCRIBED IN THE GENERAL POINTS SCHEDULE NOTES ON THE CONTROLS LEGEND DRAWING.
2) THE CONTRACTOR SHALL PROVIDE A POINTS SCHEDULE INCLUDING ALL COLUMNS SHOWN AS WELL AS ALL ADDITIONAL COLUMNS DESCRIBED IN PART 3 OF SPECIFICATION SECTION 23 09 00.
3) UNIT MANUFACTURERS PROOFS AND SAFETIES: THE CONTRACTOR SHALL SHOW EACH PROOF AND SAFETY AS A SEPARATE ROW.
4) SYS-ON: OVERRIDE OF SYS-ON IS ACCOMPLISHED THROUGH THE SYSTEM SCHEDULER.
5) ALARM CONDITIONS MARKED WITH AN ASTERISK (*) SHALL BE ACTIVE ONLY WHEN THE SYSTEM IS IN OCCUPIED MODE AND HAS BEEN IN OCCUPIED MODE FOR MORE THAN: * = 5 MINUTES ** = 30 MINUTES

1 MAKE-UP AIR UNIT CONTROL SCHEMATIC,SEQUENCE, & POINTS SCHEDULE
SCALE: NTS

GEORGIA REGISTERED No. PE 031237 PROFESSIONAL ENGINEER DANIEL FINKELSTEIN
06/26/2024

BURNS McDONNELL
4004 SUMMIT BLVD. NE, SUITE 1200
ATLANTA, GA 30319
770-587-4776
LICENSEE NO. PEF000100
AUTHORIZATION NO. J550903

date 04/12/24 | detailed A. CAULINEAU
designed D. FINKELSTEIN | checked D. OLSEN

Perry
HOUSTON COUNTY, GEORGIA

EAST PERRY WWTF
MECHANICAL CONTROLS

project 148538 | contract
drawing **100M603** – rev. **0**
sheet of sheets
file 148538_M_SCHEDULES_2022.rvt

NOTES:

1. FOR GENERAL NOTES, SYMBOLS, AND ABBREVIAITONS SEE DRAWING 100M001.
2. PROVIDE A MANUAL BALANCING DAMPER FOR EACH SUPPLY DIFFUSER.
3. MOUNT DUCT AS HIGH AS POSSIBLE IN MECHANICAL ROOM, AND COORDINATE ROUTING AND HEIGHT WITH OTHER TRADES THROUGHOUT PLENUM.
4. DUCT DIMENSIONS INDICATED REFER TO AIR OPENING DIMENSIONS. SHEET METAL SIZE WILL BE AIR OPENING DIMENSION PLUS THE THICKNESS OF ACCOUSTICAL LINER WHERE LINER IS INSTALLED. WHERE LINER IS NOT INSTALLED, AIR OPENING SIZE AND SHEET METAL SIZE ARE THE SAME.
5. CONTRACTOR TO COORDINATE DUCT ROUTING TO ELIMINATE INTERFERENCES WITH PIPING, LIGHTING AND OTHER EQUIPMENT.
6. AT FLOOR PENETRATION, PROVIDE APPROVED NON COMBUSTIBLE MATERIAL THAT RESISTS THE FREE PASSAGE OF FLAME AND THE PRODUCTS OF COMBUSTION AROUND THE ANNULAR SPACE OF THE PENETRATING DUCT.
7. PROVIDE AIRFLOW MONITORING DEVICES ON MAU-01 SUPPLY DUCT AND AND EF-01 EXHAUST DUCT IN ACCORDANCE WITH NFPA 820. CONNECT AIRFLOW MONITORING DEVICES TO ALARM SYSTEM.
8. PROVIDE BOTH VISIBLE AND AUDIBLE ALARMS AT BUILDING ENTRANCE IN ACCORDANCE WITH NFPA 820 TO ALERT PERSONNEL TO FAILURE OF VENTILATION SYSTEMS.

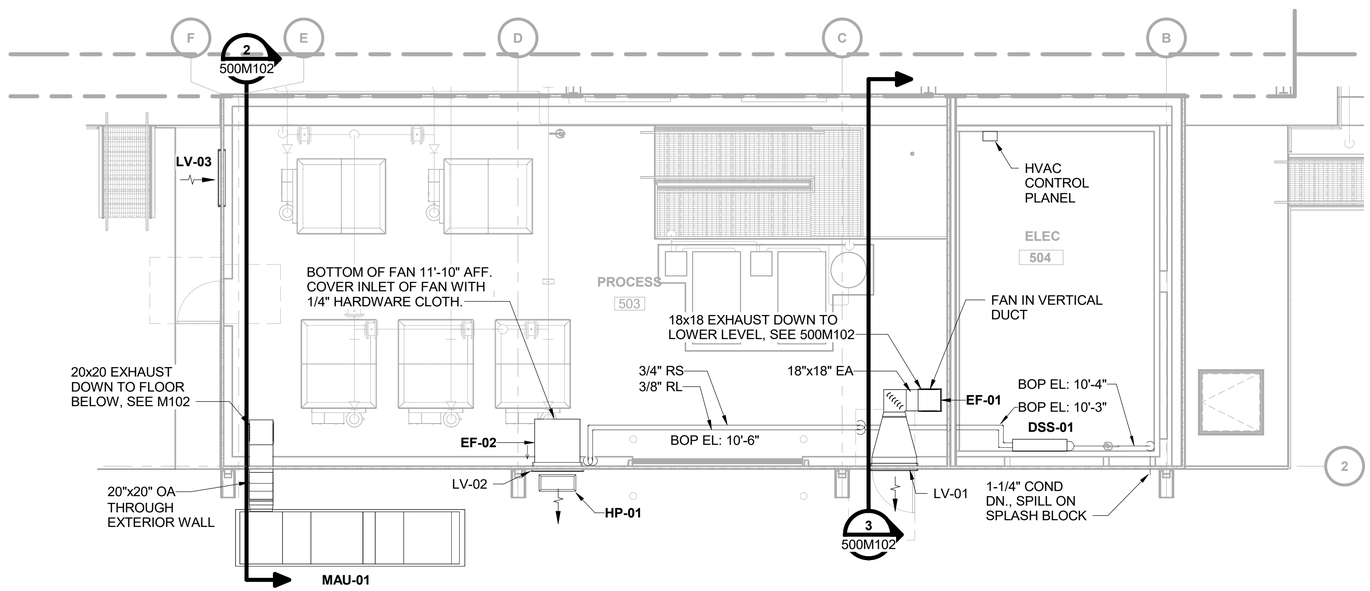

PROCESS BUILDING - UPPER LEVEL PLAN

0 4' 8' 12'
SCALE IN FEET

NORTH

no.	date	by	ckd	description
0	6/26/24	AJC	DF	ISSUED FOR CONSTRUCTION

BURNS McDONNELL
4004 SUMMIT BLVD. NE, SUITE 1200
ATLANTA, GA 30319
770-587-4776
LICENSEE NO. PEF000100
AUTHORIZATION NO. J550903

date	detailed
04/12/24	A. CAULINEAU
designed	**checked**
D. FINKELSTEIN	D. OLSEN

Perry

HOUSTON COUNTY, GEORGIA

EAST PERRY WWTF
PROCESS BUILDING - UPPER LEVEL PLAN

project	contract
148538	

drawing 500M101 – **rev.** 0

sheet **of** **sheets**

file

GEORGIA REGISTERED No. PE 031237 PROFESSIONAL ENGINEER DANIEL FINKELSTEIN

06/26/2024

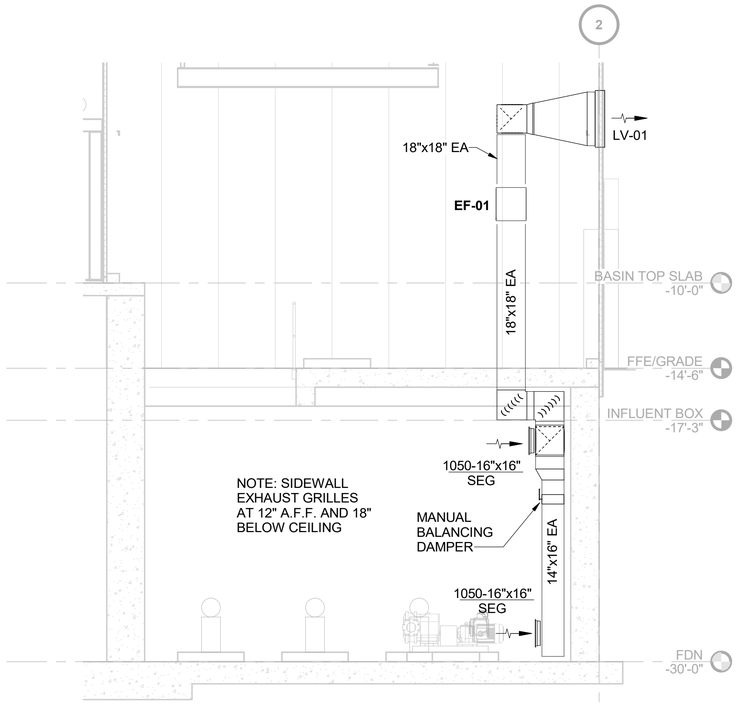

EF-01 SECTION - COLUMN "C"

0 2' 10' 20'
SCALE IN FEET

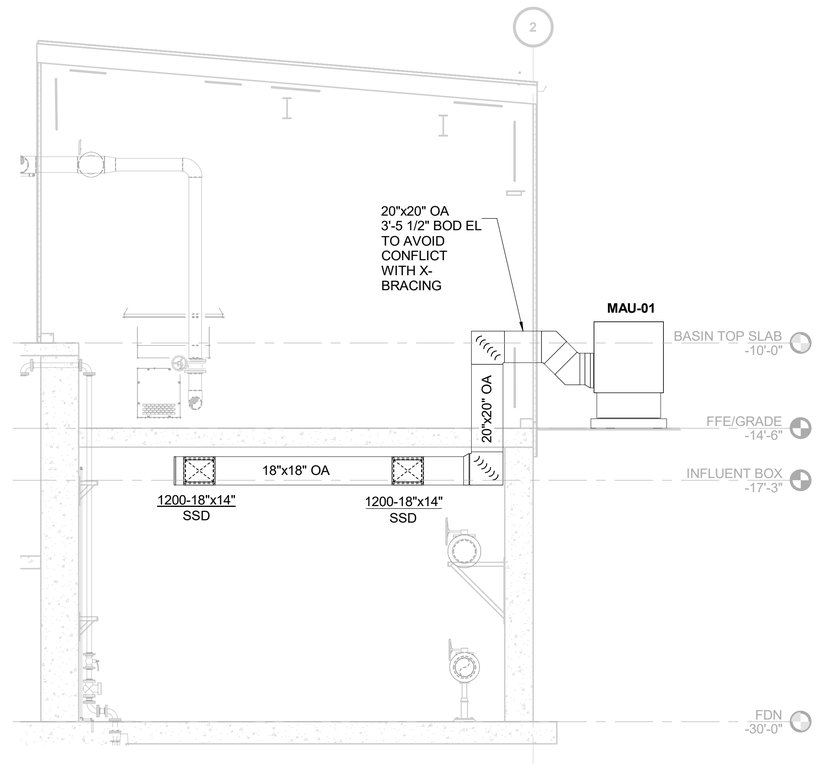

MAU-01 SECTION - COLUMN LINE "E"

0 2' 10' 20'
SCALE IN FEET

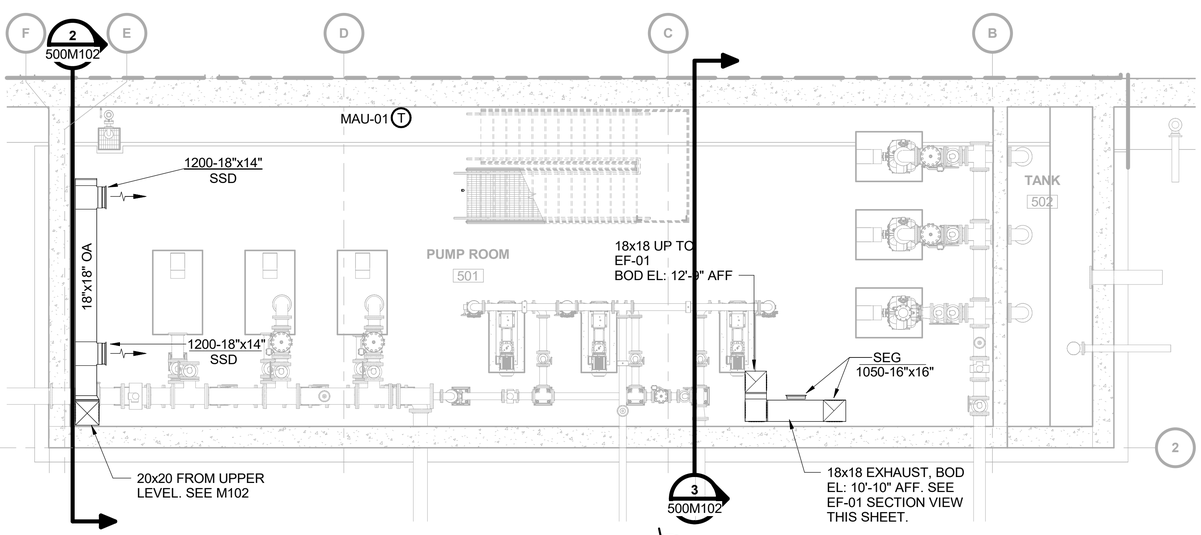

PROCESS BUILDING - LOWER LEVEL PLAN

0 4' 8' 12'
SCALE IN FEET

NORTH

NOTES:

1. FOR GENERAL NOTES, SYMBOLS, AND ABBREVIAITONS SEE DRAWING 100M001.
2. PROVIDE A MANUAL BALANCING DAMPER FOR EACH SUPPLY DIFFUSER.
3. MOUNT DUCT AS HIGH AS POSSIBLE IN MECHANICAL ROOM, AND COORDINATE ROUTING AND HEIGHT WITH OTHER TRADES THROUGHOUT PLENUM.
4. DUCT DIMENSIONS INDICATED REFER TO AIR OPENING DIMENSIONS. SHEET METAL SIZE WILL BE AIR OPENING DIMENSION PLUS THE THICKNESS OF ACCOUSTICAL LINER WHERE LINER IS INSTALLED. WHERE LINER IS NOT INSTALLED, AIR OPENING SIZE AND SHEET METAL SIZE ARE THE SAME.
5. CONTRACTOR TO COORDINATE DUCT ROUTING TO ELIMINATE INTERFERENCES WITH PIPING, LIGHTING AND OTHER EQUIPMENT.
6. AT FLOOR PENETRATION, PROVIDE APPROVED NON COMBUSTIBLE MATERIAL THAT RESISTS THE FREE PASSAGE OF FLAME AND THE PRODUCTS OF COMBUSTION AROUND THE ANNULAR SPACE OF THE PENETRATING DUCT.
7. PROVIDE AIRFLOW MONITORING DEVICES ON MAU-01 SUPPLY DUCT AND AND EF-01 EXHAUST DUCT IN ACCORDANCE WITH NFPA 820. CONNECT AIRFLOW MONITORING DEVICES TO ALARM SYSTEM.
8. PROVIDE BOTH VISIBLE AND AUDIBLE ALARMS AT BUILDING ENTRANCE IN ACCORDANCE WITH NFPA 820 TO ALERT PERSONNEL TO FAILURE OF VENTILATION SYSTEMS.

no.	date	by	ckd	description
0	6/26/24	AJC	DF	ISSUED FOR CONSTRUCTION

GEORGIA REGISTERED No. PE 031237 PROFESSIONAL ENGINEER DANIEL FINKELSTEIN

06/26/2024

BURNS McDONNELL
4004 SUMMIT BLVD. NE, SUITE 1200
ATLANTA, GA 30319
770-587-4776
LICENSEE NO. PEF000100
AUTHORIZATION NO. J550903

date	detailed
04/12/24	A. CAULINEAU
designed	**checked**
D. FINKELSTEIN	D. OLSEN

Perry

HOUSTON COUNTY, GEORGIA

EAST PERRY WWTF

PROCESS BUILDING - LOWER LEVEL PLAN

project	contract
148538	

drawing **500M102** — rev. **0**

sheet of sheets

file

no.	date	by	ckd	description
0	6/26/24	AJC	DF	ISSUED FOR CONSTRUCTION

NOTES:

1. FOR GENERAL NOTES, SYMBOLS, AND ABBREVIAITONS SEE DRAWING 100M001.
2. PROVIDE AIRFLOW OR MOTOR STATUS MONITORING DEVICES ON EF-03 AND EF-04 IN ACCORDANCE WITH NFPA 820. CONNECT MONITORING DEVICES TO ALARM SYSTEM.
3. PROVIDE BOTH VISIBLE AND AUDIBLE ALARMS AT BUILDING ENTRANCE IN ACCORDANCE WITH NFPA 820 TO ALERT PERSONNEL TO FAILURE OF VENTILATION SYSTEMS.
4. SUSPEND UNIT HEATERS FROM BUILDING STRUCTURE.

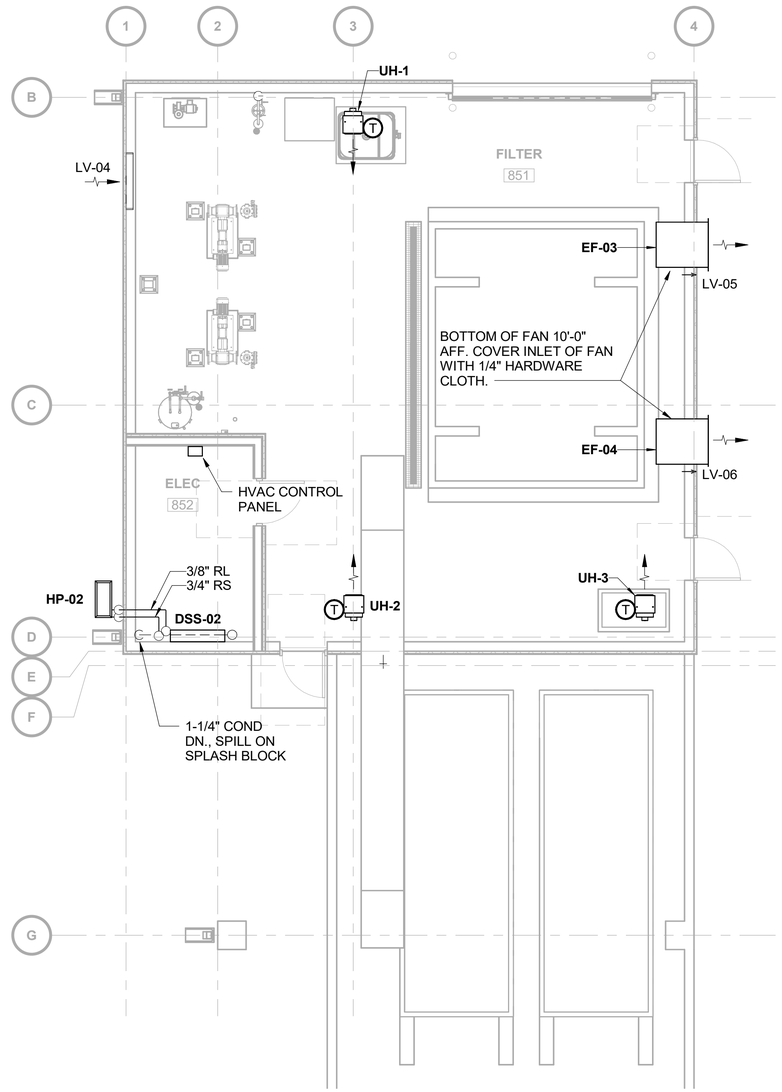

MECHANICAL PLAN

0 4' 8' 12'
SCALE IN FEET

NORTH

GEORGIA REGISTERED No. PE 031237 PROFESSIONAL ENGINEER DANIEL FINKELSTEIN

06/26/2024

BURNS McDONNELL
4004 SUMMIT BLVD. NE, SUITE 1200
ATLANTA, GA 30319
770-587-4776
LICENSEE NO. PEF000100
AUTHORIZATION NO. J550903

date	detailed
04/12/24	A. CAULINEAU
designed	**checked**
D. FINKELSTEIN	D, OLSEN

Perry

HOUSTON COUNTY, GEORGIA

EAST PERRY WWTF

SOLIDS HANDLING - MECHANICAL PLAN

project	contract
148538	

drawing **850M101** – rev. **0**

sheet of sheets

file

Scale For Microfilming: Millimeters / Inches

PIPE ACCESSORIES SYMBOLS

- GATE VALVE
- OS&Y — OUTSIDE SCREW & YOKE VALVE
- BUTTERFLY VALVE
- CHECK VALVE
- 2-WAY VALVE
- 3-WAY VALVE
- BALL VALVE
- BALANCING VALVE / CIRCUIT SETTER
- RELIEF, SAFETY OR THERMAL RELIEF VALVE
- M — MOTORIZED CONTROL VALVE
- HOSE GATE DRAIN VALVE
- GLOBE VALVE
- PLUG VALVE
- SRC — SPRING RETURN CLOSED BALL VALVE
- ANGLE VALVE
- SELF CONTAINED PRESSURE REDUCING (REGULATING) VALVE
- AV — AUTOMATIC AIR VENT ASSEMBLY
- MV — MANUAL AIR VENT ASSEMBLY - SEE SPECIFICATIONS FOR APPROPRIATE VALVE TYPE
- FLEX CONNECTION
- PUMP
- THERMOMETER
- BFP — BACKFLOW PREVENTION ASSEMBLY
- SUCTION DIFFUSER
- PRESSURE GUAGE
- Y-TYPE STRAINER
- REMOVABLE CAP
- REMOVABLE PLUG
- REDUCER (CONCENTRIC)
- UNION
- BLIND FLANGE
- TEST CONNECTION
- M — METER
- FM — FLOW METER
- S — STRAINER
- IF — INSULATING FLANGE
- PIPE WITH HEAT TRACE
- FLOW ARROW

PIPE LINE DESIGNATIONS

V	VENT
S	STORM (ABOVE GRADE)
S	STORM (BELOW GRADE)
OD	STORM OVERFLOW
DCW	DOMESTIC COLD WATER
NPCW	NON-POTABLE COLD WATER
DTW	DOMESTIC TEPID WATER
DHWR	DOMESTIC HOT WATER RECIRCULATION
PD	PROCESS DRAIN (ABOVE GRADE)
PD	PROCESS DRAIN (BELOW GRADE)
GW	GREASE WASTE (ABOVE GRADE)
GW	GREASE WASTE (BELOW GRADE)
COND	CONDENSATE DRAIN
CA	COMPRESSED AIR
NG	NATURAL GAS
CO	CLEANOUT IN RISER
WCO	CLEANOUT IN WALL
FCO	CLEANOUT IN FLOOR

PIPE SYMBOLS

- PIPE ELBOW
- PIPE DOWN
- PIPE UP
- PIPE CONTINUATION

PLUMBING FIXTURE LEGEND

WC-01	WATER CLOSET
WC-02	WATER CLOSET - ACCESSIBLE
UR-01	URINAL
UR-02	URINAL, ACCESSIBLE
LAV-01	LAVATORY, COUNTER MOUNTED
LAV-02	LAVATORY, WALL MOUNTED
MS-01	MOP BASIN
SK-01	BREAK SINK
SK-02	MULTI SINK
SK-03	KITCHEN SINK
EWC-01	DUAL ELECTRIC WATER COOLER
EEW-01	EMERGENCY EYEWASH / SHOWER
4" FD-0#	SIZE - FLOOR DRAIN
12" FS-0#	SIZE - FLOOR SINK
HB-01	HOSE BIBB
WH-01	WALL HYDRANT

RISER DIAGRAM LEGEND

CO	CLEANOUT (CO) IN RISER
FCO	CLEANOUT (FCO) IN FLOOR
	VENT THRU ROOF (VTR)
	FLOOR OR WALL PENETRATION
	PLUMBING FIXTURE TRAP
	FLOOR DRAIN / EQUIPMENT DRAIN
WHA-A	WATER HAMMER ARRESTOR
WCO	WALL CLEANOUT (WCO)
UP / DN	ISOMETRIC DIRECTION ARROW

DETAIL / ENLARGED CALLOUT SYMBOL

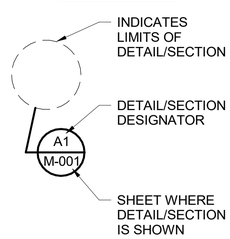

PLUMBING ABBREVIATIONS

AC	AIR COCK
AFF	ABOVE FINISHED FLOOR
AG	AIR GAP
ARV	AIR RELEASE VALVE
BF	BLIND FLANGE
BFF	BELOW FINISHED FLOOR
BOP	BOTTOM OF PIPE
BW	BUTT WELD
CH OP	CHAIN WHEEL OPERATOR
CONC	CONCENTRIC
CORP STOP	CORPORATION STOP
CPVC	CHLORINATED POLYVINYL CHLORIDE
D	DRAIN
DI	DUCTILE IRON
DN	DOWN
DWH	DOMESTIC WATER HEATER
ELL	ELBOW
EXIST	EXISTING
FCA	FLANGED COUPLING ADAPTER
FD	FLOOR DRAIN
FE	FLANGED END
FF	FLAT FACED
FI	FLOW INDICATOR
FLGD	FLANGED
FM	FLOW METER
FOB	FLAT ON BOTTOM
FOT	FLAT ON TOP
FOV	FLOAT OPERATED VALVE
FRP	FIBERGLASS REINFORCED PIPE
FW	FIELD WELD
HD	HUB DRAIN
I.E.	INVERT ELEVATION
IF	INSULATED FLANGE
LC	LOCK CLOSED
LO	LOCK OPEN
LR	LONG RADIUS
NPSH	NET POSITIVE SUCTION HEAD
NRS	NON-RISING STEM
NWL	NORMAL WATER LEVEL
PSIA	POUNDS PER SQUARE INCH ABSOLUTE
PSIG	POUNDS PER SQUARE INCH GAUGE
PVC	POLYVINYL CHLORIDE
QF	PROVIDED BY KITCHEN CONSULTANT
RED	REDUCER-REDUCING
RS	RISING STEM
SCH	SCHEDULE
SCRD	SCREWED
SR	SHORT RADIUS
TD	TRENCH DRAIN
TOC	TOP OF CONCRETE
TOG	TOP OF GRATING
TOP	TOP OF PIPE
TOS	TOP OF STEEL
TP	TRAP PRIMER
VTR	VENT THROUGH ROOF

SECTION CUT SYMBOL

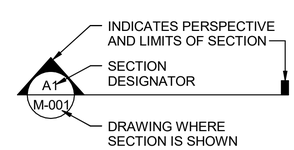

DETAIL / SECTION TITLE

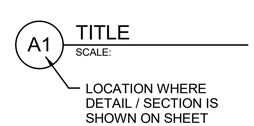

GENERAL NOTES

1. LEGEND IS GENERAL IN NATURE AND MAY INDICATE MORE INFORMATION THAN IS APPLICABLE TO PROJECT. SEE PLANS FOR SPECIFIC SYMBOLS AND ABBREVIATIONS.
2. COORDINATE ALL PIPE SLEEVE REQUIREMENTS WITH FOUNDATION SUBCONTRACTOR.
3. COORDINATE MECHANICAL ROOM FLOOR DRAINS WITH ACTUAL EQUIPMENT LOCATIONS AND DRAINAGE REQUIREMENTS.
4. UNLESS NOTED OTHERWISE, THE CIVIL AND MECHANICAL INTERFACE POINT IS 5 FEET OUTSIDE OF THE BUILDING WALL.
5. PER 2021 IPC 704.1, INSTALL ALL GREASE PIPING WITH 1/4" PER FT (2%) SLOPE. INSTALL SANITARY PIPING 2 1/2"Ø OR LESS WITH 1/4" PER FT (2%) SLOPE, PIPING 3"Ø TO 6"Ø WITH 1/8" PER FT (1%) SLOPE, & PIPING 8"Ø OR LARGER WITH 1/16" PER FT (0.5%) SLOPE DOWNWARD IN DIRECTION OF FLOW. INSTALL VENT PIPING 2"Ø OR LESS WITH 1/4" PER FT (2%) SLOPE & PIPING 2 1/2"Ø OR LARGER WITH 1/8" PER FT (1%) SLOPE DOWNWARD TOWARD FIXTURE OR STACK.
6. ALL FIXTURES SHALL HAVE A P-TRAP INSTALLED.
7. PROVIDE ALL MATERIALS, VALVES, HANGERS, ETC. AND EQUIPMENT AND PERFORM ALL LABOR REQUIRED TO INSTALL COMPLETE AND OPERABLE PLUMBING SYSTEMS AS INDICATED ON THE DRAWINGS, AS SPECIFIED AND AS REQUIRED BY CODE.
8. INSTALL ALL PLUMBING FIXTURES, EQUIPMENT AND APPURTENANCES IN ACCORDANCE WITH MANUFACTURER'S RECOMMENDATIONS, CONTRACT DOCUMENTS, AND APPLICABLE CODES AND REGULATIONS.
9. COORDINATE CONSTRUCTION OF ALL PLUMBING WORK WITH STRUCTURAL, CIVIL, ELECTRICAL WORK ETC., SHOWN ON OTHER CONTRACT DOCUMENT DRAWINGS.
10. MAINTAIN A MINIMUM OF 6' - 8' CLEARANCE TO UNDERSIDE OF PIPES, CONDUITS, ETC., THROUGHOUT ACCESS ROUTES AND IN MECHANICAL ROOMS.
11. LOCATE ALL PLUMBING EQUIPMENT FOR UNOBSTRUCTED ACCESS TO UNIT ACCESS PANELS, CONTROLS, AND VALVING.
12. VERIFY DIMENSIONS AND CONNECTION SIZE WITH FURNISHED EQUIPMENT.
13. ALL ELEVATIONS ARE ABOVE FINISHED FLOOR TO BOTTOM OF PIPE UNLESS NOTED OTHERWISE.

GEORGIA REGISTERED No. PE 031237 PROFESSIONAL ENGINEER DANIEL FINKELSTEIN
06/26/2024

no.	date	by	ckd	description
0	6/26/24	AJC	DF	ISSUED FOR CONSTRUCTION

BURNS McDONNELL
4004 SUMMIT BLVD. NE, SUITE 1200
ATLANTA, GA 30319
770-587-4776
LICENSEE NO. PEF000100
AUTHORIZATION NO. J550903

date 04/12/24	detailed A. CAULINEAU
designed D. FINKELSTEIN	checked D. OLSEN

Perry
HOUSTON COUNTY, GEORGIA

EAST PERRY WWTF
PLUMBING LEGEND, ABBREVIATIONS AND GENERAL NOTES

project 148538	contract
drawing 100P001	rev. 0
sheet	of sheets
file	

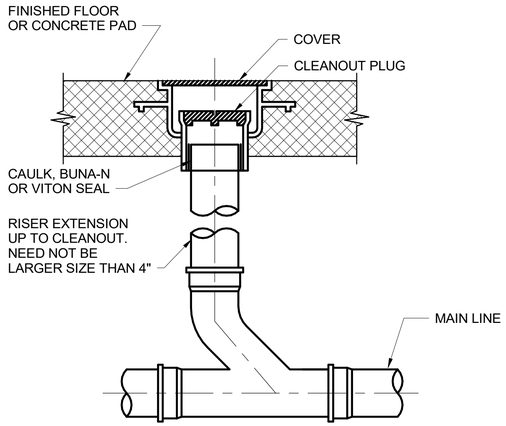

FLOOR CLEANOUT DETAIL 1
NOT TO SCALE

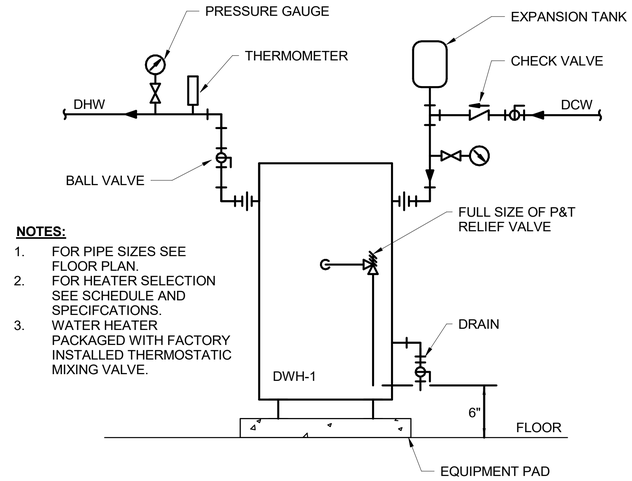

NOTES:

1. FOR PIPE SIZES SEE FLOOR PLAN.
2. FOR HEATER SELECTION SEE SCHEDULE AND SPECIFCATIONS.
3. WATER HEATER PACKAGED WITH FACTORY INSTALLED THERMOSTATIC MIXING VALVE.

ELECTRIC WATER HEATER 2
NOT TO SCALE

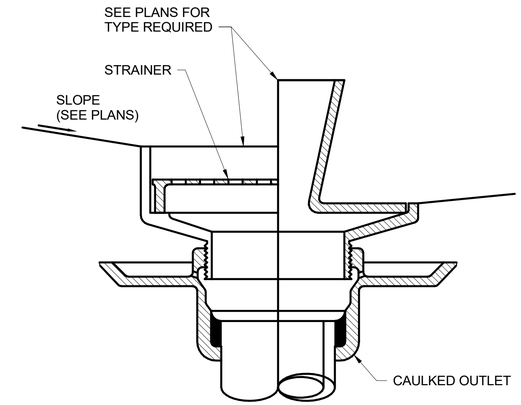

FLOOR DRAIN DETAIL 3
NOT TO SCALE

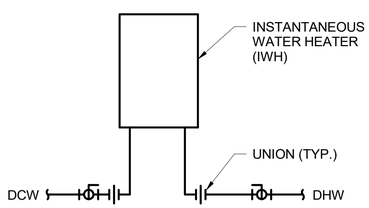

INSTANTANEOUS WATER HEATER 4
NOT TO SCALE

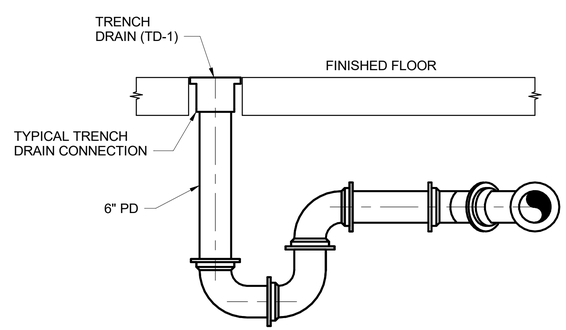

TRENCH DRAIN CONNECTION 5
NOT TO SCALE

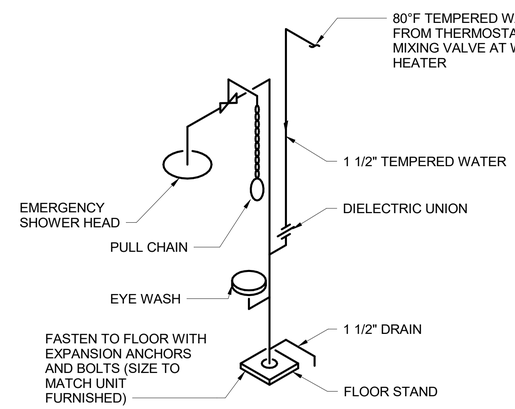

EMERGENCY SHOWER / EYEWASH DETAIL 6
NOT TO SCALE

no.	date	by	ckd	description
0	6/26/24	AJC	DF	ISSUED FOR CONSTRUCTION

GEORGIA REGISTERED No. PE 031237 PROFESSIONAL ENGINEER DANIEL FINKELSTEIN
06/26/2024

BURNS McDONNELL
4004 SUMMIT BLVD. NE, SUITE 1200
ATLANTA, GA 30319
770-587-4776
LICENSEE NO. PEF000100
AUTHORIZATION NO. J550903

date	detailed
04/12/24	A. CAULINEAU
designed	**checked**
A. CAULINEAU	D. OLSEN

Perry
HOUSTON COUNTY, GEORGIA

EAST PERRY WWTF
PLUMBING DETAILS

project	contract
148538	

drawing **100P501** – rev. **0**
sheet of sheets
file

no.	date	by	ckd	description
0	6/26/24	AJC	DF	ISSUED FOR CONSTRUCTION

PLUMBING FIXTURE SCHEDULE

TAG	LOCATION	DESCRIPTION	TYPE	MOUNTING HEIGHT	WATER INLET	CONNECTION SIZE (IN)		BASIS OF DESIGN		NOTES
						INLET	WASTE	MFR	MODEL	
EEWS-1	SOLIDS HANDLING BLDG	FLOOR MOUNTED EMERGENCY EYE / FACE WASH / DRENCH SHOWER COMBINATION	13" BOWL WITH FLIP OPEN DUST COVER, FULL FLOW STAY-OPEN BALL VALVE, 3 GPM EYE / FACE WASH AND 20 GPM SHOWER HEAD	EYE WASH BOWL RIM HT. 35" AFF	TOP	1 1/4"	1 1/4"	BRADLEY	S19314	1, 2
EEWS-2	PROCESS BLDG	HEAT TRACED FLOOR MOUNTED EMERGENCY EYE / FACE WASH / DRENCH SHOWER COMBINATION	13" BOWL WITH FLIP OPEN DUST COVER, FULL FLOW STAY-OPEN BALL VALVE, 3 GPM EYE / FACE WASH AND 20 GPM SHOWER HEAD	EYE WASH BOWL RIM HT. 35" AFF	TOP	1 1/4"	1 1/4"	BRADLEY	S19304	1, 2, 3
HB-1	PROCESS & SOLIDS HANDLING BLDG	INTERIOR HOSE BIBB	BRASS W/ANTI-SIPHON VACUUM BREAKER, WHEEL HANDLE AND HOSE CONNECTION	36" AFF		3/4"	NA	WOODFORD	24	
US-1	SOLIDS HANDLING BLDG	SINGLE COMPARTMENT SINK, 16 GA TYPE 304 SS, SS LEGS W/ADJUSTABLE FEET	8" ON CENTERS FAUCET, 8" SWIVEL SPOUT, TWO LEVER HANDLE, AND 2.2 GPM AERATOR	FLOOR MOUNTED	TOP	3/4"	3"	REGENCY	600S11818	

NOTES:
1. PROVIDE ALL BOWLS, DUST COVERS, AND SHOWER HEADS OF STAINLESS STEEL.
2. PROVIDE WITH ELELCTRIC HEAT TRACE CABLE AND ACCESSORIES.
3 MEETS REQUIREMENTS OF ANSI/ISEA Z358.1.

WATER HEATER SCHEDULE

TAG	LOCATION	TYPE	ELEMENT			STORAGE CAPACITY (GAL)	EWT (DEG. F)	HOT WATER TEMPERATURE SETTING (DEG. F)	FIXTURE SUPPLY TEMPERATURE (DEG. F)	ELECTRICAL		BASIS OF DESIGN		NOTES
			WATTS	QTY. (MBH)	TOTAL KW (%)					VOLTS	PHASE	MANUFACTURER	MODEL	
DWH-1	PROCESS BLDG	ELECTRIC	4500	1	4.5	120	65	160	80	208	1	BRADLEY	NAVIGATOR S19-T120	1, 2, 3
DWH-2	SOLIDS HANDLING BLDG	ELECTRIC	4500	1	4.5	120	65	160	80	208	1	BRADLEY	NAVIGATOR S19-T120	1, 2, 3
DWH-3	SOLIDS HANDLING BLDG	ELECTRIC	3000	1	3.0	N/A	65	110	80	208	1	EEMAX	SPEX3208	

NOTES:
1. NON-SIMULTANEOUS OPERATION.
2 MEETS REQUIREMENTS OF ANSI/ISEA Z358.1
3. PROVIDE HEATER PRE-PIPED BY FACTORY WITH THERMOSTATIC MIXING VALVE #EFX50 AND 4.8 GALLON EXPANSION TANK

BACKFLOW PREVENTER SCHEDULE

TAG	TYPE	LOCATION	SYSTEM	SIZE (IN)	DESIGN FLOW (GPM)	PRESSURE LOSS AT DESIGN FLOW RATE (PSIG)	BASIS OF DESIGN		NOTES
							MANUFACTURER	MODEL	
BFP-1	RPZ	PROCESS BLDG	EMERGENCY EYE/FACE WASH & SHOWER	1 1/4"	20	14	ZURN	975XL2	1
BFP-2	RPZ	SOLIDS HANDLING BLDG	EMERGENCY EYE/FACE WASH & SHOWER	1 1/4"	20	14	ZURN	975XL2	1

NOTES:
1. PROVIDE WITH AIR GAP FITTING AND 1 1/4"" PIPING DRAIN FROM BACKFLOW PREVENTER TO FLOOR DRAIN.

DRAIN SCHEDULE

TAG	TYPE	DESCRIPTION	STRAINER	CONNECTION SIZE
FD-1	FLOOR DRAIN - ROUND	CAST IRON, TWO PIECE BODY, INTEGRAL CLAMPING COLLAR, TRAP PRIMER CONNECTION	5"ø ADJUSTABLE, NICKEL-BRONZE	SEE PLANS FOR SIZE
TD-1	TRENCH DRAIN	SECURED GRATE, POLYPROPYLENE, CHANNEL INTERLOCKING DESIGN, WITH BUILT IN 0.6% SLOPE, RADIUS BOTTOM	STAINLESS STEEL GRATE	SEE PLANS FOR SIZE

NOTES:
1. SIZE AS INDICATED BY CONNECTED PIPE SIZE.
2. NEOPRENE GASKETED PUSH-ON OUTLET.
3. PROVIDE TRAP PRIMER CONNECTION AND CONNECT TO ELECTRONIC TRAP PRIMER MANIFOLD AS SHOWN ON FLOOR PLANS.

CLEANOUT SCHEDULE

TAG	DESCRIPTION	TYPE	COVER	NOTES
FCO-1	STANDARD DUTY FLOOR CLEANOUT	CAST IRON, THREADED BRASS COUNTERSUNK PLUG AND ADJUSTABLE HOUSING.	SCORIATED NICKEL BRONZE TOP	

NOTES:
1. SIZE AS REQUIRED PER CODE.

GEORGIA REGISTERED No. PE 031237 PROFESSIONAL ENGINEER DANIEL FINKELSTEIN
06/26/2024

BURNS McDONNELL
4004 SUMMIT BLVD. NE, SUITE 1200
ATLANTA, GA 30319
770-587-4776
LICENSEE NO. PEF000100
AUTHORIZATION NO. J550903

date	detailed
04/12/24	A. CAULINEAU
designed	**checked**
A. CAULINEAU	D. OLSEN

Perry
HOUSTON COUNTY, GEORGIA

EAST PERRY WWTF
PLUMBING SCHEDULES

project	contract
148538	

drawing **100P601** – rev. **0**
sheet of sheets
file

no.	date	by	ckd	description
0	6/26/24	AJC	DF	ISSUED FOR CONSTRUCTION

NOTES:

1. FOR GENERAL NOTES, SYMBOLS, AND ABBREVIAITONS SEE DRAWING 100P001.
2. MOUNT PIPING AS HIGH AS POSSIBLE, AND COORDINATE ROUTING AND HEIGHT WITH OTHER TRADES THROUGHOUT.
3. CONTRACTOR TO COORDINATE PIPE ROUTING TO ELIMINATE INTERFERENCES WITH DUCTWORK, LIGHTING AND OTHER EQUIPMENT.

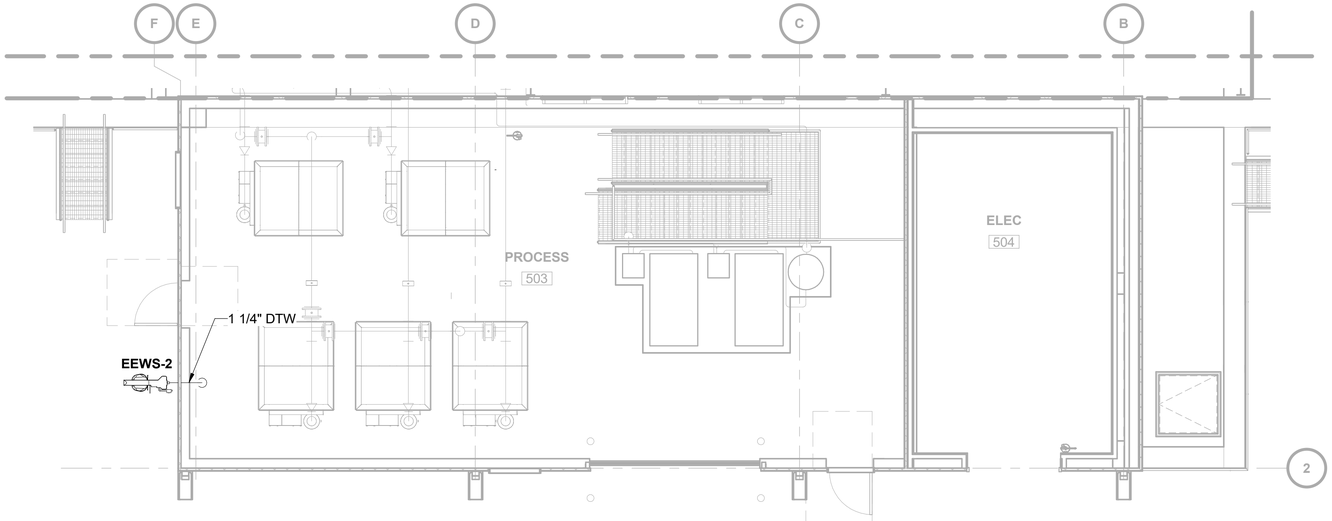

PROCESS UPPER LEVEL PLAN - PLUMBING

0 4' 8' 12'
SCALE IN FEET

NORTH

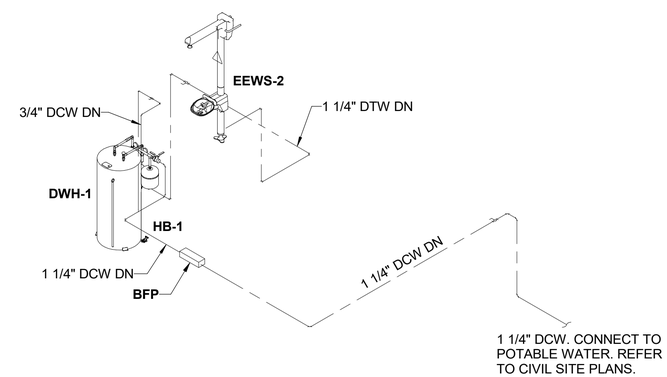

PROCESS DOMESTIC WATER ISOMETRIC

0 2' 10' 20'
SCALE IN FEET

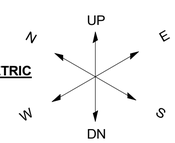

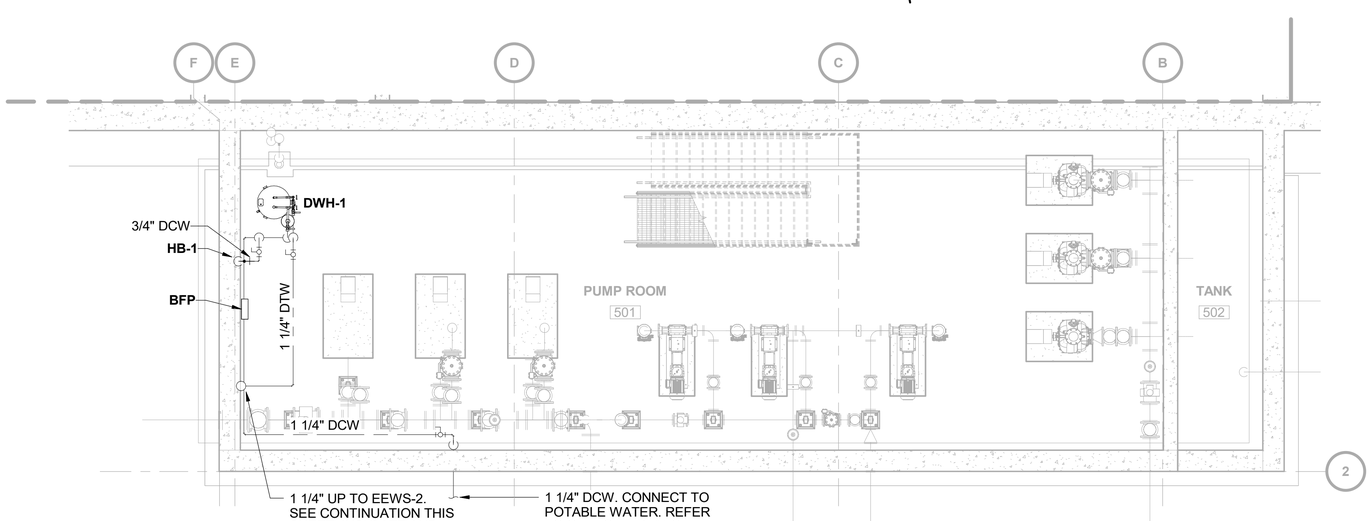

1 1/4" UP TO EEWS-2. SEE CONTINUATION THIS SHEET. INSULATE AND HEAT TRACE ALL EXTERIOR PIPING.

1 1/4" DCW. CONNECT TO POTABLE WATER. REFER TO CIVIL SITE PLANS.

PROCESS LOWER LEVEL PLAN - PLUMBING

0 4' 8' 12'
SCALE IN FEET

NORTH

GEORGIA REGISTERED No. PE 031237 PROFESSIONAL ENGINEER DANIEL FINKELSTEIN

06/26/2024

BURNS McDONNELL
4004 SUMMIT BLVD. NE, SUITE 1200
ATLANTA, GA 30319
770-587-4776
LICENSEE NO. PEF000100
AUTHORIZATION NO. J550903

date	detailed
04/12/24	A. CAULINEAU
designed	**checked**
A. CAULINEAU	D. OLSEN

Perry

HOUSTON COUNTY, GEORGIA

EAST PERRY WWTF

PROCESS BUILDING - UPPER & LOWER LEVEL PLANS

project	contract
148538	

drawing 500P101 — **rev.** 0

sheet **of** **sheets**

file

NOTES:

1. FOR GENERAL NOTES, SYMBOLS, AND ABBREVIAITONS SEE DRAWING 100P001.
2. MOUNT PIPING AS HIGH AS POSSIBLE, AND COORDINATE ROUTING AND HEIGHT WITH OTHER TRADES THROUGHOUT.
3. CONTRACTOR TO COORDINATE PIPE ROUTING TO ELIMINATE INTERFERENCES WITH DUCTWORK, LIGHTING AND OTHER EQUIPMENT.

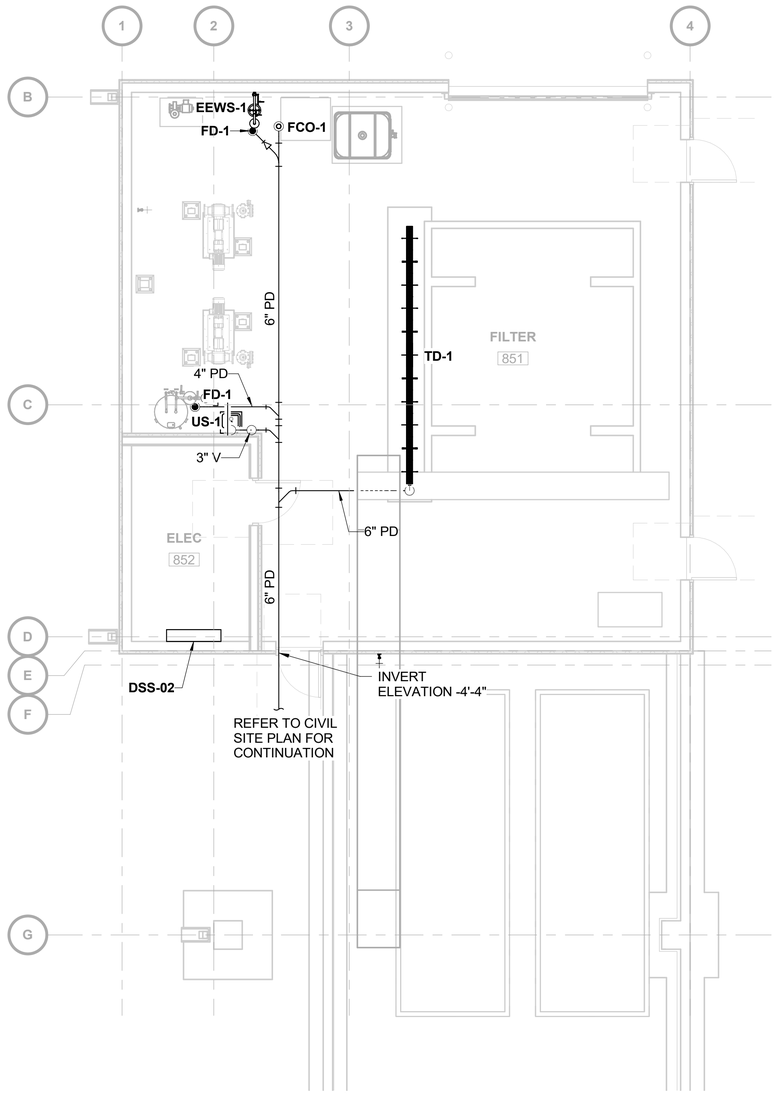

PLUMBING - WASTE & VENT PLAN

0 4' 8' 12'
SCALE IN FEET

NORTH

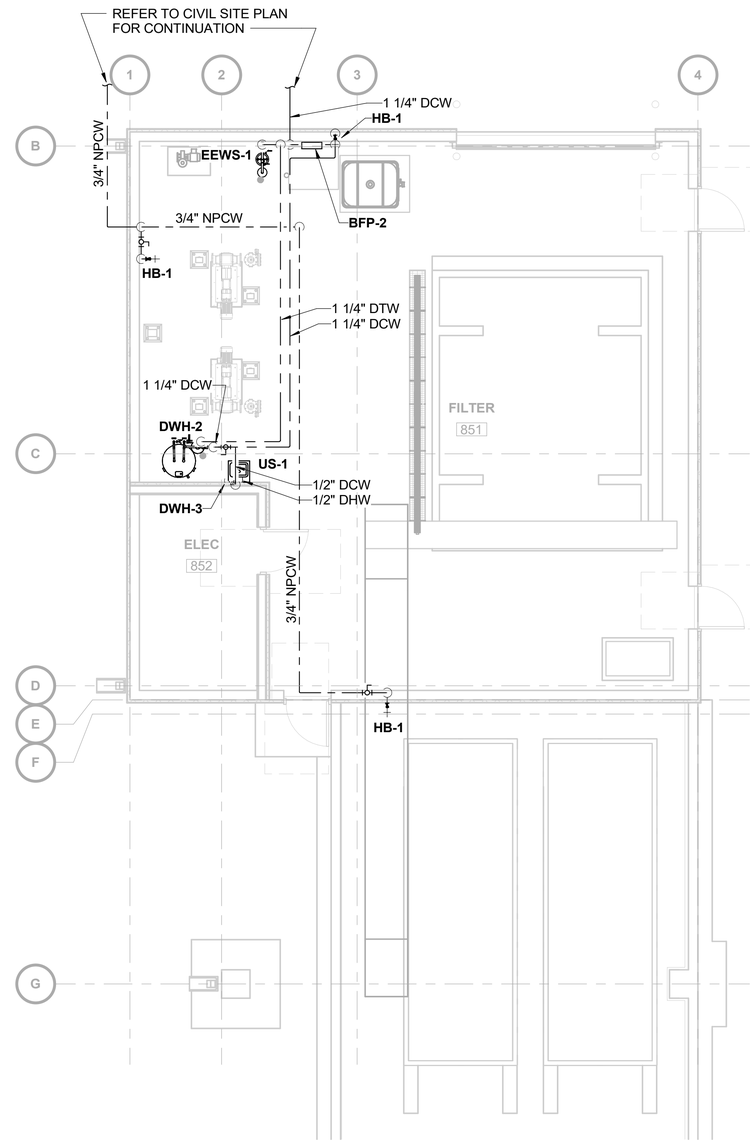

PLUMBING - DOMESTIC WATER PLAN

0 4' 8' 12'
SCALE IN FEET

NORTH

GEORGIA REGISTERED No. PE 031237 PROFESSIONAL ENGINEER DANIEL FINKELSTEIN

06/26/2024

no.	date	by	ckd	description
0	6/26/24	AJC	DF	ISSUED FOR CONSTRUCTION

BURNS McDONNELL
4004 SUMMIT BLVD. NE, SUITE 1200
ATLANTA, GA 30319
770-587-4776
LICENSEE NO. PEF000100
AUTHORIZATION NO. J550903

date	detailed
04/12/24	A. CAULINEAU
designed	**checked**
A. CAULINEAU	D. OLSEN

Perry

HOUSTON COUNTY, GEORGIA

EAST PERRY WWTF

SOLIDS HANDLING - PLUMBING PLANS

project	contract
148538	

drawing 850P101 – **rev.** 0

sheet **of** **sheets**

file

NOTES:

1. FOR GENERAL NOTES, SYMBOLS, AND ABBREVIAITONS SEE DRAWING 100P001.

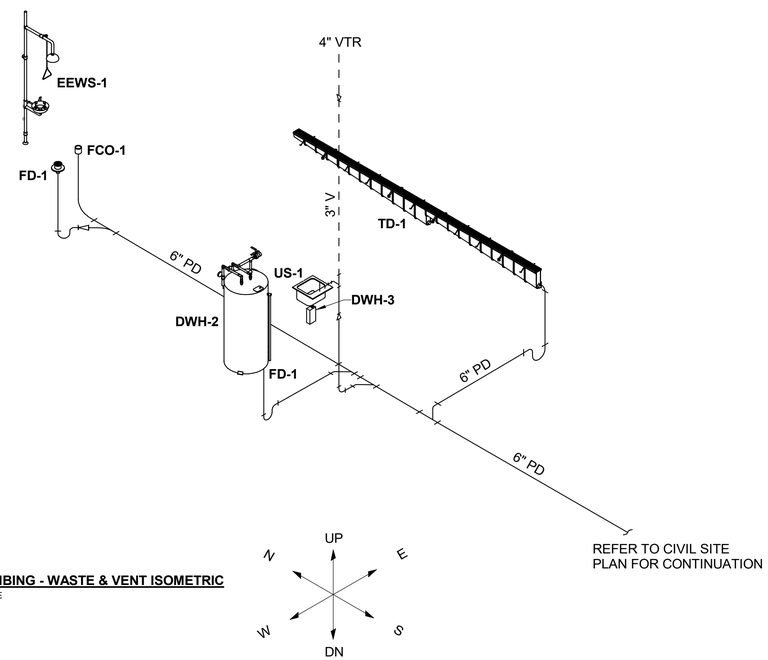

FFE PLUMBING - WASTE & VENT ISOMETRIC

NOT TO SCALE

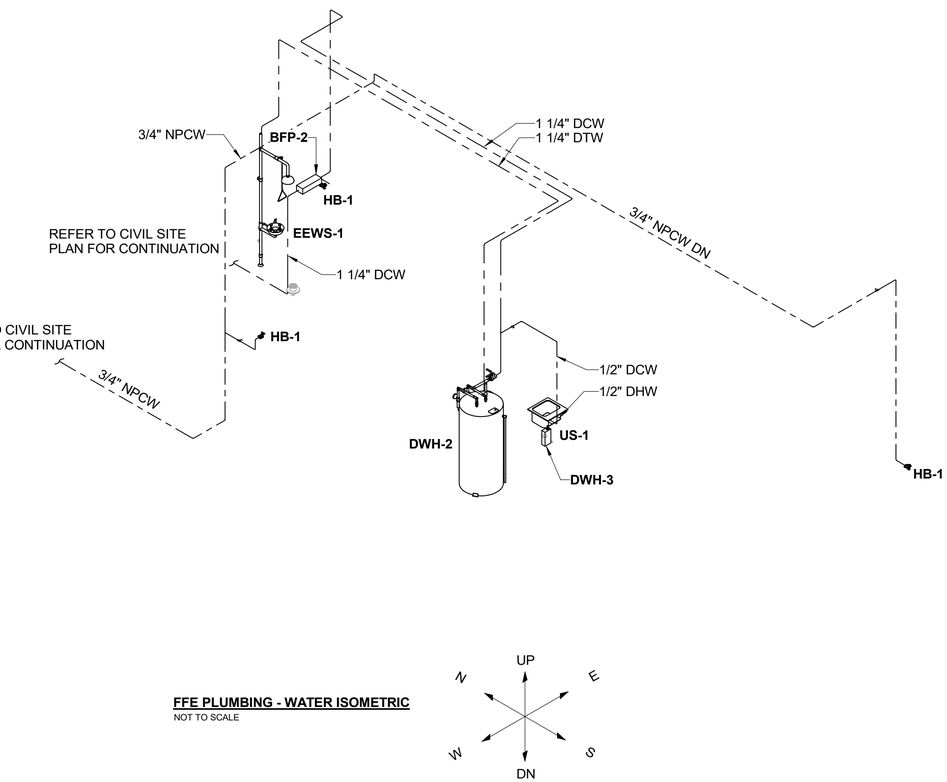

FFE PLUMBING - WATER ISOMETRIC

NOT TO SCALE

no.	date	by	ckd	description
0	6/26/24	AJC	DF	ISSUED FOR CONSTRUCTION

BURNS McDONNELL
4004 SUMMIT BLVD. NE, SUITE 1200
ATLANTA, GA 30319
770-587-4776
LICENSEE NO. PEF000100
AUTHORIZATION NO. J550903

date	detailed
04/12/24	A. CAULINEAU
designed	**checked**
A. CAULINEAU	D. OLSEN

Perry

HOUSTON COUNTY, GEORGIA

EAST PERRY WWTF

SOLIDS HANDLING - PLUMBING ISOMETRIC

project	contract
148538	

drawing 850P901 — **rev.** 0

sheet **of** **sheets**

file

GEORGIA REGISTERED No. PE 031237 PROFESSIONAL ENGINEER DANIEL FINKELSTEIN

06/26/2024

DOUBLE LINE PIPING

- GATE VALVE
- BUTTERFLY VALVE
- FLANGED COUPLING ADAPTOR
- REDUCER
- FLANGED PIPING
- DOUBLE BOLTED SLEEVE COUPLING
- EXPANSION JOINT
- MECHANICAL JOINT PIPING
- HARNESSED SLEEVE COUPLING
- CHECK VALVE
- BALL VALVE
- PLUG VALVE
- DISMANTLING JOINT
- ELBOW TURNING DOWN
- ELBOW TURNING UP
- AIR VAC
- GLOBE VALVE
- MAG METER
- BLIND FLANGE
- WALL PIPE PENETRATION
- PIPE SUPPORT LOCATION
- FLAP GATE VALVE

ABOVE
PIPES CROSSING
BELOW

TYPICAL PIPE BREAK

BELOW
PIPES CROSSING WITH BREAK-OUT
TO SHOW PIPES OR EQUIPMENT BELOW
ABOVE

PIPES IN SECTION

Millimeters
Scale For Microfilming
Inches

PIPING ABBREVIATIONS

MISCELLANEOUS

AFF	ABOVE FINISHED FLOOR
B x S	BELL AND SPIGOT
BF	BLIND FLANGE
CL	CENTERLINE
DIA	DIAMETER
DJ	DISMANTLING JOINT
DN	DOWN
EL OR ELEV	ELEVATION
EX OR EXIST	EXISTING
FCA	FLANGED COUPLING ADAPTER
FM	FLOW METER
GR	GRINDER
INC	INCREASER
INV	INVERT
LR	LONG RADIUS
MGD	MILLION GALLONS PER DAY
MJ	MECHANICAL JOINT
NPW	NON-POTABLE WATER
PE	PLAIN END
PS	PIPE SUPPORT
RAS	RETURN ACTIVATED SLUDGE
RED	REDUCER
RMJ	RESTRAINED MECHANICAL JOINT
SCI	SECONDARY CLARIFIER INFLUENT
TYP	TYPICAL
UV	ULTRAVIOLET
WAS	WASTE ACTIVATED SLUDGE
WP	WALL PIPE

PIPING

CIP	CAST IRON PIPE
DIP	DUCTILE IRON PIPE
SST	STAINLESS STEEL
HDPE	HIGH DENSITY POLYETHYLENE
PVC	POLYVINYL CHLORIDE

VALVES

ARV	AIR RELEASE VALVE
BFV	BUTTERFLY VALVE
BV	BALL VALVE
CV	FLAP GATE VALVE
FG	CHECK VALVE
PRV	PRESSURE RELIEF VALVE
PV	PLUG VALVE
TV	TELESCOPING VALVE

LINETYPES

- EXISTING
- NEW CONSTRUCTION
- FUTURE

GENERAL NOTES

1. THIS LEGEND IS TAKEN FROM A STANDARD PROCESS LEGEND AND NOT ALL ITEMS OR EQUIPMENT AS DESIGNATED HEREIN ARE USED ON THIS PROJECT.
2. THE CONTRACTOR SHALL FURNISH, AT NO ADDITIONAL COST TO THE OWNER, ANY BENDS OR FITINGS NECESSARY TO MAKE PROPER HORIZONTAL OR VERTICAL ADJUSTMENTS WHICH CANNOT BE MADE BY DEFLECTING JOINTS AS SPECIFIED BY THE PIPE MANUFACTURER.
3. CONTRACTOR SHALL FLAG AND PROTECT EXISTING SEWERS AND ALL OTHER EXISTING UTILITIES AS REQUIRED.
4. CONTRACTOR RESPONSIBLE FOR ALL DAMAGES TO EXISTING PAVEMENT, SIDEWALK AND CURBS.
5. LOCATION OF ALL EXISTING UTILITIES, STRUCTURES, PROPERTY LINES, SUBSURFACES SOIL OR ROCK CONDITIONS ARE BASED ON THE BEST AVAILABLE INFORMATION AND ARE NOT WARRANTED TO BE EXACT, NOR IS IT WARRANTED THAT ALL EXISTING FACILITIES OR POTENTIAL CONFLICTS ARE SHOWN. EXISTING ITEMS SHOWN IN PROFILES ARE APPROXIMATE ELEVATIONS ONLY.
6. THE CONTRACTOR SHALL BE RESPONSIBLE FOR PROTECTING ALL EXISTING ITEMS, UTILITIES OR STRUCTURES. THE CONTRACTOR SHALL CONTACT UTILITY OWNERS OR MAKE EXPLORATORY EXCAVATION AS NECESSARY TO DETERMINE THE UNDERGROUND UTILITIES AND STRUCTURES AND THE LIMITS AND CHARACTER OF SOIL AND/OR ROCK. IF ANY ITEM REQUIRES RELOCATION, THE CONTRACTOR SHALL NOTIFY THE UTILITY OWNER OF THE ITEM WELL IN ADVANCE OF APPROACH TO THE ITEM AND SHALL BE RESPONSIBLE FOR MAKING ALL ARRANGEMENTS WITH THE UTILITY OWNER FOR RELOCATION.
7. ALL HOLES CUT OUT FOR PIPING OR EQUIPMENT THROUGH EXISTING CONCRETE OR MASONRY WALLS, SLABS, AND ARCHES SHALL BE CORE DRILLED UNLESS OTHERWISE SHOWN. NO STRUCTURAL MEMBER SHALL BE CUT WITHOUT APPROVAL OF THE ENGINEER. REFER TO SPECIFICATIONS FOR FURTHER DETAILS.
8. ANY DEVIATION FROM CONTRACT DRAWINGS OR SPECIFICATIONS MUST BE ACCEPTED BY THE ENGINEER IN WRITING PRIOR TO THE WORK BEING STARTED. ANY DEVIATION PERFORMED WITHOUT THE ENGINEERS ACCEPTANCE WILL NOT BE PAID FOR AND MAY BE REQUIRED TO BE REDONE AT CONTRACTOR EXPENSE.
9. ALL TAPS REQUIRED FOR AIR RELEASE VALVES, SAMPLE TAPS, CORP STOPS, ETC, SHALL BE PROVIDED WITH THE PIPING AS SPECIFIED.

EXISTING UTILITY COORDINATION

1. PRIOR TO WORK, CONTRACTOR SHALL COORDINATE WITH GEORGIA ONE CALL TO LOCATE ALL UNDERGROUND UTILITIES. GEORGIA ONE CALL CAN BE REACHED AT (770) 623-4332.
2. THE CONTRACTOR WILL BE REQUIRED TO PROVIDE A MINIMUM OF 72 HOURS ADVANCED NOTICE TO THE UTILITY OWNERS PRIOR TO THE BEGINNING OF CONSTRUCTION AND REQUEST THAT ANY EXISTING LINES BE FLAGGED. THE CONTRACTOR SHALL COMPLY WITH STATE LAW REQUIRING ANY PERSON OR FIRM DOING EXCAVATION ON THE PUBLIC RIGHT OF WAY DO SO AFTER GIVING NOTICE TO AND OBTAINING INFORMATION FROM UTILITY COMPANIES. ANY UTILITY DAMAGE BY CONSTRUCTION OPERATIONS SHALL BE REPAIRED OR REPLACED AT NO COST TO THE OWNER. THE CONTRACTOR SHALL COORDINATE WITH THE CONTRACTORS FOR UTILITY COMPANIES AND OTHER AGENCIES FOR MINIMUM INCONVIENIENCE TO THE GENERAL PUBLIC.
3. CONTRACTOR SHALL TAKE ALL APPROPRIATE STEPS TO MAINTAIN CONTINUAL SERVICE OF UTILITIES. CONTRACTOR SHALL PROVIDE SUPPORT AND PROTECTION OF ALL UTILITY LINES TO PREVENT UNDERMINING OR DAMAGING OF THE UTILITY LINES DURING CONSTRUCTION. METHOD OF CROSSING AND/OR SUPPORT OF UTILITIES SHALL BE APPROVED BY UTILITY OWNER.

PIPING AND INSTRUMENTATION

ABC - **DEFGH** - **1234**

- FACILITY IDENTIFIER (WHEN APPLICABLE) — ABC
- EQUIPMENT TYPE — DEFGH
- EQUIPMENT NUMBER — 1234

GEORGIA REGISTERED No. PE048949 PROFESSIONAL ENGINEER TRENTON K. HOLLIS

Sealed: June 26th, 2024

no.	date	by	ckd	description
0	6/26/24	TKH	ALW	ISSUED FOR CONSTRUCTION

BURNS McDONNELL
4004 SUMMIT BLVD. NE, SUITE 1200
ATLANTA, GA 30319
770-587-4776
LICENSEE NO. PEF000100
AUTHORIZATION NO. J550903

date: APRIL 24, 2023	detailed: J. BENTRUP
designed: T. HOLLIS	checked: A. WADDOUPS

Perry

HOUSTON COUNTY, GEORGIA

EAST PERRY WWTF

PROCESS LEGEND, ABBREVIATIONS, AND GENERAL NOTES

project: 148538	contract:
drawing: 100D001	rev.: 0
sheet	of sheets

file 148538_HYDRAULIC PROFILE_2022.rvt

no.	date	by	ckd	description
0	6/26/24	TKH	ALW	ISSUED FOR CONSTRUCTION

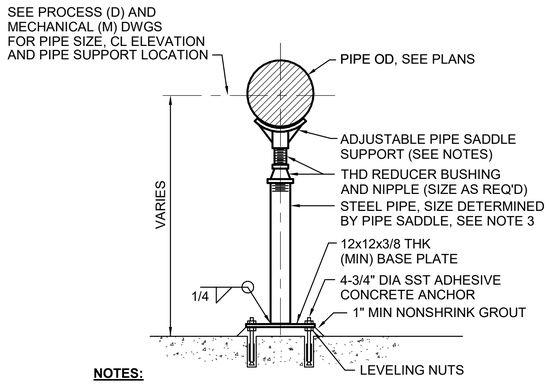

NOTES:

1. WHERE PIPE SUPPORT IS INDICATED TO BE LOCATED UNDER VALVE, PROVIDE ADJUSTABLE PLATE SUPPORT IN LIEU OF SADDLE SUPPORT.
2. COAT PIPE SYSTEM USING SYSTEM E-1 AS SPECIFIED IN SECTION 09 90 00.
3. PROVIDE GALVANIZED STEEL SUPPORTS FOR INTERIOR BUILDING APPLICATIONS. PROVIDE STAINLESS STEEL SUPPORTS FOR ALL OTHER APPLICATIONS.

PS-01 - PIPE SUPPORT
NOT TO SCALE

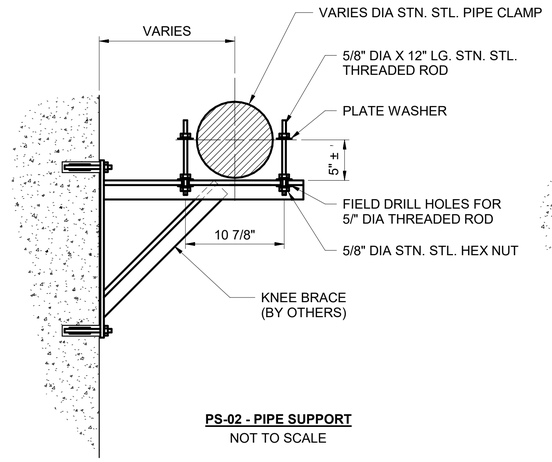

PS-02 - PIPE SUPPORT
NOT TO SCALE

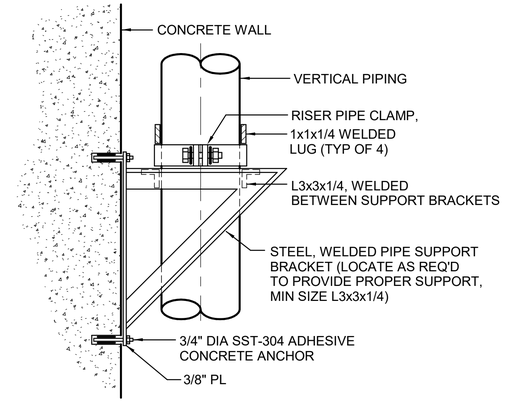

PS-03 - PIPE SUPPORT
NOT TO SCALE

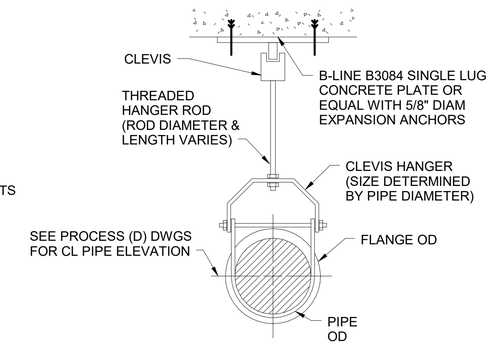

PS-04 - PIPE SUPPORT
NOT TO SCALE

MINIMUM ROD DIAMETER FOR SINGLE ROD HANGERS

NOMINAL PIPE OR TUBING DIA	NOMINAL ROD DIAMETER	
	A	B
IN.	IN.	IN.
1/4 THROUGH 2	3/8	3/8
2 1/2 , 3, 3 1/2	1/2	1/2
4, 5	5/8	1/2
6	3/4	5/8
8, 10, 12	7/8	3/4
14	1	7/8
16, 18	1	
20, 24	1 1/4	

NOTES:

1. COLUMN A FOR USE WITH STD. WT. STEEL PIPE, CAST IRON PRESS. PIPE, CAST IRON SOIL PIPE AND GLASS PIPE.
2. COLUMN B FOR USE WITH COPPER TUBE, PLASTIC PIPE AND FIBERGLASS REINFORCED PIPE.
3. EXTRACTED FROM MSS SP-58, (2018), WITH PERMISSION OF THE PUBLISHER, THE MANUFACTURERS STANDARDIZATION SOCIETY.
4. THIS TABLE PROVIDED FOR REFERENCE ONLY. PROVIDE HANGER RODS IN ACCORDANCE WITH MSS SP-58 AND SPECIFICATIONS.
5. REFER TO SECTION 33 11 60 FOR ADDITIONAL REQUIREMENTS.

MIN ROD DIAMETER FOR SINGLE ROD HANGERS SCHEDULE

MAXIMUM HORIZONTAL PIPE HANGER AND SUPPORT SPACING

NOMINAL PIPE OR TUBE DIA	STANDARD WEIGHT STEEL PIPE	
	WATER SERVICE	VAPOR SERVICE
IN.	FT.	FT.
1/4	7	8
3/8	7	8
1/2	7	8
3/4	7	9
1	7	9
1 1/4	7	9
1 1/2	9	12
2	10	13
2 1/2	11	14
3	12	15
3 1/2	13	16
4	14	17
5	16	19
6	17	21
8	19	24
10	20	26
12	23	30
14	25	32
16	27	35
18	28	37
20	30	39
24	32	42
30	33	44

NOTES:

1. FOR SPACING SUPPORTS INCORPORATING TYPE 40 SHIELDS, SEE TABLE 5, MSS SP-69.
2. DOES NOT APPLY WHERE SPAN CALCULATIONS ARE MADE OR WHERE THERE ARE CONCENTRATED LOADS BETWEEN SUPPORTS SUCH AS FLANGES, VALVES, SPECIALTIES, TEC, OR CHANGES IN DIRECTION REQUIRING ADDITIONAL SUPPORTS.
3. FIRE PROTECTION PIPING: FOLLOW REQUIREMENTS OF THE NATIONAL FIRE PROTECTION ASSOCIATION.
4. CAST IRON AND DUCTILE IRON PIPE: MIN. OF ONE (1) HANGER PER PIPE SECTION CLOSE TO JOINT ON THE BARREL. ALSO AT CHANGE OF DIRECTION AND BRANCH CONNECTIONS. CAST IRON PRESSURE PIPE: 12 FT. MAX. SPACING. CAST IRON SOIL PIPE: 10 FT. MAX SPACING.
5. PLASTIC AND FIBERGLASS REINFORCED PIPE: FOLLOW PIPE MANUFACTURER'S RECOMMENDATIONS FOR SPACING AND SERVICE CONDITIONS.
6. EXTRACTED FROM MSS SP-69, 1983, WITH PERMISSION OF THE PUBLISHER, THE MANUFACTURERS STANDARDIZATION SOCIETY.
7. THIS TABLE PROVIDED FOR REFERENCE ONLY. PROVIDE HANGER AND SUPPORT SPACING IN ACCORDANCE WITH MSS SP-58, SP-69 AND SPECIFICATIONS.

MAX HORIZONTAL PIPE HANGER & SUPPORT SPACING

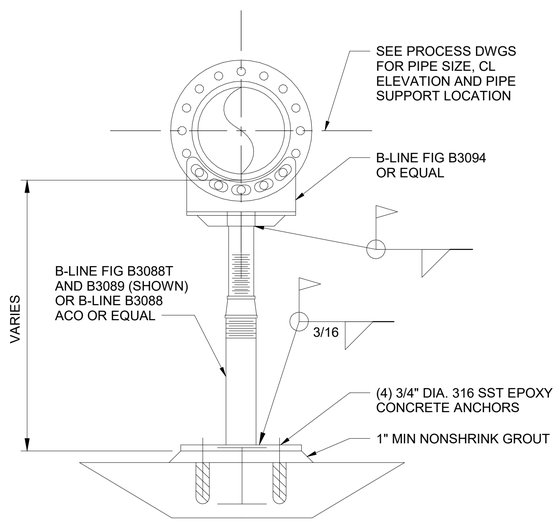

NOTES:

1. COAT PIPE SYSTEM USING SYSTEM E-1 AS SPECIFIED IN SECTION 09 90 00.
2. PROVIDE GALVANIZED STEEL SUPPORTS FOR INTERIOR BUILDING APPLICATIONS. PROVIDE STAINLESS STEEL SUPPORTS FOR ALL OTHER APPLICATIONS.

PS-06 - PIPE SUPPORT
NOT TO SCALE

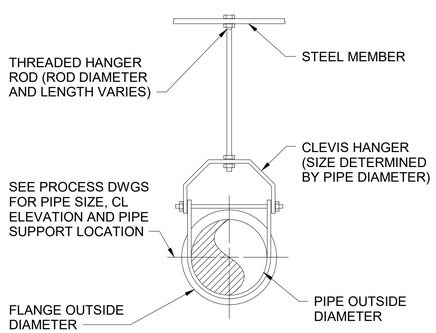

PS-05 - PIPE SUPPORT
NOT TO SCALE

Sealed: June 26th, 2024

BURNS McDONNELL
4004 SUMMIT BLVD. NE, SUITE 1200
ATLANTA, GA 30319
770-587-4776
LICENSEE NO. PEF000100
AUTHORIZATION NO. J550903

date	detailed
APRIL 24, 2023	J. BENTRUP
designed	**checked**
T. HOLLIS	A. WADDOUPS

Perry

HOUSTON COUNTY, GEORGIA

EAST PERRY WWTF
STANDARD DETAILS I

project	contract
148538	

drawing **100D501** – rev. **0**

sheet of sheets

file

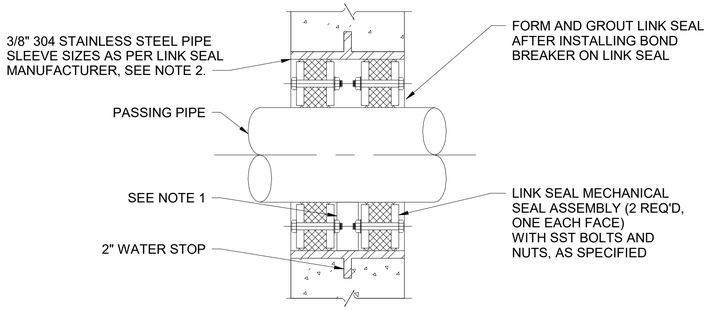

NOTES:

1. PROVIDE SOLID BLOCK TO TRANSMIT THE WEIGHT OF THE PIPE TO THE WALL AND NOT THE LINK SEAL. THE MASONRY BLOCK SHALL BE MOUNTED UNDERNEATH THE PIPE FOR 90° CENTERED IN THE MIDDLE OF THE PIPE.
2. FOR EXISTING STRUCTURES, IN LIEU OF SST SLEEVE, CORE HOLE THROUGH WALL CLEAN HOLE AND PROVIDE COATING OF SIKADUR 62 EPOXY TO THE INSIDE FACE OF THE HOLE TO COVER EXPOSED ENDS OF REBAR. LET EPOXY CURE FOR THE FULL TIME RECOMMENDED BY MFR PRIOR TO INSTALLING PIPE AND LINK SEAL.

DOUBLE LINK SEAL DETAIL
NOT TO SCALE

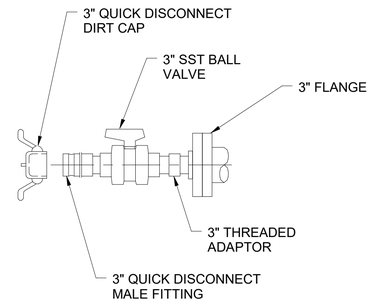

QUICK DISCONNECT DETAIL
NOT TO SCALE

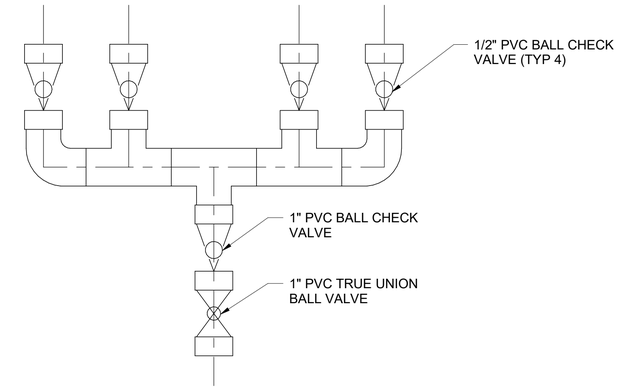

BELT FILTER PRESS POLYMER SPLITTER DETAIL
NOT TO SCALE

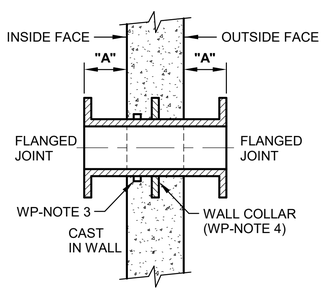

WP-1
NEW WALL
NOT TO SCALE

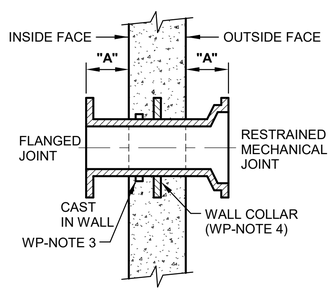

WP-2
NEW WALL
NOT TO SCALE

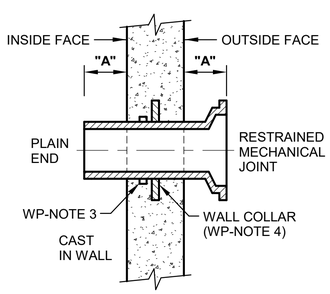

WP-4
NEW WALL
NOT TO SCALE

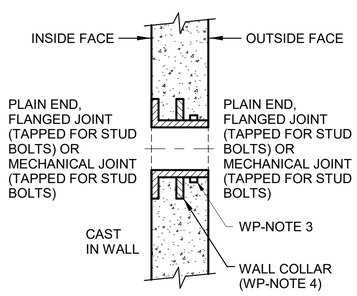

WP-5
NEW WALL
NOT TO SCALE

WP-NOTES:

1. FOR PIPE INSTALLATION INTO PREVIOUSLY POURED CONCRETE: BREAK OUT, OR CORE DRILL WALL, A MINIMUM OF TWO (2) INCHES LARGER THAN WALL COLLAR, OR SYNKO-FLEX PLASTIC WATER STOP; THEN, INSTALL WALL PIPE AND/OR SYNKO-FLEX PLASTIC WATER STOP AND GROUT IN PLACE.
2. EPOXY BONDING AGENT SHALL BE APPLIED TO ALL CONCRETE SURFACES TO BE GROUTED.
3. SYNKO-FLEX PLASTIC WATER STOP. LOCATE ON THE INSIDE FACE "SIDE" OF THE PIPE PENETRATION WITH MINIMUM 2" CLEAR TO FACE OF CONCRETE. LOCATE BETWEEN OUTSIDE DIAMETER OF PIPE AND INSIDE EDGE OF WALL SURFACE APPLICABLE AT ALL WATER AND WASTEWATER CONTAINING STRUCTURES.
4. WALL COLLAR SHALL BE LOCATED IN CENTER OF THE WALL.
5. FLUSH FACE WALL PIPES TAPPED FOR STUDS MAY BE USED IN LIEU OF ENDS AS SHOWN. REMOVABLE PLUGS SHALL BE FURNISHED FOR THE TAPPED OPENINGS TO PREVENT INTRUSION OF CONCRETE OR GROUT.
6. FOR PIPE TERMINATIONS AT STRUCTURES NOT REQUIRED CONNECTION TO PIPE, PLAIN ENDS FLUSH WITH WALL CAN BE USED. COORDINATE WITH ENGINEER.

WALL PIPE SCHEDULE	
PIPE DIAMETER	**"A" ***
2"	4"
4" THRU 12"	6"
14" THRU 20"	8"
24" THRU 30"	10"
36" THRU 48"	12"

* UNLESS NOTED OTHERWISE

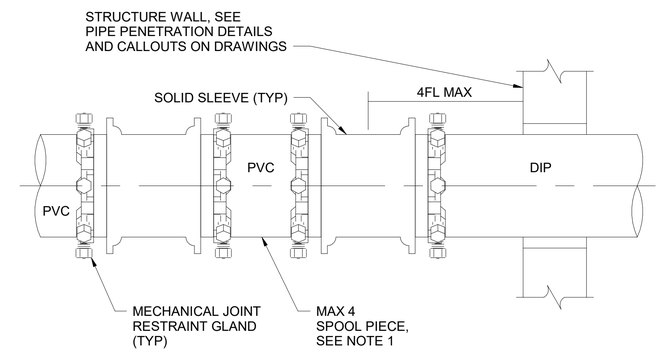

DUCTILE IRON / PVC PIPE

NOTES:

1. SPOOL PIECE MATERIAL SHALL MATCH PIPE MATERIAL OPPOSITE OF STRUCTURE.
2. LUG TYPE, TIE BOLT DIAMETER, AND NUMBER OF RETAINING RODS VARIES BY PIPE DIAMETER AND DESIGN PRESSURE. CONFORM TO AWWA-M11.
3. REQUIRED FOR ALL LINES 6" AND LARGER.
4. USE SINGLE CONNECTION IF THERE IS NOT ADEQUATE SPACE FOR THE DOUBLE CONNECTION.
5. IF THERE IS NOT ADEQUATE SPACE FOR A SINGLE CONNECTION THEN NONE ARE REQUIRED.

DOUBLE SLEEVE STRUCTURE CONNECTION DETAIL
NOT TO SCALE

GEORGIA REGISTERED No. PE048949 PROFESSIONAL ENGINEER TRENTON K. HOLLIS

Sealed: June 26th, 2024

no.	date	by	ckd	description
0	6/26/24	TKH	ALW	ISSUED FOR CONSTRUCTION

BURNS McDONNELL
4004 SUMMIT BLVD. NE, SUITE 1200
ATLANTA, GA 30319
770-587-4776
LICENSEE NO. PEF000100
AUTHORIZATION NO. J550903

date	detailed
APRIL 24, 2023	J. BENTRUP
designed	**checked**
T. HOLLIS	A. WADDOUPS

Perry
HOUSTON COUNTY, GEORGIA

EAST PERRY WWTF
STANDARD DETAILS II

project	contract
148538	

drawing 100D502 – rev. 0

sheet of sheets

file

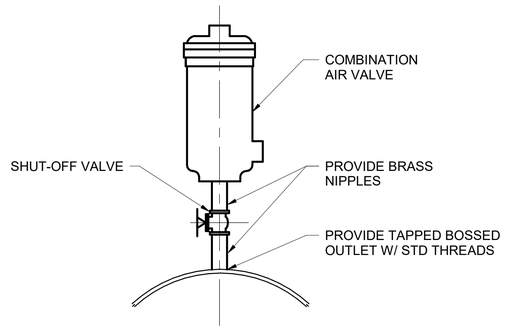

NOTE:

1. ROUTE ALL DISCHARGES TO THE NEAREST TRENCH OR FLOOR DRAIN.

AR01 - AUTOMATIC AIR RELEASE VAVLE

NOT TO SCALE

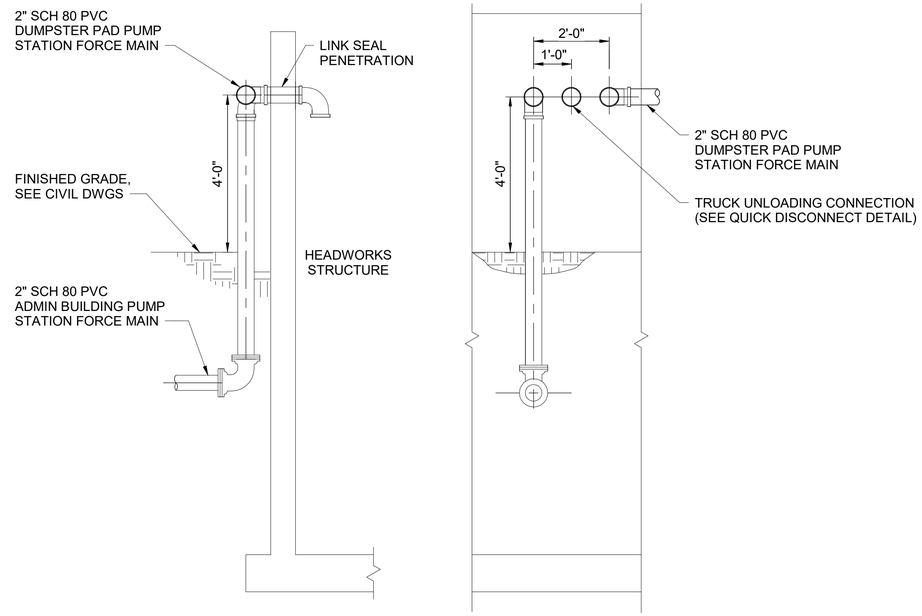

GRINDER PUMP STATIONS TERMINATIONS AT HEADWORKS STRUCTURE

NOT TO SCALE

NOTES:

1. PIPING SHALL BE 2" SCH 80 PVC. SUPPORT PIPING AS REQUIRED.

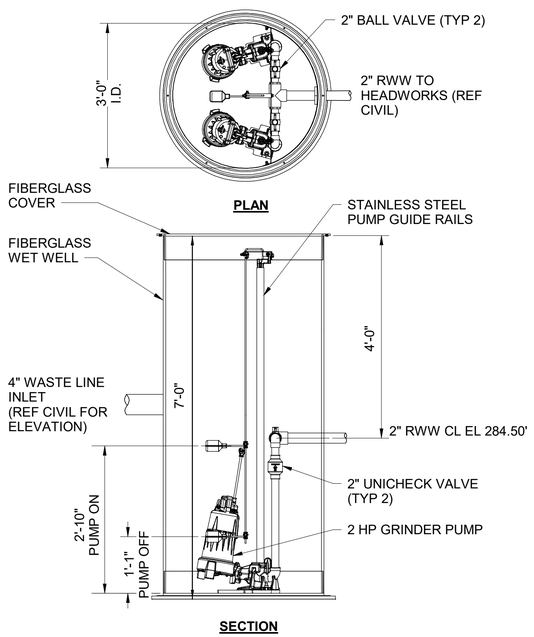

ADMIN BUILDING GRINDER PUMP STATION DETAIL

NOT TO SCALE

NOTES:

1. REFER TO CIVIL DRAWINGS FOR LOCATION OF PUMP STATION AND ELEVATIONS OF INFLUENT PIPE AND FORCE MAIN.
2. INSTALL STRUCTURE AND ALL EQUIPMENT PER MANUFACTURER REQUIREMENTS.
3. FIELD INSTALL 4" INFLUENT CONNECTION BASED ON FINAL WASTE LINE FROM ADMIN BUILDING CONNECTION TO PUMP STATION.

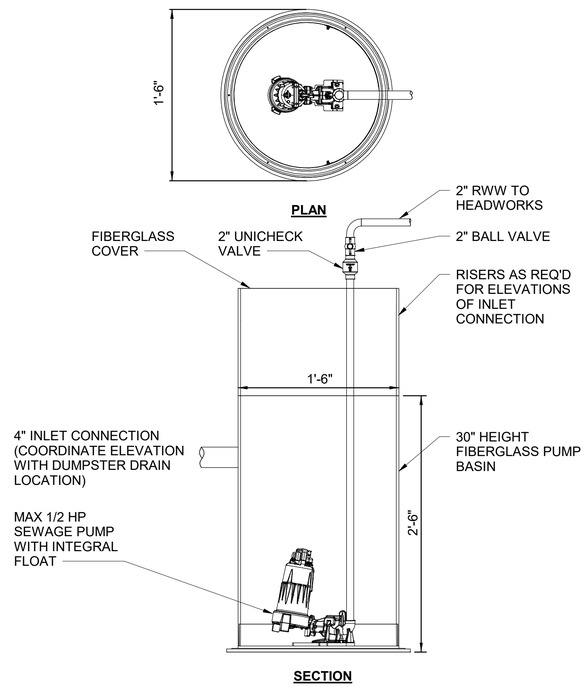

DUMPSTER PAD GRINDER PUMP STATION DETAIL

NOT TO SCALE

NOTES:

1. CONTRACTOR SHALL BE RESPONSIBLE FOR FIELD ROUTING OF PIPING FROM DUMPSTER DRAIN TO PUMP STATION.

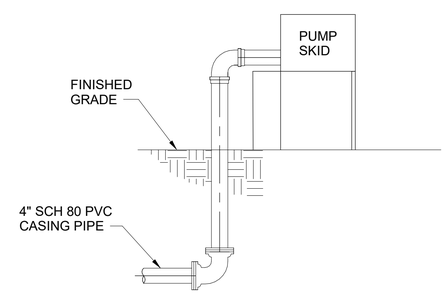

ALUM CASING PIPE TERMINATION AT DOSING SKID

NOT TO SCALE

NOTES:

1. CASING PIPE SHALL BE SCH 80 PVC.
2. TERMINATE AT GROUND SURFACE PLUG AND INDICATE WITH MARKER POST.

Sealed: June 26th, 2024

no.	date	by	ckd	description
0	6/26/24	TKH	ALW	ISSUED FOR CONSTRUCTION

BURNS McDONNELL
4004 SUMMIT BLVD. NE, SUITE 1200
ATLANTA, GA 30319
770-587-4776
LICENSEE NO. PEF000100
AUTHORIZATION NO. J550903

date	detailed
APRIL 24, 2023	J. BENTRUP
designed	**checked**
T. HOLLIS	A. WADDOUPS

Perry

HOUSTON COUNTY, GEORGIA

EAST PERRY WWTF

STANDARD DETAILS III

project	contract
148538	

drawing **100D503** – rev. **0**

sheet of sheets

file

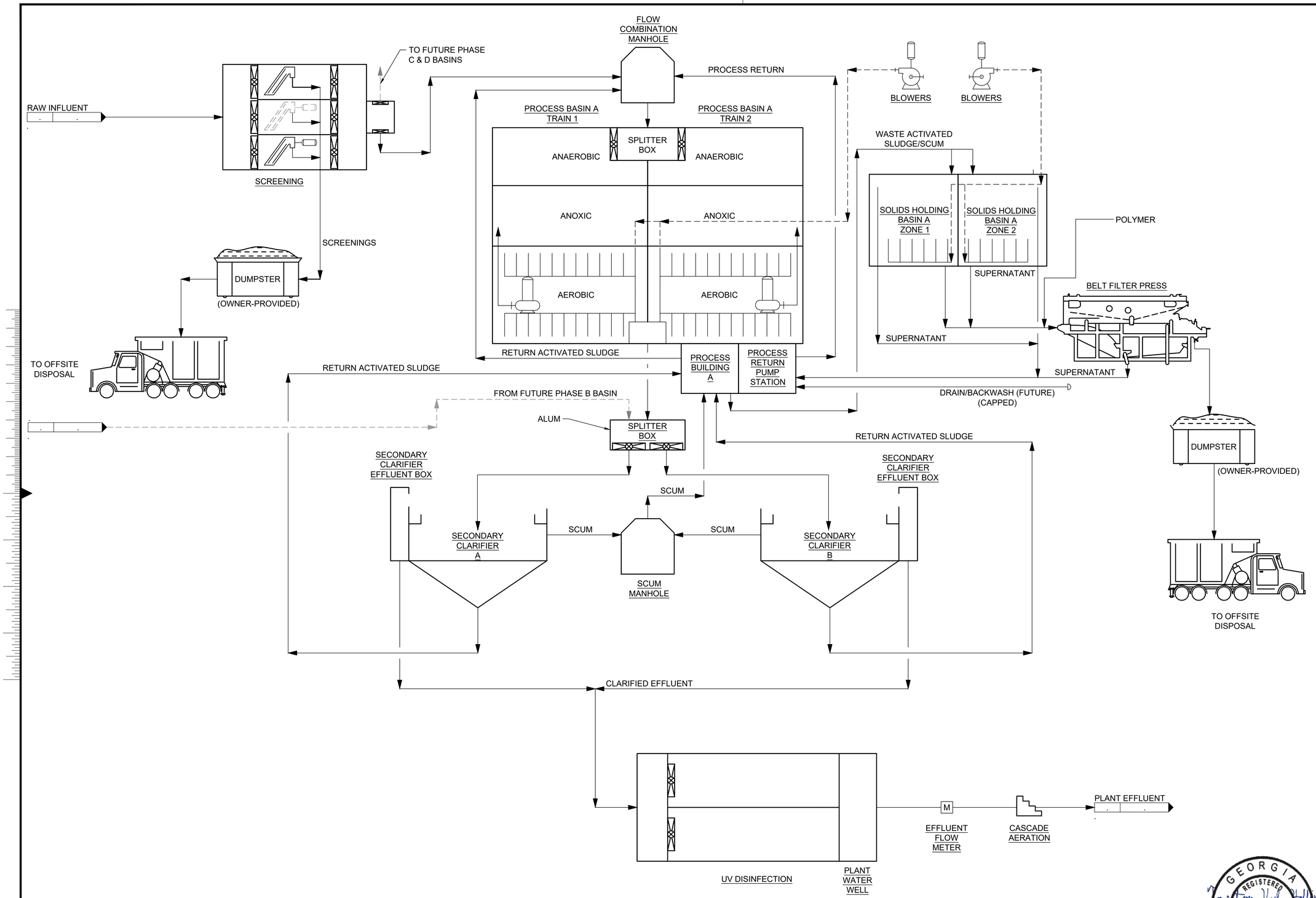

no.	date	by	ckd	description
0	6/26/24	TKH	ALW	ISSUED FOR CONSTRUCTION

BURNS McDONNELL
4004 SUMMIT BLVD. NE, SUITE 1200
ATLANTA, GA 30319
770-587-4776
LICENSEE NO. PEF000100
AUTHORIZATION NO. J550903

date	detailed
OCTOBER 24, 2022	J. BENTRUP
designed	checked
T. HOLLIS	A. WADDOUPS

Perry
HOUSTON COUNTY, GEORGIA

EAST PERRY WWTF
PROCESS FLOW DIAGRAM

project	contract
148538	

drawing **100D601** – rev. **0**
sheet of sheets
file 148538_100D601.DWG

GEORGIA REGISTERED No. PE048849 PROFESSIONAL ENGINEER TRENTON K. HOLLIS
Sealed: June 26th, 2024

C:\USERS\CIGLEASON\APPDATA\LOCAL\AUTODESK\AUTOCAD PLANT 3D\COLLABORATIONCACHE\148538_EASTWWTP_V2022\PID DWG\148538_100D601.DWG 6/24/2024 3:11 PM JMBENTRUP

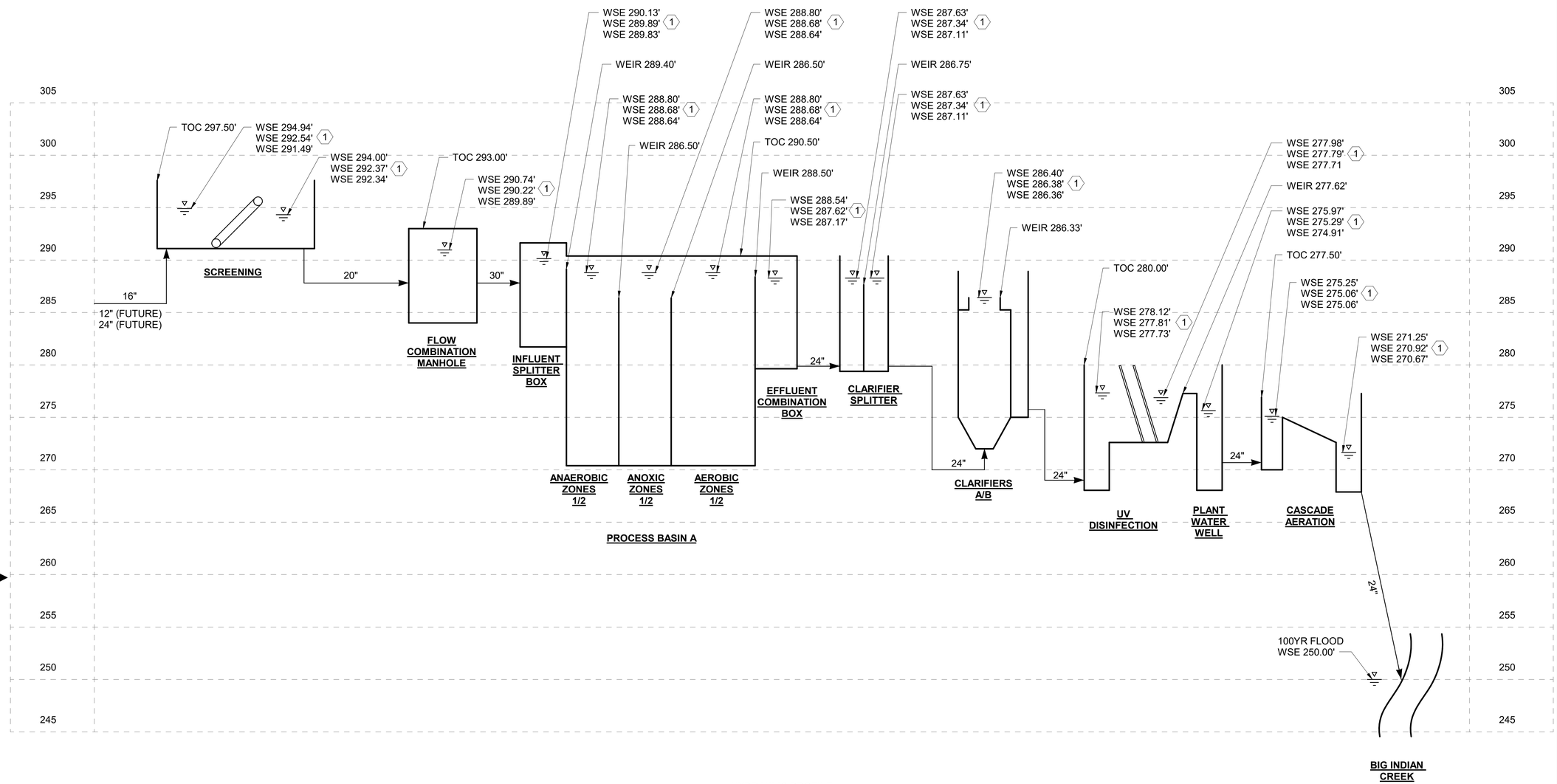

HYDRAULIC PROFILE

WATER SURFACE ELEVATION CALLOUTS

WSE 9.60 MGD (PHASE 2 PEAK)
WSE 5.30 MGD (PHASE 1 PEAK)
WSE 2.50 MGD (PHASE 1 MAX MONTHLY)

WATER SURFACE SYMBOL INDICATED AT PEAK

KEYED NOTES:

1. IT IS ANTICIPATED THAT THIS PLANT WILL EXPAND BY A MULTIPLIER OF 4 FOR FINAL BUILDOUT AND A MULTIPLIER OF 2 FOR THE NEXT STAGE OF CONSTRUCTION. THEREFORE, THE WSE FOR SELECT PROCESSES HAVE BEEN EVALUATED FOR THE PEAK HOUR OF THE STAGE 2 EXPANSION (9.60 MGD).

GEORGIA REGISTERED No. PE048549 PROFESSIONAL ENGINEER TRENTON K. HOLLIS

Sealed: June 26th, 2024

no.	date	by	ckd	description
0	6/26/24	TKH	ALW	ISSUED FOR CONSTRUCTION

BURNS McDONNELL
4004 SUMMIT BLVD. NE, SUITE 1200
ATLANTA, GA 30319
770-587-4776
LICENSEE NO. PEF000100
AUTHORIZATION NO. J550903

date	detailed
APRIL 14, 2023	J. BENTRUP
designed	**checked**
T. HOLLIS	A. WADDOUPS

Perry
HOUSTON COUNTY, GEORGIA

EAST PERRY WWTF
HYDRAULIC PROFILE

project	contract
148538	

drawing **100D602** – rev. **0**

sheet of sheets

file 148538_HYDRAULIC PROFILE_2022.rvt

PARAMETER	UNITS	VALUE
HYDRAULIC PARAMETERS	--	
AVERAGE DAY FLOW (ADF)	MGD	2
MAXIMUM MONTH FLOW (MMF)	MGD	2.5
PEAK HOUR FLOW (PHF)	MGD	5.3

INFLUENT LOADING PARAMETERS	UNITS	ADF	MMF
BIOCHEMICAL OXYGEN DEMAND (BOD)	LB/DAY	4404	5099
	mg/L	264	300
TOTAL SUSPENDED SOLIDS (TSS)	LB/DAY	4004	4895
	mg/L	240	288
Total Kjeldahl Nitrogen	LB/Day	705	816
	mg/l	42	48
AMMONIA-N	LB/DAY	534	634
	mg/L	33	38
TOTAL PHOSPHORUS (TP)	LB/DAY	117	146
	mg/L	7	9

EFFLUENT PARAMETERS	UNITS	VALUE
BIOCHEMICAL OXYGEN DEMAND (BOD)	mg/L	15
TOTAL SUSPENDED SOLIDS (TSS)	mg/L	20
AMMONIA-N	mg/L	5
TOTAL PHOSPHORUS (TP)	mg/L	1
pH	--	6.0-9.0
DISSOLVED OXYGEN, MINIMUM	mg/L	6.0
E. Coli	#/100mL	126

INFLUENT SCREENING	UNITS	VALUE/PARAMETER
NUMBER OF TOTAL SCREEN CHANNELS	--	3
NUMBER OF MECHANICAL SCREEN CHANNELS	--	1
NUMBER OF MANUAL BAR SCREEN CHANNELS	--	1
CAPACITY, EACH CHANNEL	MGD	5.3
TYPE OF SCREEN	--	MICRO BAR SCREEN
OPENING SIZE	mm	2
MOTOR SIZE	HP	1/4
DRIVE TYPE	--	VFD

SECONDARY TREATMENT TRAINS	UNITS	VALUE/PARAMETER
NUMBER OF TRAINS	--	2
NUMBER OF ANAEROBIC SELECTOR BASINS PER TRAIN	--	2
NUMBER OF ANOXIC SELECTOR BASINS PER TRAIN	--	2
NUMBER OF AERATION SELECTOR BASINS PER TRAIN	--	2

ANAEROBIC SELECTOR BASINS	UNITS	VALUE/PARAMETER
NUMBER OF TRAINS	--	2
NUMBER OF BASINS PER TRAIN	--	2
TOTAL TRAIN VOLUME	MG	0.22
AVERAGE SWD	FT	18
HRT @ MMF	HR	1.1
MIXING TYPE	--	LARGE BUBBLE MIXING

ANOXIC SELECTOR BASINS	UNITS	VALUE/PARAMETER
NUMBER OF TRAINS	--	2
NUMBER OF BASINS PER TRAIN	--	2
TOTAL TRAIN VOLUME	MG	0.4
AVERAGE SWD	FT	18
HRT @ MMF	HR	2
MIXING TYPE	--	LARGE BUBBLE MIXING

ANAEROBIC/ANOXIC ZONES MIXING	UNITS	VALUE/PARAMETER
MIXING TYPE	--	LARGE BUBBLE MIXING
NUMBER OF COMPRESSORS	--	1 DUTY / 1 STANDBY
MOTOR SIZE	HP	20
CAPACITY, EACH	SCFM	78
NUMBER OF AIR DRYERS	--	2
CAPACITY, EACH	--	105
NUMBER OF AIR RECEIVER TANKS	--	1
CAPACITY	GAL	200

AEROBIC BASINS	UNITS	VALUE/PARAMETER
NUMBER OF TRAINS	--	2
NUMBER OF BASINS PER TRAIN	--	2
TOTAL TRAIN VOLUME	MG	1.93
AVERAGE SWD	FT	18
HRT	HR	9.1
SRT	D	8.5
Diffuser Type	--	FINE BUBBLE

INTERNAL RECYCLING PUMPS	UNITS	VALUE/PARAMETER
TYPE	--	PROPELLER PUMP
NUMBER	--	2
CAPACITY, EACH	--	
AT MAXIMUM RPM	GPM	2778
AT MINIMUM RPM	GPM	868
TOTAL DYNAMIC HEAD	--	
AT MAXIMUM RPM	FT	3.05
AT MINIMUM RPM	FT	1.01
DRIVE TYPE	--	VFD
IR FLOW RANGE (EACH), (COMBINED)	MGD	1.25-4.0, 2.5-8.0
PERCENT RETURN AT MMF (EACH), (COMBINED)	--	100-200%, 200-400%

ALUM FEED SYSTEM	UNITS	VALUE/PARAMETER
SYSTEM TYPE	--	ENCLOSED DIAPHRAGM PUMP SKID
NUMBER OF PUMPS	--	2
CAPACITY, EACH	GPH	16
ALUM STORAGE	--	TOTE WITH CONTAINMENT SKID
STORAGE CAPACITY	GAL	330

SECONDARY CLARIFIERS	UNITS	VALUE/PARAMETER
NUMBER	--	2
DIAMETER	FT	80
SWD	FT	12.5
SOR @ PEAK FLOW	GPD/SQFT	1055
SLR @ PEAK FLOW	LB/DAY/SQFT	36.34

CLARIFIER SCUM PUMP	UNITS	VALUE/PARAMETER
TYPE	--	ROTARY LOBE PUMP
NUMBER	--	1
CAPACITY	GPM	100
TOTAL DYNAMIC HEAD	FT	46

RAS PUMPING	UNITS	VALUE/PARAMETER
TYPE	--	CENTRIFUGAL
NUMBER	--	1 DUTY / 1 STANDBY
CAPACITY, EACH	--	
AT MAXIMUM RPM	GPM	1730
AT MINIMUM RPM	GPM	865
TOTAL DYNAMIC HEAD	--	
AT MAXIMUM RPM	FT	10.8
AT MINIMUM RPM	FT	4.2
DRIVE TYPE	--	VFD
RAS FLOW RANGE	MGD	1.25-2.5
PERCENT RETURN AT MMF	--	50 - 100 %

WAS PUMPING	UNITS	VALUE/PARAMETER
TYPE	--	ROTARY LOBE PUMP
NUMBER	--	2
CAPACITY, EACH	--	
AT MAXIMUM RPM	GPM	200
AT MINIMUM RPM	GPM	100
TOTAL DYNAMIC HEAD	--	
AT MAXIMUM RPM	FT	46
DRIVE TYPE	--	VFD

PROCESS RETURN PUMPS	UNITS	VALUE/PARAMETER
TYPE	--	CENTRIFUGAL
NUMBER	--	1 DUTY / 1 STANDBY
CAPACITY DUTY POINT, EACH	GPM	1000
TOTAL DYNAMIC HEAD	FT	23
DRIVE TYPE	--	VFD

UV DISINFECTION	UNITS	VALUE/PARAMETER
NUMBER OF CHANNELS	--	2
TYPE	--	INCLINED, OPEN CHANNEL
NUMBER OF BANKS	--	2 PER CHANNEL
NUMBER OF LAMPS PER BANK	--	12
UVT	%	65

NON-POTABLE WATER REUSE SYSTEM	UNITS	VALUE/PARAMETER
TYPE	--	VERTICAL TURBINE
NUMBER	--	1 DUTY / 1 STANDBY
CAPACITY, EACH	--	300
TOTAL DYNAMIC HEAD	FT	115
PRESSURE BLADDER TANK	GAL	40
MOTOR SIZE	HP	15

SOLIDS HOLDING TANK	UNITS	VALUE/PARAMETER
NUMBER OF HOLDING TANKS	--	1
NUMBER OF CELLS PER HOLDING TANK	--	2
SIDE WATER DEPTH	FT	18
PERCENT SOLIDS IN HOLDING TANK	%	1-3
VOLUME PER CELL	MG	0.565
DECANTER TYPE	--	TELESCOPING VALVE
DECANTER SIZE	IN	4
NUMBER OF DECANTERS	--	1 PER CELL
DECANT FLOW, EACH	GPM	460
TELESCOPE VALVE ACTUATION LENGTH	FT	2
AERATION DIFFUSERS TYPE	--	FINE BUBBLE
AERATION BLOWERS TYPE	--	ROTARY SCREW
BLOWER NUMBER	--	2 DUTY, 1 SWING
BLOWER MOTOR SIZE, EACH	HP	75
BLOWER CAPACITY	SCFM	1500

SOLIDS DEWATERING SYSTEM	UNITS	VALUE/PARAMETER
SOLIDS HANDLING PUMPS TYPE	--	ROTARY LOBE
NUMBER	--	2
CAPACITY, EACH	--	
AT MAXIMUM RPM	GPM	200
AT MINIMUM RPM	GPM	100
TOTAL DYNAMIC HEAD	--	
AT MAXIMUM RPM	FT	46
DRIVE TYPE	--	VFD
DEWATERING EQUIPMENT TYPE	--	BELT PRESS
DEWATERING UNITS	--	1 DUTY
DEWATERING CAPACITY	DRY LB/HR	960
POLYMER DOSING SYSTEM	--	NEAT POLYMER SKID
POLYMER STORAGE	--	TOTE WITH CONTAINMENT SKID
SOLIDS CONVEYOR SYSTEM	--	BELT CONVEYOR
SOLIDS CONVEYOR DISCHARGE	--	BI-DIRECTIONAL SPLITTER

GEORGIA REGISTERED No. PE048849 PROFESSIONAL ENGINEER TRENTON K. HOLLIS

Sealed: June 26th, 2024

no.	date	by	ckd	description
0	6/26/24	TKH	ALW	ISSUED FOR CONSTRUCTION

BURNS McDONNELL
4004 SUMMIT BLVD. NE, SUITE 1200
ATLANTA, GA 30319
770-587-4776
LICENSEE NO. PEF000100
AUTHORIZATION NO. J550903

date: APRIL 24, 2023
detailed: J. BENTRUP
designed: T. HOLLIS
checked: A. WADDOUPS

Perry
HOUSTON COUNTY, GEORGIA

EAST PERRY WWTF
DESIGN CRITERIA

project: 148538
contract:
drawing: 100D603 – rev. 0
sheet of sheets
file 148538_HYDRAULIC PROFILE_2022.rvt

VALVE SCHEDULE

XX VALVE TAG

NO	DESCRIPTION	TAG	SIZE	END...	ACTUATOR TYPE
1	PROCESS RETURN PUMP 1 INFLUENT PLUG VALVE	PR-PV-101	10"	FL X FL	HANDWHEEL
2	PROCESS RETURN PUMP 1 EFFLUENT PLUG VALVE	PR-PV-102	10"	FL X FL	CHAINWHEEL
3	PROCESS RETURN PUMP 1 CHECK VALVE	PR-CV-101	10"	FL X FL	-
4	PROCESS RETURN PUMP 2 INFLUENT PLUG VALVE	PR-PV-201	10"	FL X FL	HANDWHEEL
5	PROCESS RETURN PUMP 2 EFFLUENT PLUG VALVE	PR-PV-202	10"	FL X FL	CHAINWHEEL
6	PROCESS RETURN PUMP 2 CHECK VALVE	PR-CV-201	10"	FL X FL	-
7	PROCESS RETURN PUMP 3 INFLUENT PLUG VALVE	PR-PV-301	10"	FL X FL	HANDWHEEL
8	PROCESS RETURN PUMP 3 EFFLUENT PLUG VALVE	PR-PV-302	10"	FL X FL	CHAINWHEEL
9	PROCESS RETURN AIR RELEASE VALVE	PR-ARV-101	2"	TAP	AUTOMATIC
10	RETURN ACTIVATED SLUDGE FROM CLARIFIER A	RAS-PV-101	12"	FL X FL	HANDWHEEL
11	RETURN ACTIVATED SLUDGE FROM CLARIFIER B	RAS-PV-102	12"	FL X FL	HANDWHEEL
12	RETURN ACTIVATED SLUDGE PUMPS 1/2 ISOLATION	RAS-PV-103	12"	FL X FL	HANDWHEEL
13	RETURN ACTIVATED SLUDGE PUMPS 2/3 ISOLATION	RAS-PV-104	12"	FL X FL	HANDWHEEL
14	RETURN ACTIVATED SLUDGE PUMP 1 INFLUENT PLUG VALVE	RAS-PV-401	10"	FL X FL	HANDWHEEL
15	RETURN ACTIVATED SLUDGE PUMP 1 EFFLUENT PLUG VALVE	RAS-PV-411	10"	FL X FL	CHAINWHEEL
16	RETURN ACTIVATED SLUDGE PUMP 1 CHECK VALVE	RAS-CV-401	10"	FL X FL	-
17	RETURN ACTIVATED SLUDGE PUMP 2 INFLUENT PLUG VALVE	RAS-PV-402	10"	FL X FL	HANDWHEEL
18	RETURN ACTIVATED SLUDGE PUMP 2 EFFLUENT PLUG VALVE	RAS-PV-412	10"	FL X FL	CHAINWHEEL
19	RETURN ACTIVATED SLUDGE PUMP 2 CHECK VALVE	RAS-CV-402	10"	FL X FL	-
20	RETURN ACTIVATED SLUDGE PUMP 3 INFLUENT PLUG VALVE	RAS-PV-403	10"	FL X FL	HANDWHEEL
21	RETURN ACTIVATED SLUDGE PUMP 3 EFFLUENT PLUG VALVE	RAS-PV-413	10"	FL X FL	CHAINWHEEL
22	RETURN ACTIVATED SLUDGE PUMP 3 CHECK VALVE	RAS-CV-403	10"	FL X FL	-
23	RETURN ACTIVATED SLUDGE AIR RELEASE VALVE	RAS-ARV-101	2"	TAP	AUTOMATIC
24	RETURN ACTIVATED SLUDGE DISCHARGE ISOLATION PLUG VALVE	RAS-PV-421	14"	FL X FL	CHAINWHEEL
25	WASTE ACTIVATED SLUDGE SUCTION HEADER ISOLATION PLUG...	WAS-PV-101	6"	FL X FL	HANDWHEEL
26	WASTE ACTIVATED SLUDGE PUMP 1 INFLUENT PLUG VALVE	WAS-PV-421	6"	FL X FL	HANDWHEEL
27	WASTE ACTIVATED SLUDGE PUMP 1 EFFLUENT PLUG VALVE	WAS-PV-102	6"	FL X FL	HANDWHEEL
28	WASTE ACTIVATED SLUDGE PUMP 1 CHECK VALVE	WAS-CV-421	6"	FL X FL	-
29	WASTE ACTIVATED SLUDGE PUMP 2 INFLUENT PLUG VALVE	WAS-PV-423	6"	FL X FL	HANDWHEEL
30	WASTE ACTIVATED SLUDGE PUMP EFFLUENT PLUG VALVE	WAS-PV-424	6"	FL X FL	HANDWHEEL
31	WASTE ACTIVATED SLUDGE PUMP 2 CHECK VALVE	WAS-CV-422	6"	FL X FL	-
32	WASTE ACTIVATED SLUDGE AIR RELEASE VALVE	WAS-ARV-...	2"	TAP	AUTOMATIC
33	CLARIFIER SCUM PUMP INFLUENT PLUG VALVE	SCM-PV-441	6"	FL X FL	HANDWHEEL
34	CLARIFIER SCUM PUMP EFFLUENT PLUG VALVE	SCM-PV-442	6"	FL X FL	HANDWHEEL
35	CLARIFIER SCUM PUMP CHECK VALVE	SCM-CV-441	6"	FL X FL	-
36	CLARIFIER SCUM TO WAS PLUG VALVE	SCM-PV-401	6"	FL X FL	HANDWHEEL
37	CLARIFIER SCUM TO WAS CHECK VALVE	SCM-CV-401	6"	FL X FL	-
38	AERATION BLOWER 1 BUTTERFLY VALVE	AER-BFV-621	8"	FL X FL	HANDWHEEL
39	AERATION BLOWER 2 BUTTERFLY VALVE	AER-BFV-622	8"	FL X FL	HANDWHEEL
40	AERATION BLOWERS PROCESS BASIN 1 BUTTERFLY VALVE	AER-BFV-626	10"	FL X FL	CHAINWHEEL
41	AERATION BLOWERS PROCESS BASIN 2 BUTTERFLY VALVE	AER-BFV-627	10"	FL X FL	CHAINWHEEL
42	SOLIDS HANDLING BLOWER 1 BUTTERLY VALVE	AER-BFV-624	8"	FL X FL	HANDWHEEL
43	SOLIDS HANDLING BLOWER 2 BUTTERLY VALVE	AER-BFV-625	8"	FL X FL	HANDWHEEL
44	SOLIDS HANDLING BLOWERS SOLIDS BASIN 1 ISOLATION...	AER-BFV-628	10"	FL X FL	CHAINWHEEL
45	SOLIDS HANDLING BLOWERS SOLIDS BASIN 2 ISOLATION...	AER-BFV-629	10"	FL X FL	CHAINWHEEL
46	SWING BLOWER BUTTERFLY VALVE	AER-BFV-623	8"	FL X FL	HANDWHEEL
47	SWING BLOWER TO PROCESS BASIN BUTTERFLY VALVE	AER-BFV-630	10"	FL X FL	CHAINWHEEL
48	SWING BLOWER TO SOLIDS HANDLING BASIN BUTTERFLY VALVE	AER-BFV-631	10"	FL X FL	CHAINWHEEL
49	AEROBIC TRAIN 1 ZONE 1 AERATION BUTTERFLY VALVE	AER-BFV-361	8"	FL X FL	HANDWHEEL
50	AEROBIC TRAIN 2 ZONE 1 AERATION BUTTERFLY VALVE	AER-BFV-362	8"	FL X FL	HANDWHEEL
51	AEROBIC TRAIN 1 ZONE 2 AERATION BUTTERFLY VALVE	AER-BFV-363	8"	FL X FL	HANDWHEEL
52	AEROBIC TRAIN 2 ZONE 2 AERATION BUTTERFLY VALVE	AER-BFV-364	8"	FL X FL	HANDWHEEL
53	SOLIDS HOLDING TANK BASIN 1 PLUG VALVE	SOL-PV-901	6"	FL X FL	HANDWHEEL
54	SOLIDS HOLDING TANK BASIN 1 TELESCOPING VALVE	SOL-TV-901	4"	FL	OFFSET...
55	SOLIDS HOLDING TANK BASIN 1 AERATION BUTTERFLY VALVE	SOL-BFV-901	8"	FL X FL	HANDWHEEL
56	SOLIDS HOLDING TANK BASIN 2 PLUG VALVE	SOL-PV-902	6"	FL X FL	HANDWHEEL
57	SOLIDS HOLDING TANK BASIN 2 TELESCOPING VALVE	SOL-TV-902	4"	FL	OFFSET...
58	SOLIDS HOLDING TANK BASIN 2 AERATION BUTTERFLY VALVE	SOL-BFV-902	8"	FL X FL	HANDWHEEL
59	SOLIDS HOLDING TANK 1 DISCHARGE PLUG VALVE	SOL-PV-911	6"	FL X FL	HANDWHEEL
60	SOLIDS HOLDING TANK 2 DISCHARGE PLUG VALVE	SOL-PV-912	6"	FL X FL	HANDWHEEL
61	SOLIDS HANDLING PUMPS SUCTION HEADERS ISOLATION PLUG...	SOL-PV-913	6"	FL X FL	HANDWHEEL
62	SOLIDS HANDLING PUMP 1 INFLUENT PLUG VALVE	SOL-PV-921	6"	FL X FL	HANDWHEEL
63	SOLIDS HANDLING PUMP 1 EFFLUENT PLUG VALVE	SOL-PV-922	6"	FL X FL	HANDWHEEL
64	SOLIDS HANDLING PUMP 1 CHECK VALVE	SOL-CV-901	6"	FL X FL	-
65	SOLIDS HANDLING PUMP 2 INFLUENT PLUG VALVE	SOL-PV-923	6"	FL X FL	HANDWHEEL
66	SOLIDS HANDLING PUMP 2 EFFLUENT PLUG VALVE	SOL-PV-924	6"	FL X FL	HANDWHEEL
67	SOLIDS HANDLING PUMP 2 CHECK VALVE	SOL-CV-902	6"	FL X FL	-
68	SOLIDS HANDLING PUMP DISCHARGE TO BELT PRESS 1 PLUG...	SOL-PV-925	8"	FL X FL	HANDWHEEL
69	BELT PRESS WASH WATER PUMP INFLUENT BALL VALVE	BP-BV-801	2"	THREADED	LEVER
70	BELT PRESS WASH WATER PUMP EFFLUENT BALL VALVE	BP-BV-802	2"	THREADED	LEVER
71	BELT FILTER PRESS POLYMER BALL VALVE	BP-BV-841	1"	THREADED	LEVER
72	NON-POTABLE WATER SKID BLADDER TANK ISOLATION BALL...	NPW-BV-001	4"	FL X FL	LEVER
73	NON-POTABLE WATER SKID BLADDER TANK ISOLATION BALL...	NPW-BV-002	4"	FL X FL	LEVER
74	NON-POTABLE WATER PUMP 1 BALL VALVE	NPW-BV-021	4"	FL X FL	LEVER
75	NON-POTABLE WATER PUMP 1 CHECK VALVE	NPW-CV-021	4"	FL X FL	LEVER
76	NON-POTABLE WATER PUMP 1 AIR RELEASE VALVE	NPV-ARW-...	4"	FL X FL	LEVER
77	NON-POTABLE WATER PUMP 2 BALL VALVE	NPW-BV-022	4"	FL X FL	LEVER
78	NON-POTABLE WATER PUMP 2 CHECK VALVE	NPW-CV-022	4"	FL X FL	LEVER
79	NON-POTABLE WATER PUMP 2 AIR RELEASE VALVE	NPV-ARW-...	4"	FL X FL	LEVER
80	ALUM DOSING TOTE DISCHARGE BALL VALVE	ALM-BV-501	1"	THREADED	LEVER
81	ALUM DOSING PUMP SKID INFLUENT BALL VALVE	ALM-BV-502	1"	THREADED	LEVER
82	ALUM DOSING PUMP 1 INFLUENT BALL VALVE	ALM-BV-503	0.5"	THREADED	LEVER
83	ALUM DOSING PUMP 1 EFFLUENT BALL VALVE	ALM-BV-504	0.5"	THREADED	LEVER
84	ALUM DOSING PUMP 2 INFLUENT BALL VALVE	ALM-BV-505	0.5"	THREADED	LEVER
85	ALUM DOSING PUMP 2 EFFLUENT BALL VALVE	ALM-BV-506	0.5"	THREADED	LEVER
86	ALUM DOSING PUMP SKID EFFLUENT BALL VALVE	ALM-BV-507	0.5"	THREADED	LEVER
87	ALUM DOSING PUMP SKID CALIBRATION COLUMN BALL VALVE	ALM-BV-508	0.5"	THREADED	LEVER
88	ALUM DOSING PUMP SKID BALL VALVE	ALM-BV-509	0.5"	THREADED	LEVER
89	ALUM DOSING PUMP SKID BALL VALVE	ALM-BV-510	0.5"	THREADED	LEVER
90	LARGE BUBBLE COMPRESSOR 1 AIR DRYER INFLUENT BALL VALVE	AER-BV-331	1"	THREADED	LEVER
91	LARGE BUBBLE COMPRESSOR 2 AIR DRYER INFLUENT BALL VALVE	AER-BV-332	1"	THREADED	LEVER
92	LARGE BUBBLE COMPRESSOR 1 AIR DRYER EFFLUENT BALL VALVE	AER-BV-333	1"	THREADED	LEVER
93	LARGE BUBBLE COMPRESSOR 2 AIR DRYER EFFLUENT BALL VALVE	AER-BV-334	1"	THREADED	LEVER
94	LARGE BUBBLE AIR RECEIVER TANK INFLUENT BALL VALVE	AER-BV-335	1"	THREADED	LEVER
95	LARGE BUBBLE COMPRESSED AIR EXTERNAL CONNECTION BALL...	AER-BV-336	1"	THREADED	LEVER
96	LARGE BUBBLE AIR RECEIVER TANK PRESSURE INDICATOR BALL...	AER-BV-337	1"	THREADED	LEVER
97	LARGE BUBBLE AIR RECEIVER TANK EFFLUENT BALL VALVE	AER-BV-338	1.5"	THREADED	LEVER
98	LARGE BUBBLE AIR RECEIVER TANK AUTO DRAIN ISOLATION BAL...	AER-BV-339	1"	THREADED	LEVER
99	LARGE BUBBLE AIR RECEIVER TANK AUTO DRAIN VALVE BYPASS...	AER-BV-340	1"	THREADED	LEVER
100	LARGE BUBBLE AIR RECEIVER TANK AUTO DRAIN VALVE	AER-SV-101	1"	THREADED	AUTOMATIC
101	LARGE BUBBLE MIXING PANEL INFLUENT BALL VALVE	AER-BV-300	1.5"	THREADED	LEVER
102	LARGE BUBBLE ANAEROBIC TRAIN 1 ZONE 1 BALL VALVE	AER-BV-301	1"	THREADED	LEVER
103	LARGE BUBBLE ANAEROBIC TRAIN 1 ZONE 2 BALL VALVE	AER-BV-302	1"	THREADED	LEVER
104	LARGE BUBBLE ANOXIC TRAIN 1 ZONE 1 BALL VALVE	AER-BV-303	1"	THREADED	LEVER
105	LARGE BUBBLE ANOXIC TRAIN 1 ZONE 2 BALL VALVE	AER-BV-304	1"	THREADED	LEVER
106	LARGE BUBBLE ANAEROBIC TRAIN 2 ZONE 1 BALL VALVE	AER-BV-305	1"	THREADED	LEVER
107	LARGE BUBBLE ANAEROBIC TRAIN 2 ZONE 2 BALL VALVE	AER-BV-306	1"	THREADED	LEVER
108	LARGE BUBBLE ANOXIC TRAIN 2 ZONE 1 BALL VALVE	AER-BV-307	1"	THREADED	LEVER
109	LARGE BUBBLE ANOXIC TRAIN 2 ZONE 2 BALL VALVE	AER-BV-308	1"	THREADED	LEVER
110	PROCESS RETURN ISOLATION PLUG VALVE	PR-PV-211	10"	FLANGED	CHAINWHEEL

EQUIPMENT SCHEDULE

XX EQUIPMENT TAG

NO	DESCRIPTION	EQUIPMENT TAG
1	MECHANICAL BAR SCREEN	HW-SCR-101
2	MANUAL BAR SCREEN	HW-SCR-102
3	SCREEN AUGER	HW-SAU-111
4	INFLUENT AUTOSAMPLER	HW-SAM-101
5	PROCESS BASIN TRAIN 1 INTERNAL RECYCLE PUMP	AB1-PMP-311
6	PROCESS BASIN TRAIN 2 INTERNAL RECYCLE PUMP	AB2-PMP-312
7	LARGE BUBBLE MIXING SYSTEM VALVE PANEL	400-MIX-002
8	LARGE BUBBLE MIXING SYSTEM AIR COMPRESSOR 1	AER-C-331
9	LARGE BUBBLE MIXING SYSTEM AIR COMPRESSOR 2	AER-C-332
10	LARGE BUBBLE MIXING SYSTEM AIR DRYER 1	AER-DRY-333
11	LARGE BUBBLE MIXING SYSTEM AIR DRYER 2	AER-DRY-334
12	LARGE BUBBLE MIXING SYSTEM AIR RECEIVER TANK	AER-TK-101
13	PROCESS BASIN TRAIN 1 BLOWER	AER-B-621
14	PROCESS BASIN TRAIN 2 BLOWER	AER-B-622
15	PROCESS BASIN/SOLIDS HANDLING BASIN SWING BLOWER	AER-B-623
16	SOLIDS HANDLING BASIN CELL 1 BLOWER	AER-B-624
17	SOLIDS HANDLING BASIN CELL 2 BLOWER	AER-B-625
18	PROCESS RETURN PUMP 1	PR-PMP-201
19	PROCESS RETURN PUMP 2	PR-PMP-202
20	PROCESS RETURN FLOW METER	PR-FE-211
21	RAS PUMP 1	RAS-PMP-401
22	RAS PUMP 2	RAS-PMP-402
23	CLARIFIER B RAS FLOW METER	RAS-FE-411
24	RAS DISCHARGE FLOW METER	RAS-FE-412
25	WAS PUMP 1	WAS-PMP-421
26	WAS PUMP 2	WAS-PMP-422
27	SCUM PUMP	SCM-PMP-441
28	WAS FLOW METER	WAS-FE-431
29	SECONDARY CLARIFIER A MECHANISM	CLA-SC-501
30	SECONDARY CLARIFIER B MECHANISM	CLA-SC-502
39	CHANNEL 1 UV DISINFECTION SYSTEM	UV-UVD-101
40	CHANNEL 2 UV DISINFECTION SYSTEM	UV-UVD-102
41	NON-POTABLE REUSE SYSTEM PUMP 1	UV-PMP-021

NO	DESCRIPTION	EQUIPMENT TAG
42	NON-POTABLE REUSE SYSTEM PUMP 2	UV-PMP-022
43	NON-POTABLE REUSE SYSTEM FLOW METER	UV-FE-002
44	NON-POTABLE REUSE SYSTEM BLADDER TANK	UV-T-001
45	EFFLUENT FLOW METER	UV-FE-001
46	EFFLUENT AUTOSAMPLER	UV-SAM-102
47	ALUM DOSING PUMP 1	ALM-PMP-101
48	ALUM DOSING PUMP 2	ALM-PMP-102
49	SOLIDS HANDLING PUMP 1	SOL-PMP-901
50	SOLIDS HANDLING PUMP 2	SOL-PMP-902
51	SOLIDS HANDLING BELT FILTER PRESS FLOW METER	SOL-FE-921
52	BELT FILTER PRESS	BP-BFP-821
53	BELT FILTER PRESS WASH WATER PUMP	BP-PMP-801
54	BELT FILTER PRESS WASH WATER PUMP FLOW METER	BP-FE-811
55	BELT FILTER PRESS POLYMER FEED PUMP	BP-PMP-841
56	BELT FILTER PRESS SOLIDS CONVEYOR	BP-CON-831
57	BELT FILTER PRESS AIR COMPRESSOR SKID	BP-C-841

FLAP GATE SCHEDULE

XX GATE TAG

MARK (EQUIPMENT TAG)	TAG	MATERIAL	DIAMETER (in)	LOCATION
74	AB1-FG-311	SS	10"	PROCESS BASIN A TRAIN 1 INTERNAL RECYCLE PUMP FLAP GATE
75	AB2-FG-312	SS	10"	PROCESS BASIN A TRAIN 2 INTERNAL RECYCLE PUMP FLAP GATE
76	SOL-FG-821	SS	12"	SOLIDS HANDLING BUILDING DRAIN LINE FLAP GATE

SLIDE GATE SCHEDULE

XX GATE TAG

MARK (EQUIPMENT...	TAG	MATERIAL	OPENING SIZE (WxH)	SLIDE CL. EL. (ft. msl)	MAX SEATING HEAD... (ft.)	MAX UNSEATING HEAD... (ft.)	OPERATING FLOOR... (ft. msl)	WALL THIMBLE TYPE	FRAME TYPE	MOUNTING STYLE...	MOUNTING STYLE...	OPERATOR TYPE	OPERATOR MOUNTING	FLUSH BOTTOM	RISING STEM
60	HW-SLG-...	SS	48"x78"	294.25'	3.25'	3.25'	297.50'	ABM	SC	W	IN	HW	YM	Y	Y
61	HW-SLG-...	SS	48"x78"	294.25'	3.25'	3.25'	297.50'	ABM	SC	W	IN	HW	YM	Y	Y
62	HW-SLG-...	SS	48"x78"	294.25'	3.25'	3.25'	297.50'	ABM	SC	W	W	HW	YM	Y	Y
63	HW-SLG-...	SS	48"x78"	294.25'	3.25'	3.25'	297.50'	ABM	SC	W	W	HW	YM	Y	Y
64	HW-PG-3...	SS	48"x48"	293.00'	2.00'	2.00'	297.50'	ABM	SC	IN	IN	P	N/A	Y	N/A
65	HW-PG-3...	SS	48"x48"	293.00'	2.00'	2.00'	297.50'	ABM	SC	IN	IN	P	N/A	Y	N/A
66	HW-PG-4...	SS	48"x78"	294.25'	3.25'	3.25'	297.50'	ABM	SC	EMB	EMB	P	N/A	Y	N/A
67	HW-PG-4...	SS	48"x78"	294.25'	3.25'	3.25'	297.50'	ABM	SC	EMB	EMB	P	N/A	Y	N/A
68	ANA1-SL...	SS	48"x36"	290.90'	1.50'	1.50'	291.75'	ABM	SC	W	W	HW	YM	Y	Y
69	ANA2-SL...	SS	48"x36"	290.90'	1.50'	1.50'	291.75'	ABM	SC	W	W	HW	YM	Y	Y
70	CLA-SLG-...	SS	72"x33"	288.13'	1.38'	1.38'	289.50'	ABM	SC	W	W	HW	YM	Y	Y
71	CLA-SLG-...	SS	72"x33"	288.13'	1.38'	1.38'	289.50'	ABM	SC	W	W	HW	YM	Y	Y
72	UV-SLG-1...	SS	40"x92"	276.16'	3.83'	3.83'	280.00'	ABM	SC	IN	W	HW	YM	Y	Y
73	UV-SLG-2...	SS	40"x92"	276.16'	3.83'	3.83'	280.00'	ABM	SC	W	IN	HW	YM	Y	Y

NOTES:

(1) MEASURED FROM CENTERLINE ELEVATION.

(2) GATE MANUFACTURER RESPONSIBLE FOR PROVIDING WALL THIMBLES.

SEE DRAWINGS FOR WALL THICKNESS. WALL THIMBLE ABBREVIATIONS:

F = FLANGED WITH WATER COLLAR AND PLAIN END

E = FLANGED WITH WATER COLLAR AND FLANGED END

FMJ = FLANGE AND MECHANICAL JOINT

ABM = ANCHOR BOLT MOUNTED, NO THIMBLE

(3) FRAME TYPE ABBREVIATIONS:

FB- = FLAT BACK

FL- = FLANGE

NSC = NON-SELF-CONTAINED

SC = SELF-CONTAINED

-R = RECTANGULAR

-C = CIRCULAR

(4) OPERATOR TYPE ABBREVIATIONS:

CO = CRANK OPERATED

HW = HANDWHEEL

E = ELECTRIC

P = PULL

(5) OPERATOR MOUNTING ABBREVIATIONS:

FS = FLOOR STAND

BGFS = BEVEL GEARED FLOOR STAND

YM = YOKE MOUNTED

BGBS = BEVEL GEARED, BENCH STAND

-WB = WALL BRACKET REQUIRED

(6) MOUNTING STYLE (BASED ON FLOW DIRECTION):

W = WALL/FACE-MOUNTED

EMB = EMBEDDED

IN = IN-CHANNEL MOUNT

GEORGIA REGISTERED No. PE048949 PROFESSIONAL ENGINEER TRENTON K. HOLLIS

Sealed: June 26th, 2024

no.	date	by	ckd	description
0	6/26/24	TKH	ALW	ISSUED FOR CONSTRUCTION

BURNS McDONNELL
4004 SUMMIT BLVD. NE, SUITE 1200
ATLANTA, GA 30319
770-587-4776
LICENSEE NO. PEF000100
AUTHORIZATION NO. J550903

date: APRIL 24, 2023
detailed: J. BENTRUP
designed: T. HOLLIS
checked: A. WADDOUPS

Perry

HOUSTON COUNTY, GEORGIA

EAST PERRY WWTF
EQUIPMENT AND VALVE SCHEDULES

project: 148538
contract:
drawing: 100D604
rev.: 0
sheet of sheets
file 148538_HYDRAULIC PROFILE_2022.rvt

Millimeters
Scale For Microfilming
Inches

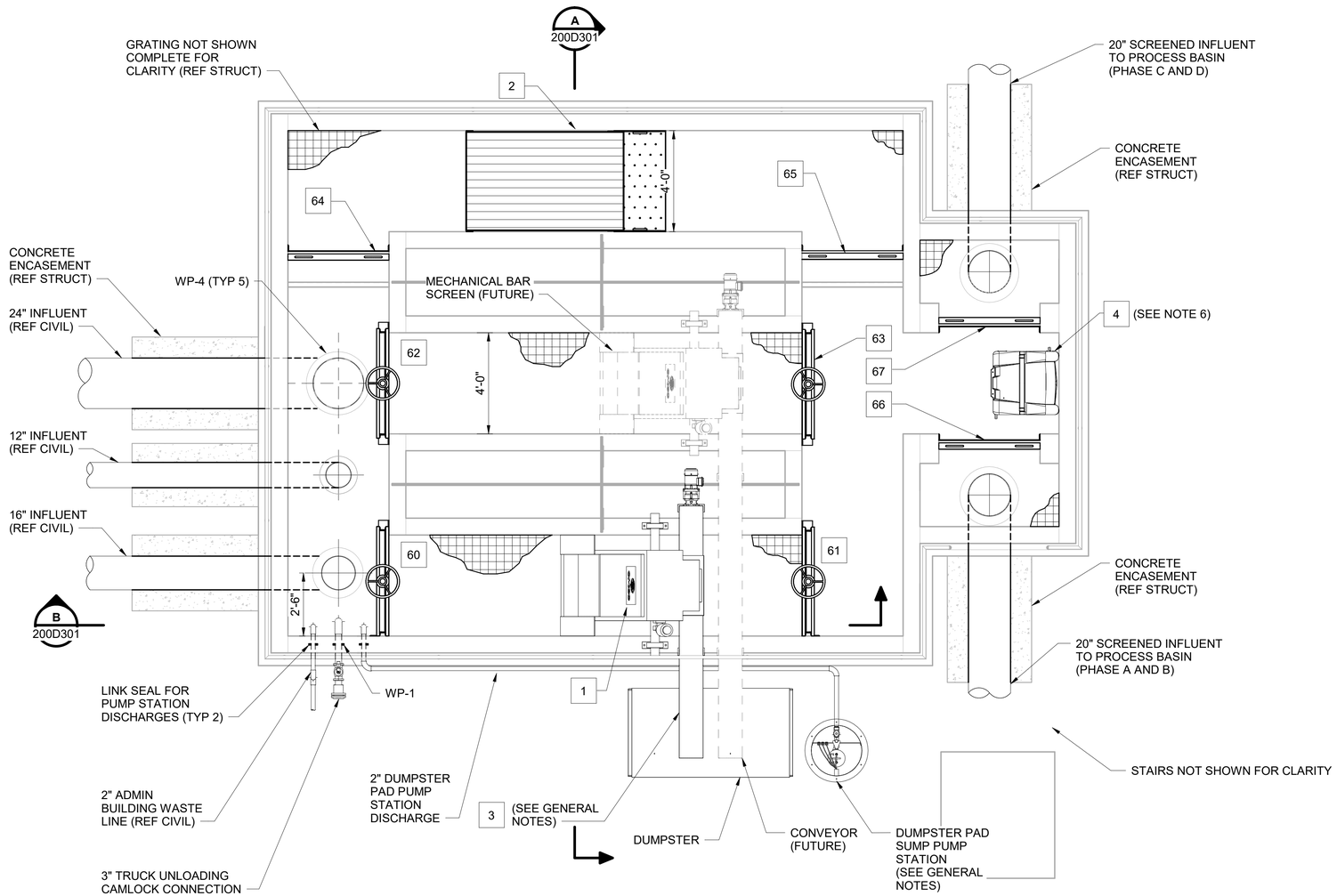

PLAN

0 2' 4' 6'
SCALE IN FEET

NORTH

GENERAL NOTES:

1. SCREENINGS CONVEYOR SHALL BE EQUIPPED WITH A BACK-PRESSURE COMPRESSION PLATE FOR SCREENINGS DISCHARGE COMPACTION.
2. PACKAGE GRINDER PUMP STATION SHALL BE ZOELLER SEWAGE EJECTOR SYSTEM MODEL 912-0005 OR OWNER-APPROVED EQUAL. SEE DUMPSTER PAD PUMP STATION DETAIL ON SHEET 100D503.
3. SEE SHEET 100D604 FOR EQUIPMENT AND VALVE IDENTIFICATION CALLOUTS.
4. LAYOUT REFLECTS EQUIPMENT FROM A SINGLE MANUFACTURER. CONTRACTOR TO COORDINATE INSTALLATION REQUIREMENTS FOR ACTUAL EQUIPMENT SELECTED.
5. CONCRETE ENCASE BURIED PIPE UNDER STRUCTURE, EXTEND 5 FT BEYOND EDGE OF BUILDING. REFERENCE STRUCTURAL FOR FURTHER DETAIL.
6. INFLUENT AUTO SAMPLER SHALL BE A HACH AS950 REFRIGERATED SAMPLER, OR OWNER-APPROVED EQUAL. FIELD ROUTE TUBING INTO WET WELL BENEATH EQUIPMENT PER SAMPLER MANUFACTURER'S RECOMMENDATION.
7. FIELD CONNECT DUMPSTER DRAIN TO SUMP PUMP STATION. COORDINATE WITH OPERATIONS GROUP FOR DUMPSTER DIMENSIONS.

no.	date	by	ckd	description
0	6/26/24	TKH	ALW	ISSUED FOR CONSTRUCTION

BURNS McDONNELL
4004 SUMMIT BLVD. NE, SUITE 1200
ATLANTA, GA 30319
770-587-4776
LICENSEE NO. PEF000100
AUTHORIZATION NO. J550903

date	detailed
APRIL 11, 2023	J. BENTRUP
designed	**checked**
T. HOLLIS	A. WADDOUPS

Perry
HOUSTON COUNTY, GEORGIA

EAST PERRY WWTF
HEADWORKS
PLAN

project	contract
148538	

drawing	rev.
200D101 –	0

sheet of sheets
file 148538_D_HEADWORKS_2022.rvt

GEORGIA REGISTERED No. PE048949 PROFESSIONAL ENGINEER TRENTON K. HOLLIS

Sealed: June 26th, 2024

Scale For Microfilming: Millimeters / Inches

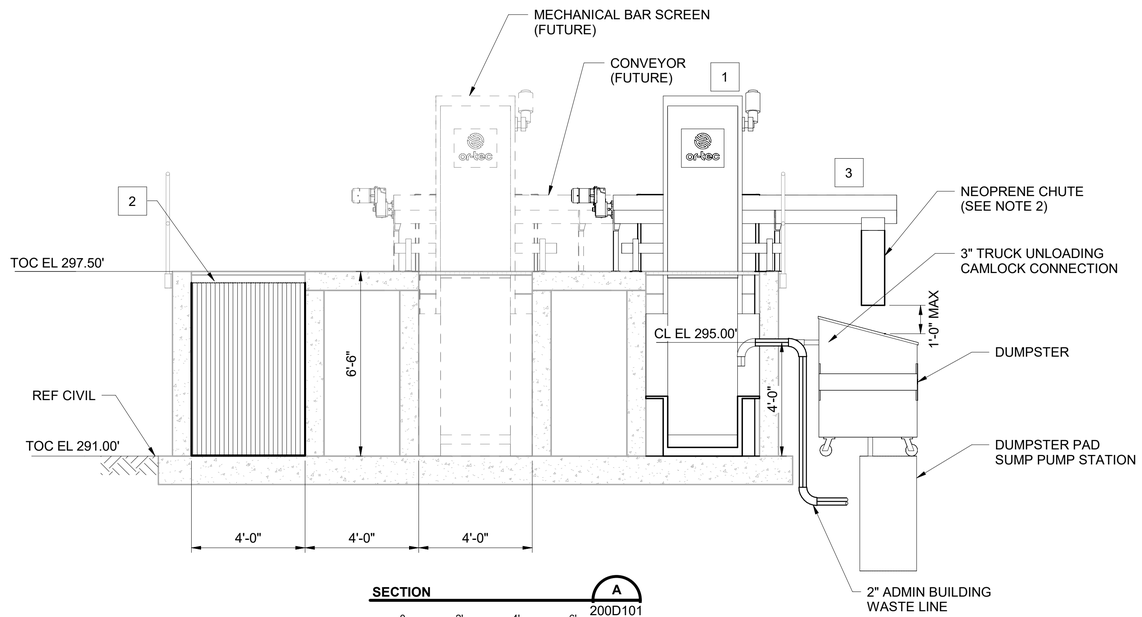

SECTION A 200D101

0 2' 4' 6'
SCALE IN FEET

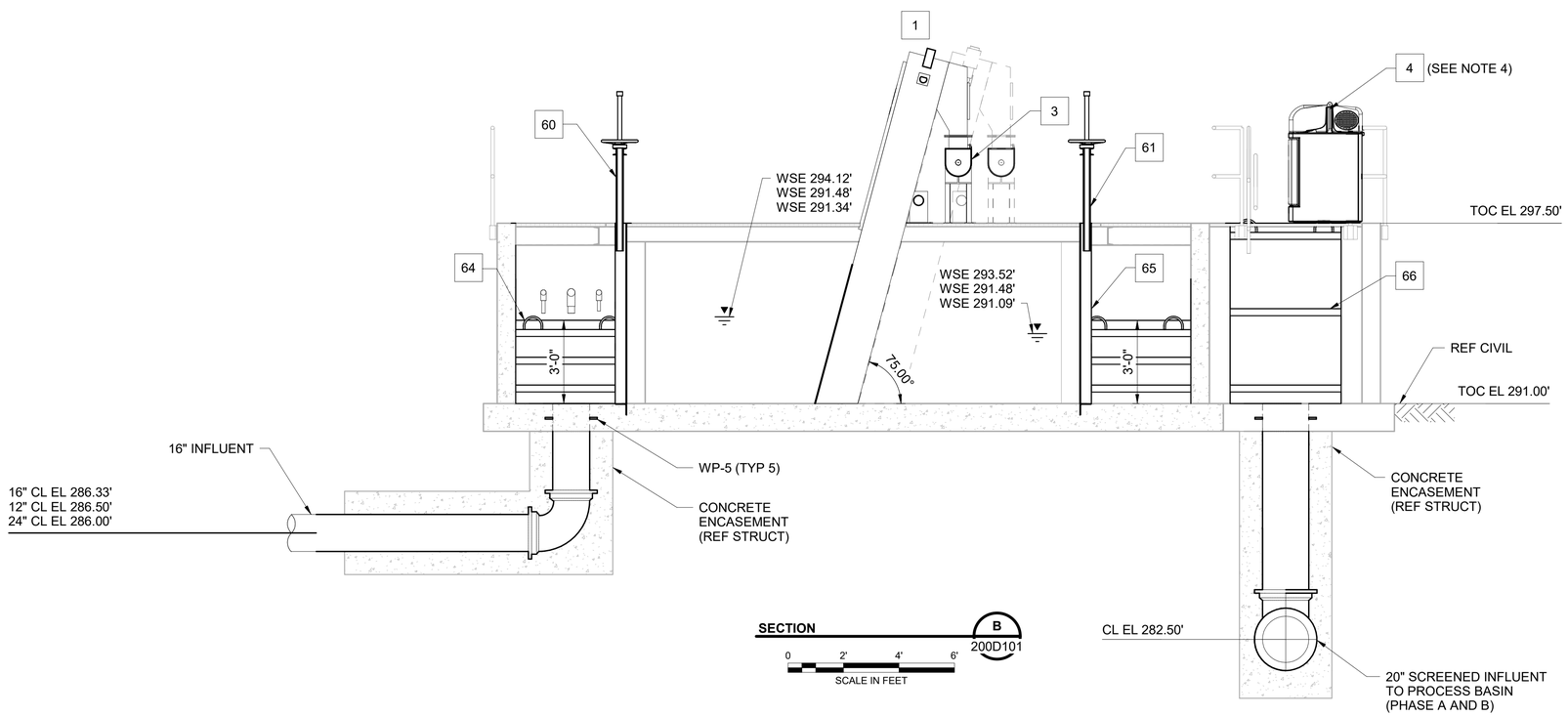

SECTION B 200D101

0 2' 4' 6'
SCALE IN FEET

GENERAL NOTES:

1. SEE SHEET 100D604 FOR EQUIPMENT IDENTIFICATION CALLOUTS.
2. SCREENING CONVEYOR SHALL BE COMPLETE WITH NEOPRENE CHUTE TO CONVEY SCREENING INTO DUMSTER. COORDINATE WITH CONVEYOR MANUFATURER AND OWNER FOR DUMPSTER HEIGHT.
3. SEE SHEET 100D604 FOR EQUIPMENT AND VALVE IDENTIFICATION CALLOUTS.
4. LAYOUT REFLECTS EQUIPMENT FROM A SINGLE MANUFATURER. CONTRACTOR TO COORDINATE INSTALLATION REQUIREMENTS FOR ACTUAL EQUIPMENT SELECTED.
5. CONCRETE ENCASE BURIED PIPE UNDER STRUCTURE, EXTEND 5 FT BEYOND EDGE OF BUILDING. ENCASEMENT SHOWN FOR CLARITY. REFERENCE STRUCTURAL FOR DESIGN.
6. INFLUENT AUTO SAMPLER SHALL BE A HACH AS950 REFRIGERATED SAMPLER, OR OWNER-APPROVED EQUAL. FIELD ROUTE TUBING INTO WET WELL BENEATH EQUIPMENT PER SAMPLER MANUFACTURER'S RECOMMENDATION.

no.	date	by	ckd	description
0	6/26/24	TKH	ALW	ISSUED FOR CONSTRUCTION

GEORGIA REGISTERED No. PE048949 PROFESSIONAL ENGINEER TRENTON K. HOLLIS

Sealed: June 26th, 2024

BURNS McDONNELL
4004 SUMMIT BLVD. NE, SUITE 1200
ATLANTA, GA 30319
770-587-4776
LICENSEE NO. PEF000100
AUTHORIZATION NO. J550903

date	detailed
JULY 31, 2023	J. BENTRUP
designed	**checked**
T. HOLLIS	A. WADDOUPS

Perry

HOUSTON COUNTY, GEORGIA

EAST PERRY WWTF
HEADWORKS
SECTIONS

project	contract
148538	

drawing 200D301 — **rev.** 0

sheet **of** **sheets**

file 148538_D_HEADWORKS_2022.rvt

no.	date	by	ckd	description
0	6/26/24	TKH	ALW	ISSUED FOR CONSTRUCTION

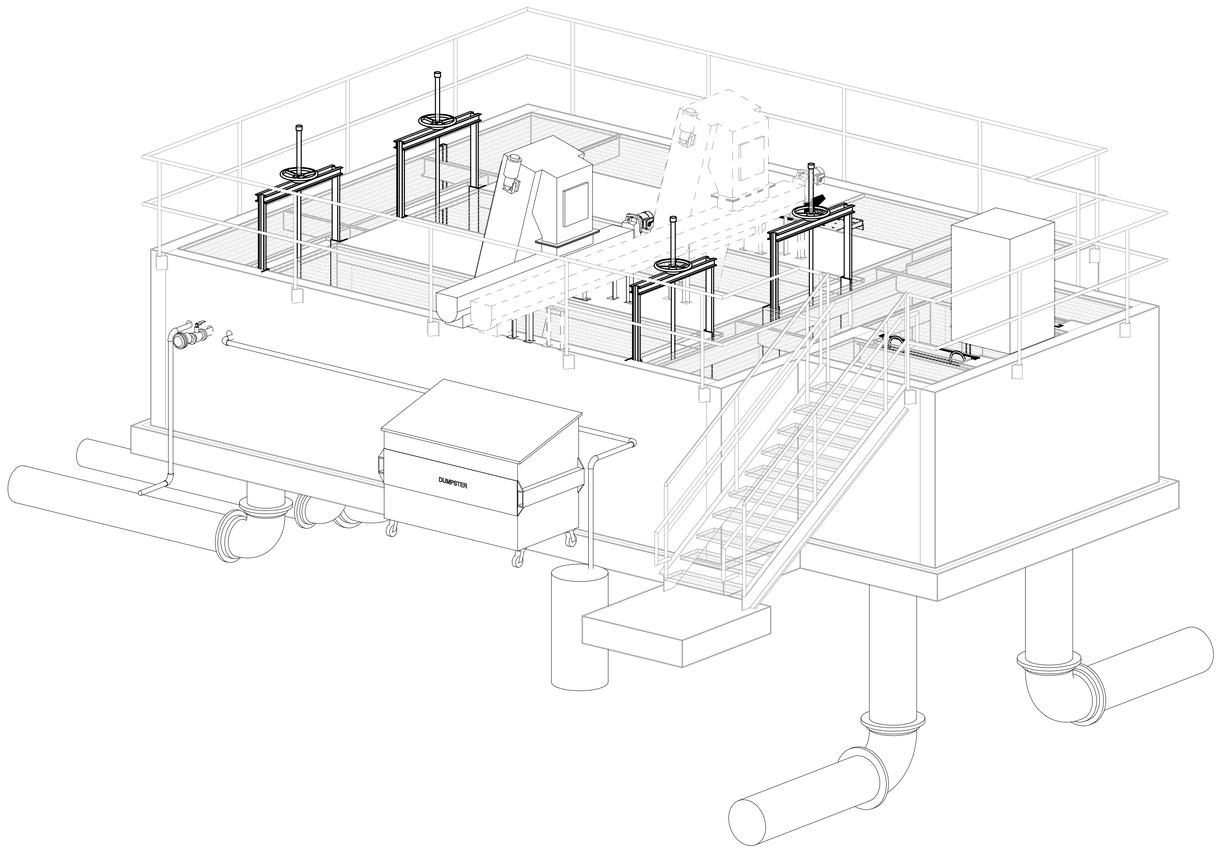

HEADWORKS ISOMETRIC

0 2' 4' 6'
SCALE IN FEET

UP
N E
W S
DN

BURNS McDONNELL
4004 SUMMIT BLVD. NE, SUITE 1200
ATLANTA, GA 30319
770-587-4776
LICENSEE NO. PEF000100
AUTHORIZATION NO. J550903

date	detailed
APRIL 11, 2023	J. BENTRUP
designed	**checked**
T. HOLLIS	A. WADDOUPS

Perry

HOUSTON COUNTY, GEORGIA

EAST PERRY WWTF
HEADWORKS
ISOMETRIC

project	contract
148538	

drawing 200D701 – **rev.** 0

sheet **of** **sheets**

file 148538_D_HEADWORKS_2022.rvt

GEORGIA REGISTERED No. PE048949 PROFESSIONAL ENGINEER TRENTON K. HOLLIS

Sealed: June 26th, 2024

Millimeters
Scale For Microfilming
Inches

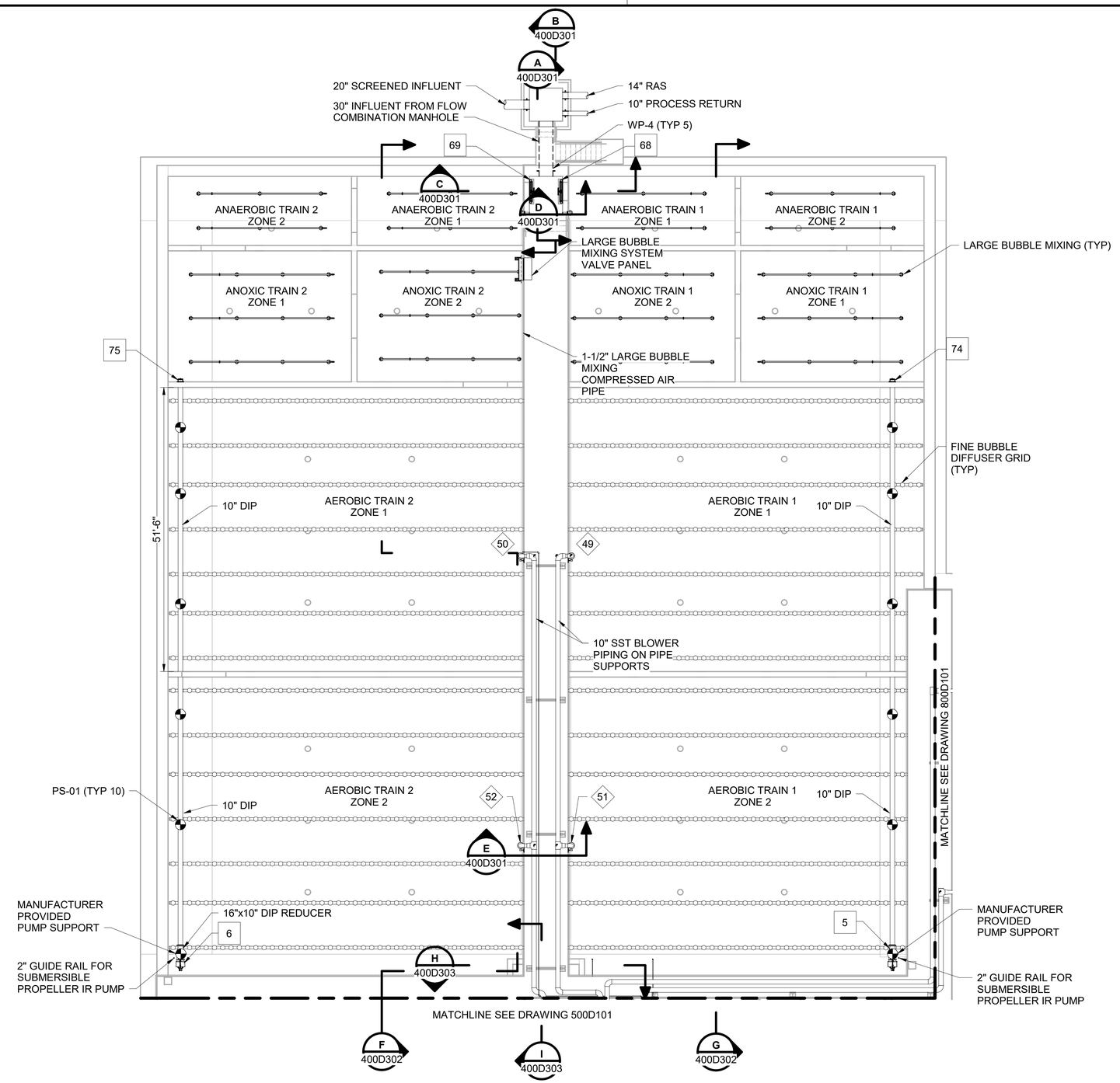

PLAN

0 8' 16' 24'

SCALE IN FEET

NORTH

no.	date	by	ckd	description
0	6/26/24	TKH	ALW	ISSUED FOR CONSTRUCTION

BURNS McDONNELL
4004 SUMMIT BLVD. NE, SUITE 1200
ATLANTA, GA 30319
770-587-4776
LICENSEE NO. PEF000100
AUTHORIZATION NO. J550903

date	detailed
APRIL 11, 2023	J. BENTRUP
designed	**checked**
T. HOLLIS	A. WADDOUPS

Perry

HOUSTON COUNTY, GEORGIA

EAST PERRY WWTF

PROCESS BASIN A

PLAN

project	contract
148538	

drawing 400D101 — **rev.** 0

sheet **of** **sheets**

file 148538_D_PROCESS_2022.rvt

GEORGIA REGISTERED No. PE048949 PROFESSIONAL ENGINEER TRENTON K. HOLLIS

Sealed: June 26th, 2024

GENERAL NOTES:

1. FIELD ROUTE COMPRESSED AIR LINES FROM COMPRESSED AIR SYSTEM TO LARGE BUBBLE MIXING PANEL AND FROM MIXING PANEL TO DROPLEGS IN EACH ZONE. CONTRACTOR SHALL SUPPORT PIPE AS REQUIRED.
2. FIELD ROUTE BLOWER PIPING FROM HEADER TO DROPLEGS IN EACH ZONE.
3. INSTALL LARGE BUBBLE MIXING GRIDS PER MANUFACUTER REQUIREMENTS.
4. INSTALL FINE BUBBLE DIFFUSER GRIDS PER MANUFACTURER REQUIREMENTS.

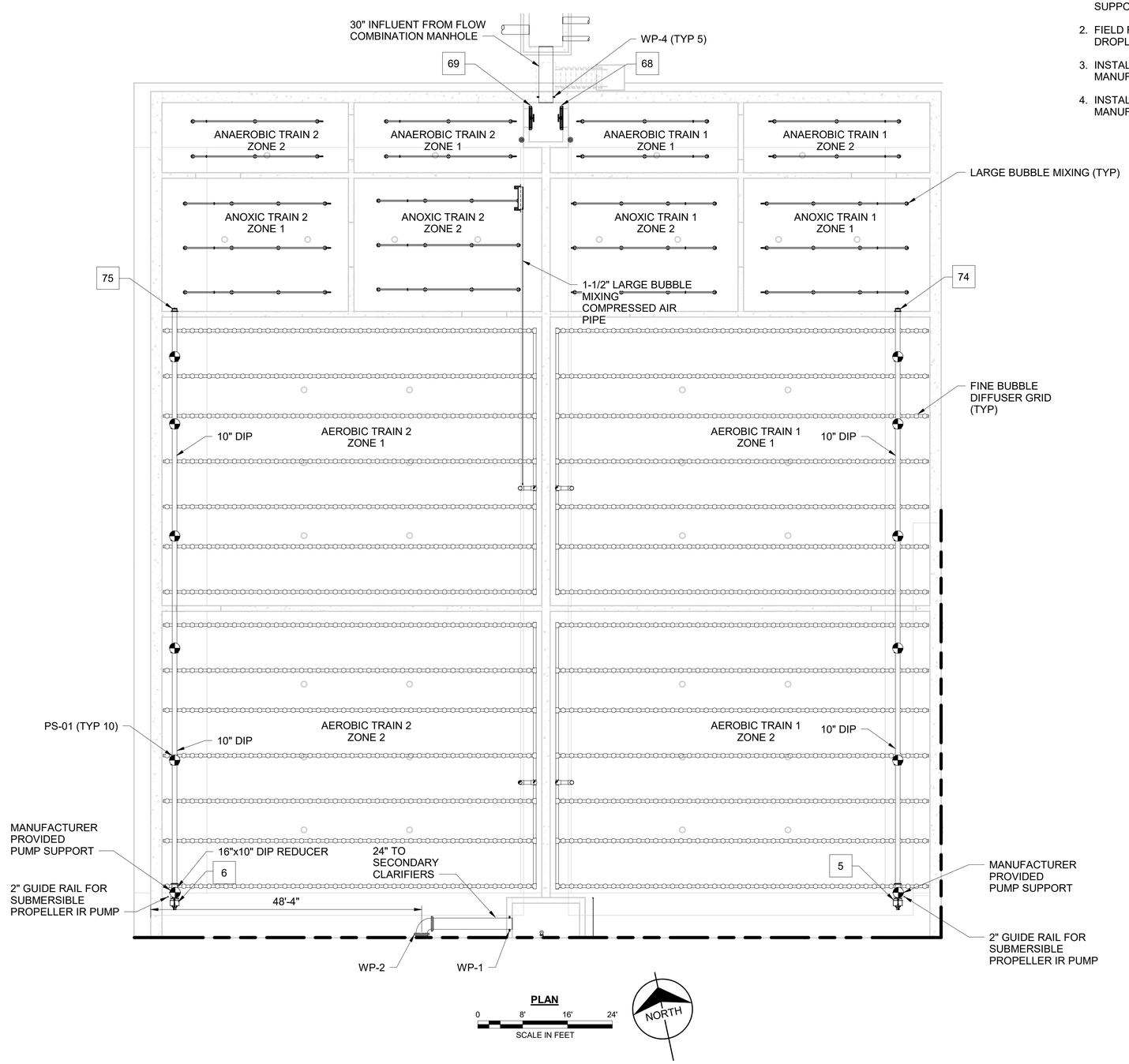

PLAN

0 8' 16' 24'
SCALE IN FEET

NORTH

no.	date	by	ckd	description
0	6/26/24	TKH	ALW	ISSUED FOR CONSTRUCTION

BURNS McDONNELL
4004 SUMMIT BLVD. NE, SUITE 1200
ATLANTA, GA 30319
770-587-4776
LICENSEE NO. PEF000100
AUTHORIZATION NO. J550903

date	detailed
APRIL 11, 2023	J. BENTRUP
designed	**checked**
T. HOLLIS	A. WADDOUPS

Perry
HOUSTON COUNTY, GEORGIA

EAST PERRY WWTF
PROCESS BASIN A
PLAN @ EL 289.00'

project	contract
148538	

drawing **400D102** – rev. **0**

sheet of sheets

file 148538_D_PROCESS_2022.rvt

GEORGIA REGISTERED No. PE048949 PROFESSIONAL ENGINEER TRENTON K. HOLLIS

Sealed: June 26th, 2024

Millimeters
Scale For Microfilming
Inches

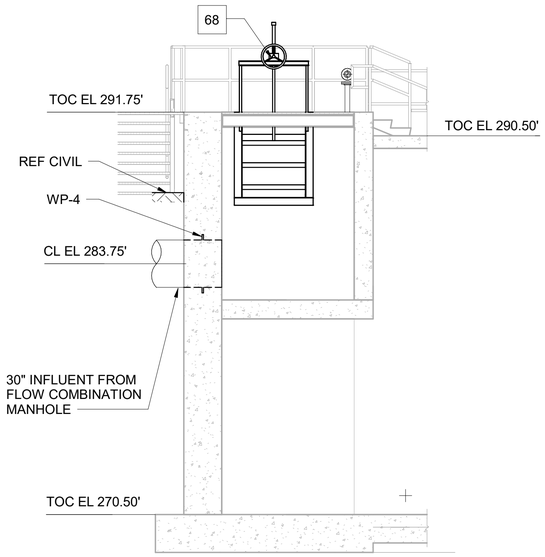

SECTION A 400D101

0 2' 4' 8'
SCALE IN FEET

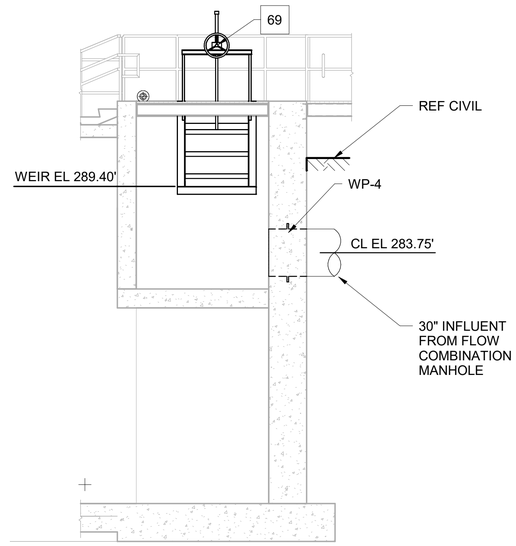

SECTION B 400D101

0 2' 4' 8'
SCALE IN FEET

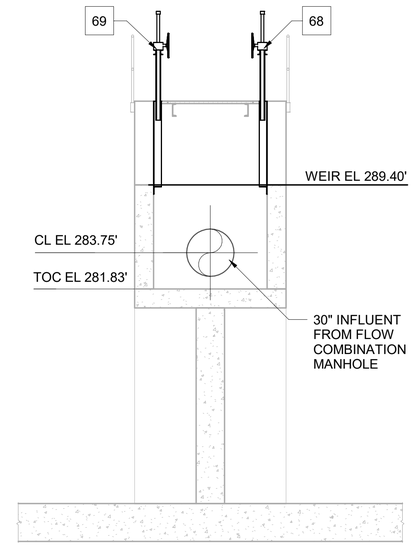

SECTION C 400D101

0 2' 4' 8'
SCALE IN FEET

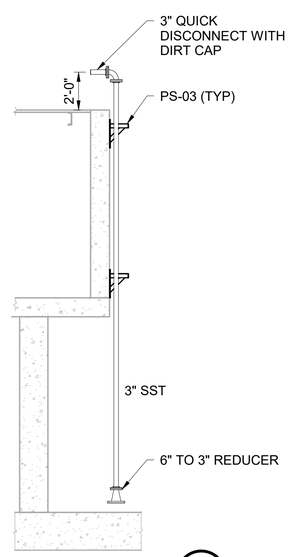

SECTION D 400D101

0 2' 4' 8'
SCALE IN FEET

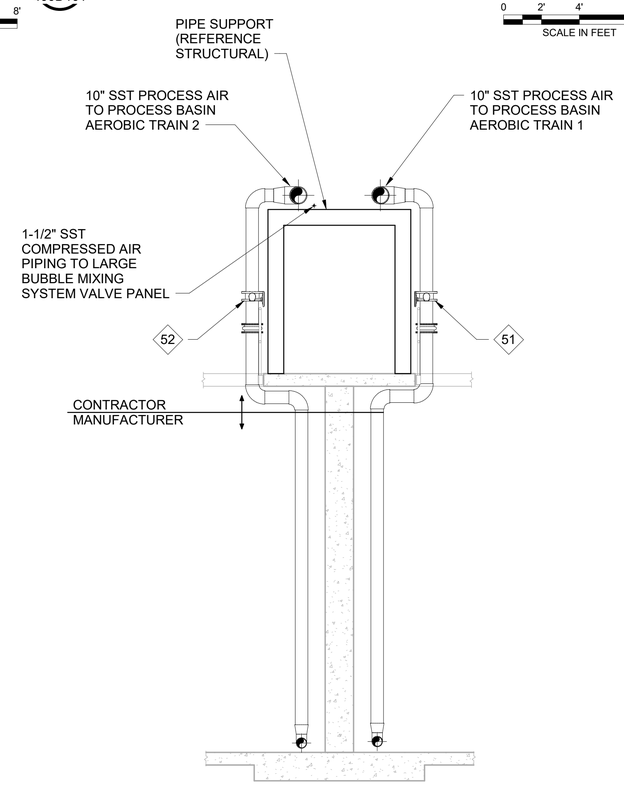

SECTION E 400D101

0 2' 4' 8'
SCALE IN FEET

GENERAL NOTES:

1. DELINEATION OF CONTRACTOR AND MANUFACTURER SHOWN IS FOR SCOPE OF SUPPLY ONLY. CONTRACTOR SHALL BE RESPONSIBLE FOR INSTALLATION.

no.	date	by	ckd	description
0	6/26/24	TKH	ALW	ISSUED FOR CONSTRUCTION

BURNS McDONNELL
4004 SUMMIT BLVD. NE, SUITE 1200
ATLANTA, GA 30319
770-587-4776
LICENSEE NO. PEF000100
AUTHORIZATION NO. J550903

date	detailed
AUGUST 2, 2023	J. BENTRUP
designed	**checked**
T. HOLLIS	A. WADDOUPS

Perry

HOUSTON COUNTY, GEORGIA

EAST PERRY WWTF
PROCESS BASIN A
SECTIONS SHEET 1

project	contract
148538	

drawing **400D301** – rev. **0**

sheet of sheets

file 148538_D_PROCESS_2022.rvt

GEORGIA REGISTERED No. PE048949 PROFESSIONAL ENGINEER TRENTON K. HOLLIS

Sealed: June 26th, 2024

GENERAL NOTES:

1. FIELD ROUTE COMPRESSED AIR LINES FROM COMPRESSED AIR SYSTEM TO LARGE BUBBLE MIXING PANEL AND FROM MIXING PANEL TO DROPLEGS IN EACH ZONE. CONTRACTOR SHALL SUPPORT PIPE AS REQUIRED.
2. FIELD ROUTE BLOWER PIPING FROM HEADER TO DROPLEGS IN EACH ZONE.
3. DELINEATION OF CONTRACTOR AND MANUFACTURER SHOWN IS FOR SCOPE OF SUPPLY ONLY. CONTRACTOR SHALL BE RESPONSIBLE FOR INSTALLATION.

no.	date	by	ckd	description
0	6/26/24	TKH	ALW	ISSUED FOR CONSTRUCTION

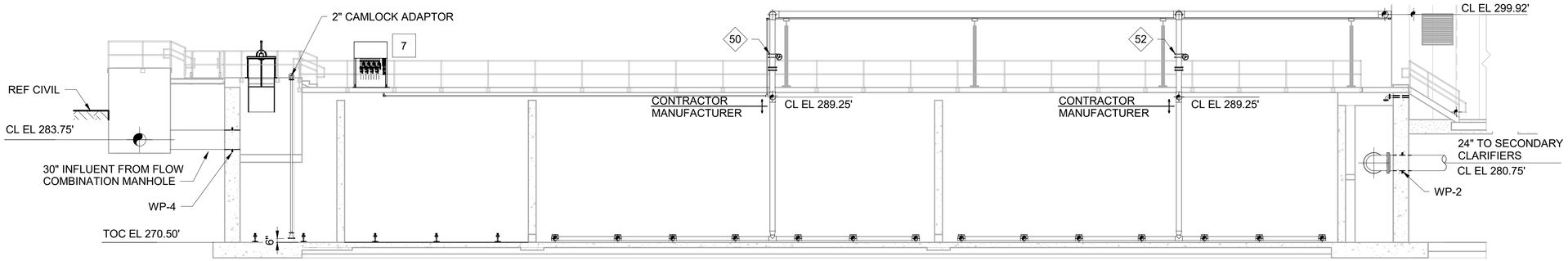

SECTION (TYP FOR BOTH BASINS) F 400D101

0 4' 8' 16'
SCALE IN FEET

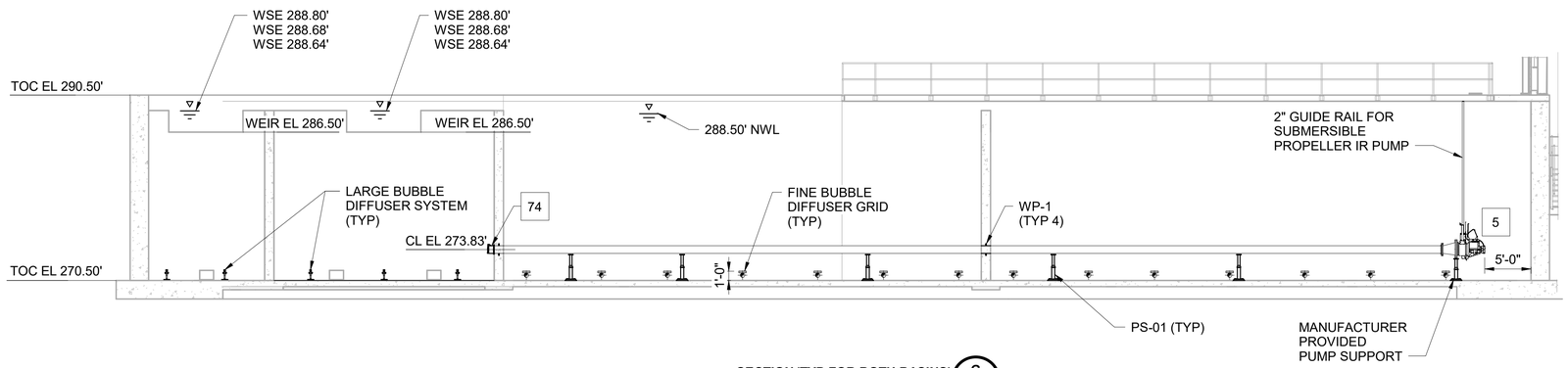

SECTION (TYP FOR BOTH BASINS) G 400D101

0 4' 8' 16'
SCALE IN FEET

GEORGIA REGISTERED No. PE048949 PROFESSIONAL ENGINEER TRENTON K. HOLLIS

Sealed: June 26th, 2024

BURNS McDONNELL
4004 SUMMIT BLVD. NE, SUITE 1200
ATLANTA, GA 30319
770-587-4776
LICENSEE NO. PEF000100
AUTHORIZATION NO. J550903

date	detailed
AUGUST 2, 2023	J. BENTRUP
designed	**checked**
T. HOLLIS	A. WADDOUPS

Perry

HOUSTON COUNTY, GEORGIA

EAST PERRY WWTF
PROCESS BASIN A
SECTIONS SHEET 2

project	contract
148538	

drawing 400D302 — **rev.** 0

sheet of **sheets**

file 148538_D_PROCESS_2022.rvt

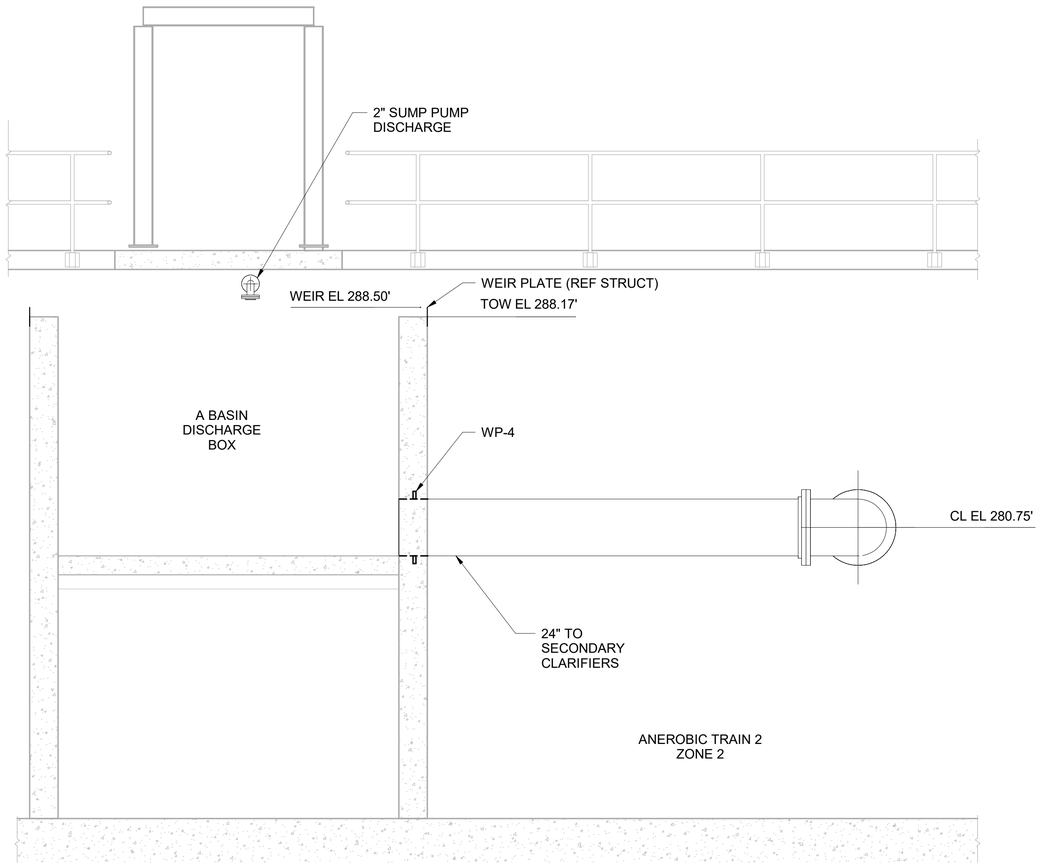

SECTION H 400D101

0 2' 4' 6'
SCALE IN FEET

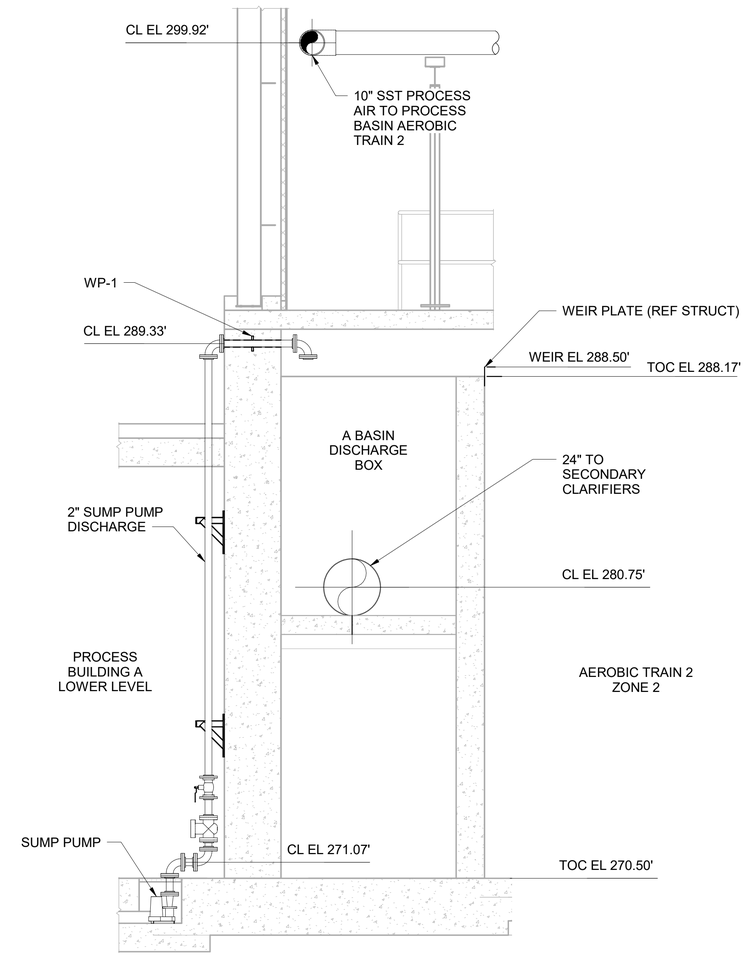

SECTION I 400D101

0 2' 4' 6'
SCALE IN FEET

no.	date	by	ckd	description
0	6/26/24	TKH	ALW	ISSUED FOR CONSTRUCTION

BURNS McDONNELL
4004 SUMMIT BLVD. NE, SUITE 1200
ATLANTA, GA 30319
770-587-4776
LICENSEE NO. PEF000100
AUTHORIZATION NO. J550903

date	detailed
AUGUST 2, 2023	J. BENTRUP
designed	**checked**
T. HOLLIS	A. WADDOUPS

Perry

HOUSTON COUNTY, GEORGIA

EAST PERRY WWTF
PROCESS BASIN A
SECTIONS SHEET 3

project	contract
148538	

drawing 400D303 – **rev.** 0

sheet **of** **sheets**

file 148538_D_PROCESS_2022.rvt

GEORGIA REGISTERED No. PE048949 PROFESSIONAL ENGINEER TRENTON K. HOLLIS

Sealed: June 26th, 2024

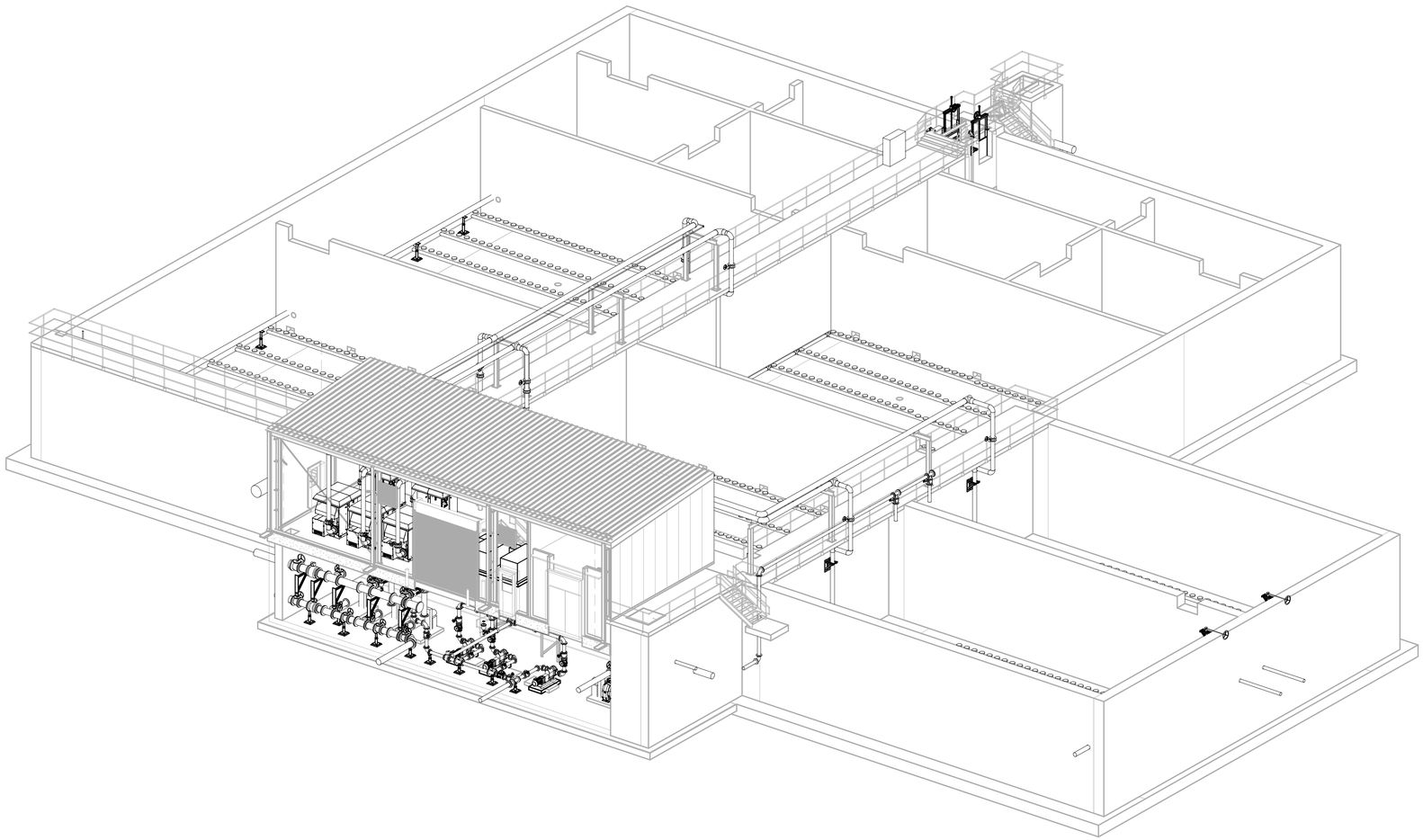

PROCESS BASIN A AND BUILDING ISOMETRIC

0 8' 16' 24'
SCALE IN FEET

UP
W N
S E
DN

no.	date	by	ckd	description
0	6/26/24	TKH	ALW	ISSUED FOR CONSTRUCTION

BURNS McDONNELL
4004 SUMMIT BLVD. NE, SUITE 1200
ATLANTA, GA 30319
770-587-4776
LICENSEE NO. PEF000100
AUTHORIZATION NO. J550903

date	detailed
APRIL 11, 2023	J. BENTRUP
designed	**checked**
T. HOLLIS	A. WADDOUPS

Perry

HOUSTON COUNTY, GEORGIA

EAST PERRY WWTF
PROCESS BASIN A
ISOMETRIC

GEORGIA REGISTERED No. PE048949 PROFESSIONAL ENGINEER TRENTON K. HOLLIS

Sealed: June 26th, 2024

project	contract
148538	

drawing 400D701 – **rev.** 0

sheet of **sheets**

file 148538_D_PROCESS_2022.rvt

no.	date	by	ckd	description
0	6/26/24	TKH	ALW	ISSUED FOR CONSTRUCTION

GENERAL NOTES:

1. AIR COMPRESSORS, AIR DRYERS, AIR RECEIVER TANK, AND AUTOMATIC DRAIN VALVES SHALL BE PROVIDED BY LARGE BUBBLE MIXING MANUFACTURER AND INSTALLED BY CONTRACTOR. CONTRACTOR SHALL SUPPLY AND INSTALL PRESSURE GAUGES, ISOLATION VALVES, PIPING, AND PIPING SUPPORTS TO CONNECT EQUIPMENT.
2. FIELD ROUTE COMPRESSED AIR SYSTEM DRAIN LINE TO BASEMENT SUMP WITH PUMP. ENSURE PIPING IS SLOPED TO DRAIN.
3. SEE SHEET 100D604 FOR EQUIPMENT AND VALVE IDENTIFICATION CALLOUTS.
4. LAYOUT REFLECTS EQUIPMENT FROM A SINGLE MANUFACURER. CONTRACTOR TO COORDINATE INSTALLATION REQUIREMENTS FOR ACTUAL EQUIPMENT SELECTED.
5. ALL BLOWER PIPING BELOW 10 FEET ABOVE FINISHED FLOOR SHALL BE INSULATED AND JACKETED.
6. REFER TO STRUCTURAL FOR EQUIPMENT PAD DESIGN. COORDINATE SIZE AND HEIGHT OF EQUIPMENT PADS WITH EQUIPMENT VENDOR AND CENTERLINE ELEVATIONS.

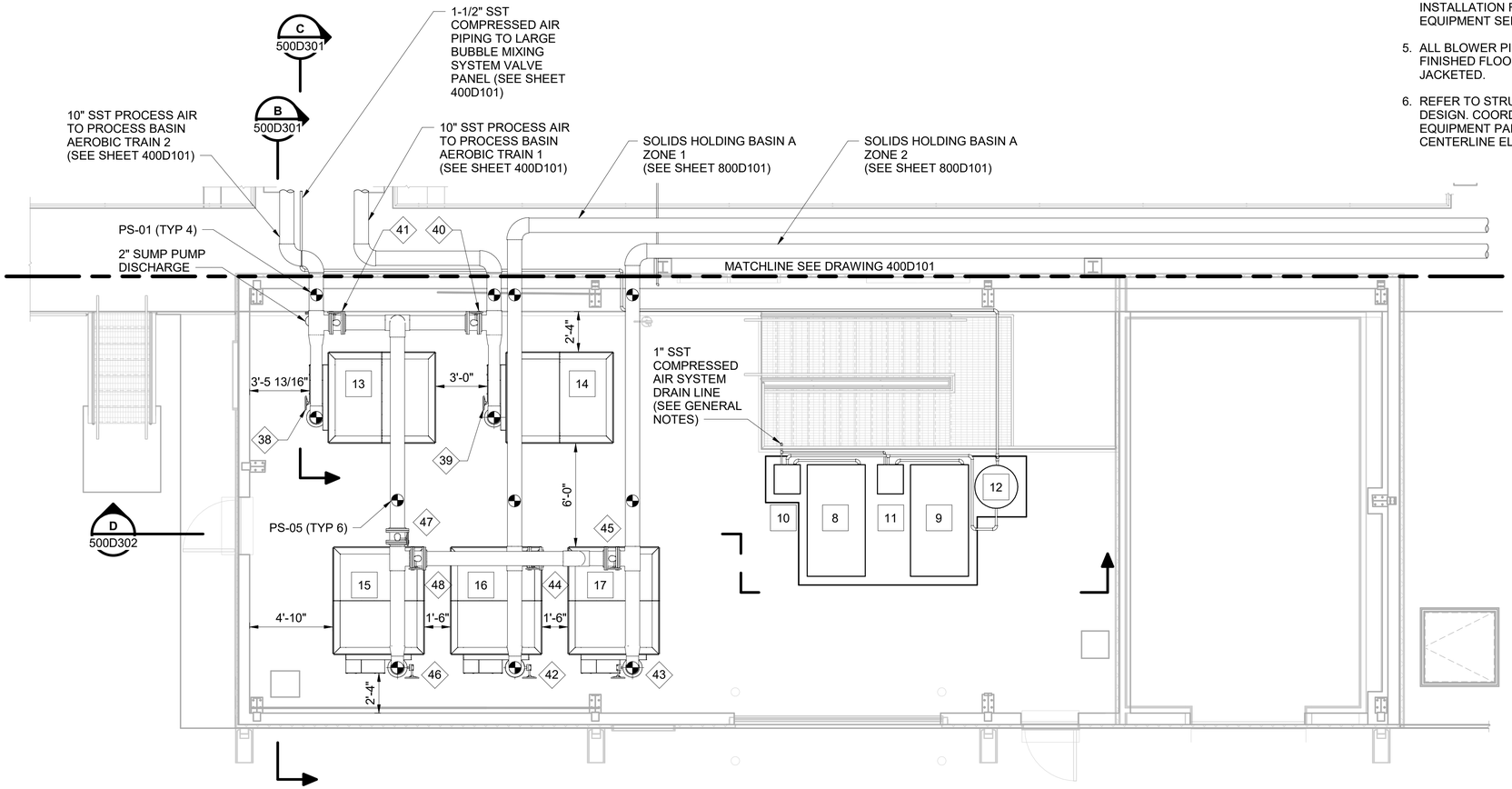

UPPER LEVEL PLAN

0 2' 4' 8'
SCALE IN FEET

NORTH

GEORGIA REGISTERED No. PE048949 PROFESSIONAL ENGINEER TRENTON K. HOLLIS

Sealed: June 26th, 1024

BURNS McDONNELL
4004 SUMMIT BLVD. NE, SUITE 1200
ATLANTA, GA 30319
770-587-4776
LICENSEE NO. PEF000100
AUTHORIZATION NO. J550903

date	detailed
APRIL 3, 2023	J. BENTRUP
designed	**checked**
T. HOLLIS	A. WADDOUPS

Perry

HOUSTON COUNTY, GEORGIA

EAST PERRY WWTF
PROCESS BUILDING A
UPPER LEVEL PLAN

project	contract
148538	

drawing **500D101** – rev. **0**

sheet of sheets

file 148538_D_PROCESS_2022.rvt

Scale For Microfilming
Millimeters
Inches

GENERAL NOTES:

1. SUMP PUMP DISCHARGE FORCE MAIN SHALL BE EQUIPPED WITH AN ISOLATION BALL VALVE AND CHECK VALVE. PIPING SHALL BE TERMINATED IN THE PROCESS BASIN DISCHARGE BOX.
2. FIELD ROUTE COMPRESSED AIR SYSTEM DRAIN LINE TO BASEMENT SUMP WITH PUMP. ENSURE PIPING IS SLOPED TO DRAIN.
3. SEE SHEET 100D604 FOR EQUIPMENT AND VALVE IDENTIFICATION CALLOUTS.
4. LAYOUT REFLECTS EQUIPMENT FROM A SINGLE MANUFACTURER. CONTRACTOR TO COORDINATE INSTALLATION REQUIREMENTS FOR ACTUAL EQUIPMENT SELECTED.
5. REFER TO STRUCTURAL FOR EQUIPMENT PAD DESIGN. COORDINATE SIZE AND HEIGHT OF EQUIPMENT PADS WITH EQUIPMENT VENDOR AND CENTERLINE ELEVATIONS.

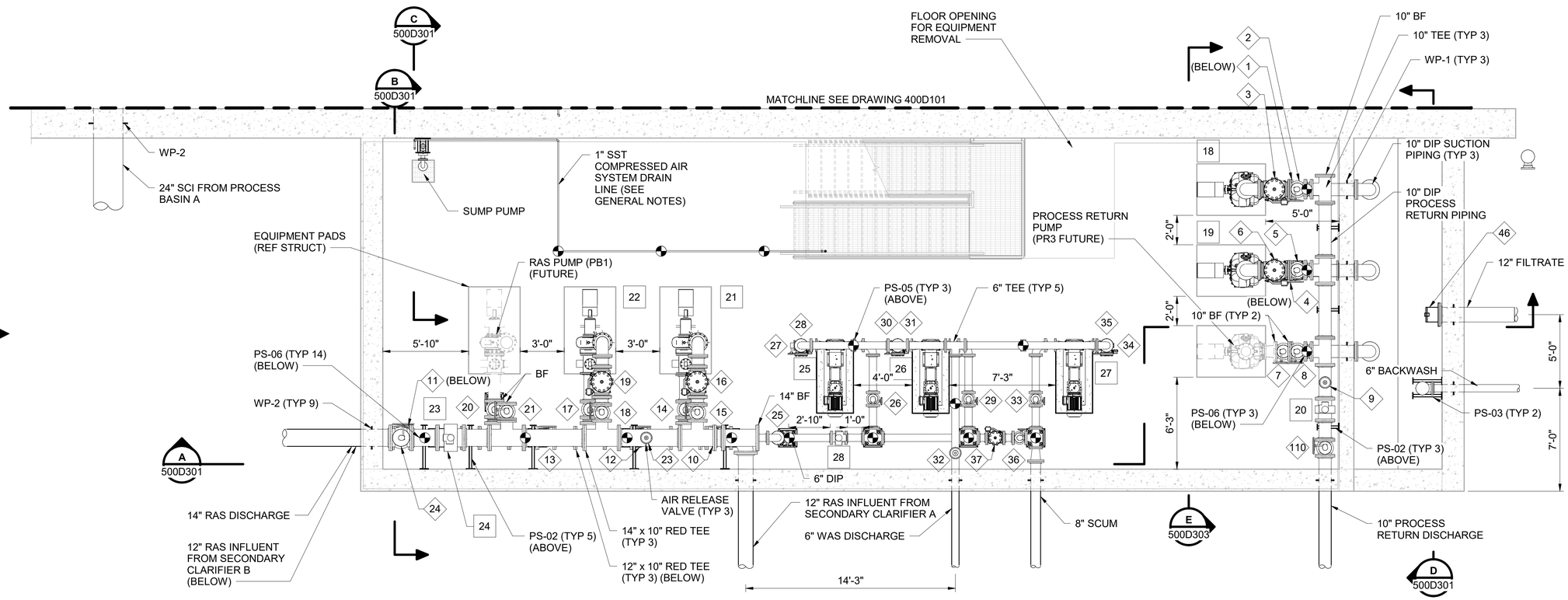

LOWER LEVEL PLAN

0 2' 4' 8'
SCALE IN FEET

NORTH

no.	date	by	ckd	description
0	6/26/24	TKH	ALW	ISSUED FOR CONSTRUCTION

BURNS McDONNELL
4004 SUMMIT BLVD. NE, SUITE 1200
ATLANTA, GA 30319
770-587-4776
LICENSEE NO. PEF000100
AUTHORIZATION NO. J550903

date	detailed
APRIL 3, 2023	J. BENTRUP
designed	**checked**
T. HOLLIS	A. WADDOUPS

Perry

HOUSTON COUNTY, GEORGIA

EAST PERRY WWTF
PROCESS BUILDING A
LOWER LEVEL PLAN

project	contract
148538	

drawing 500D102 — **rev.** 0

sheet **of** **sheets**

file 148538_D_PROCESS_2022.rvt

GEORGIA REGISTERED No. PE048949 PROFESSIONAL ENGINEER TRENTON K. HOLLIS

Sealed: June 26th, 2024

no.	date	by	ckd	description
0	6/26/24	TKH	ALW	ISSUED FOR CONSTRUCTION

GENERAL NOTES:

1. SUMP PUMP DISCHARGE FORCE MAIN SHALL BE EQUIPPED WITH AN ISOLATION BALL VALVE AND CHECK VALVE. PIPING SHALL BE TERMINATED IN THE PROCESS BASIN DISCHARGE BOX.
2. FIELD ROUTE COMPRESSED AIR SYSTEM DRAIN LINE TO BASEMENT SUMP WITH PUMP. ENSURE PIPING IS SLOPED TO DRAIN.
3. SEE SHEET 100D604 FOR EQUIPMENT AND VALVE IDENTIFICATION CALLOUTS.
4. LAYOUT REFLECTS EQUIPMENT FROM A SINGLE MANUFACTURER. CONTRACTOR TO COORDINATE INSTALLATION REQUIREMENTS FOR ACTUAL EQUIPMENT SELECTED.
5. REFER TO STRUCTURAL FOR EQUIPMENT PAD DESIGN. COORDINATE SIZE AND HEIGHT OF EQUIPMENT PADS WITH EQUIPMENT VENDOR AND CENTERLINE ELEVATIONS.
6. FOR PLUG AND BUTTERFLY VALVES LOCATED 6 FEET AND ABOVE FINISHED FLOOR, PROVIDE CHAINWHEELS FOR VALVES.

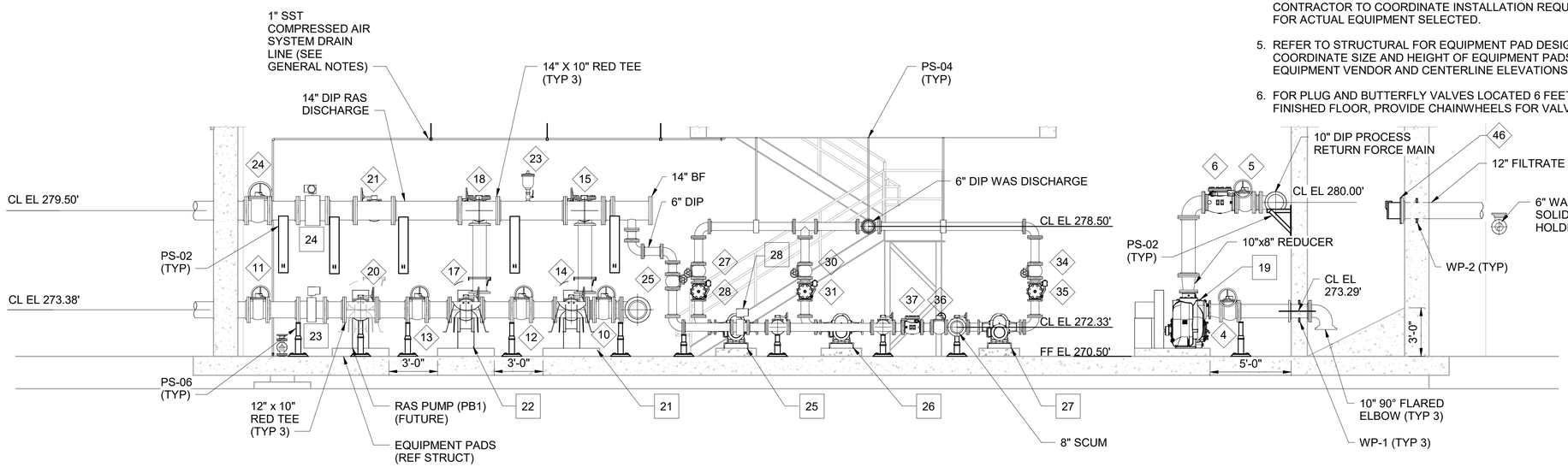

SECTION A 500D102

SCALE IN FEET

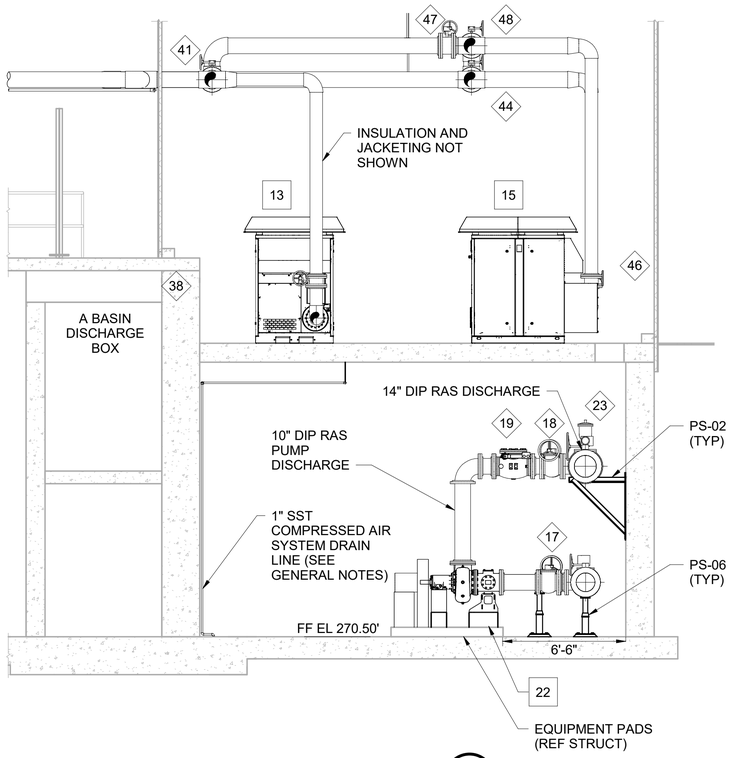

SECTION B 500D101

SCALE IN FEET

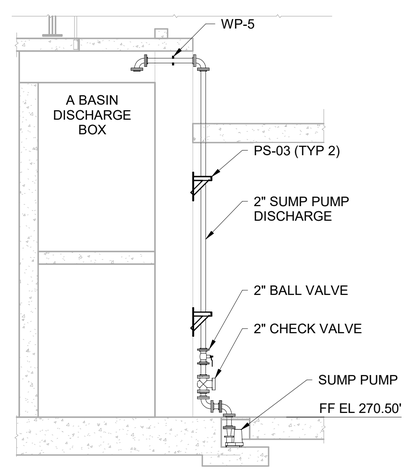

SECTION C 500D101

SCALE IN FEET

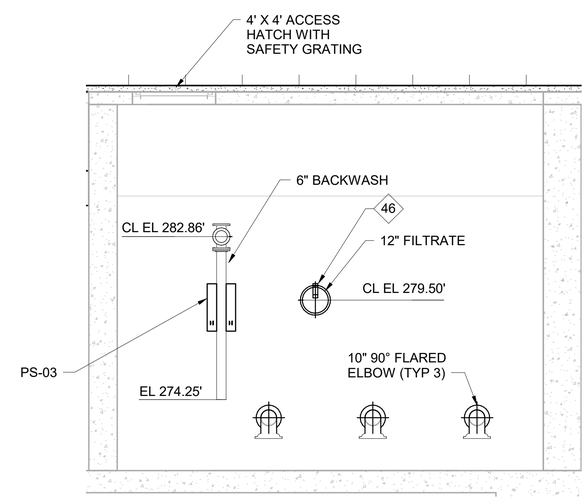

SECTION D 500D102

SCALE IN FEET

GEORGIA REGISTERED No. PE048949 PROFESSIONAL ENGINEER TRENTON K. HOLLIS

Sealed: June 26th, 2024

BURNS McDONNELL
4004 SUMMIT BLVD. NE, SUITE 1200
ATLANTA, GA 30319
770-587-4776
LICENSEE NO. PEF000100
AUTHORIZATION NO. J550903

date	detailed
APRIL 3, 2023	J. BENTRUP
designed	**checked**
T. HOLLIS	A. WADDOUPS

Perry

HOUSTON COUNTY, GEORGIA

EAST PERRY WWTF

PROCESS BUILDING A
SECTIONS SHEET I

project	contract
148538	

drawing 500D301 — **rev.** 0

sheet **of** **sheets**

file 148538_D_PROCESS_2022.rvt

GENERAL NOTES:

1. FIELD ROUTE COMPRESSED AIR SYSTEM DRAIN LINE TO BASEMENT SUMP WITH PUMP. ENSURE PIPING IS SLOPED TO DRAIN.
2. SEE SHEET 100D604 FOR EQUIPMENT AND VALVE IDENTIFICATION CALLOUTS.
3. LAYOUT REFLECTS EQUIPMENT FROM A SINGLE MANUFACTURER. CONTRACTOR TO COORDINATE INSTALLATION REQUIREMENTS FOR ACTUAL EQUIPMENT SELECTED.
4. REFER TO STRUCTURAL FOR EQUIPMENT PAD DESIGN. COORDINATE SIZE AND HEIGHT OF EQUIPMENT PADS WITH EQUIPMENT VENDOR AND CENTERLINE ELEVATIONS.
5. ALL BLOWER PIPING BELOW 10 FEET ABOVE FINISHING FLOOR SHALL BE INSULATED AND JACKETED.
6. FOR PLUG AND BUTTERFLY VALVES LOCATED 6 FEET AND ABOVE FINISHED FLOOR, PROVIDE CHAINWHEELS FOR VALVES.

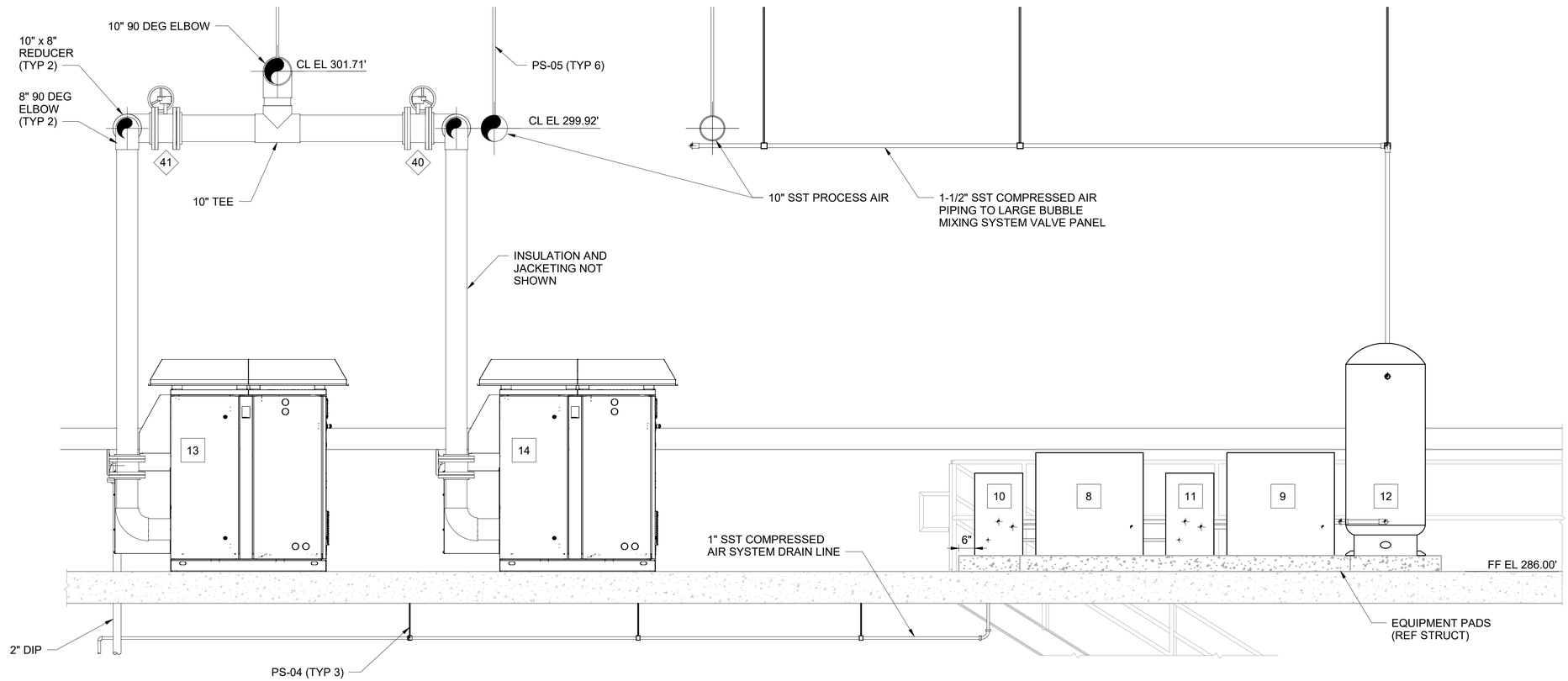

SECTION D 500D101

0 1' 2' 4'
SCALE IN FEET

no.	date	by	ckd	description
0	6/26/24	TKH	ALW	ISSUED FOR CONSTRUCTION

BURNS McDONNELL
4004 SUMMIT BLVD. NE, SUITE 1200
ATLANTA, GA 30319
770-587-4776
LICENSEE NO. PEF000100
AUTHORIZATION NO. J550903

date	detailed
APRIL 3, 2023	J. BENTRUP
designed	**checked**
T. HOLLIS	A. WADDOUPS

Perry
HOUSTON COUNTY, GEORGIA

EAST PERRY WWTF
PROCESS BUILDING A
SECTIONS SHEET II

GEORGIA REGISTERED No. PE048849 PROFESSIONAL ENGINEER TRENTON K. HOLLIS

Sealed: June 26th, 2024

project	contract
148538	

drawing **500D302** – rev. **0**

sheet of sheets

file 148538_D_PROCESS_2022.rvt

GENERAL NOTES:

1. SEE SHEET 100D604 FOR EQUIPMENT AND VALVE IDENTIFICATION CALLOUTS.
2. LAYOUT REFLECTS EQUIPMENT FROM A SINGLE MANUFACTURER. CONTRACTOR TO COORDINATE INSTALLATION REQUIREMENTS FOR ACTUAL EQUIPMENT SELECTED.
3. REFER TO STRUCTURAL FOR EQUIPMENT PAD DESIGN. COORDINATE SIZE AND HEIGHT OF EQUIPMENT PADS WITH EQUIPMENT VENDOR AND CENTERLINE ELEVATIONS.
4. FOR PLUG AND BUTTERFLY VALVES LOCATED 6 FEET AND ABOVE FINISHED FLOOR, PROVIDE CHAINWHEELS FOR VALVES.

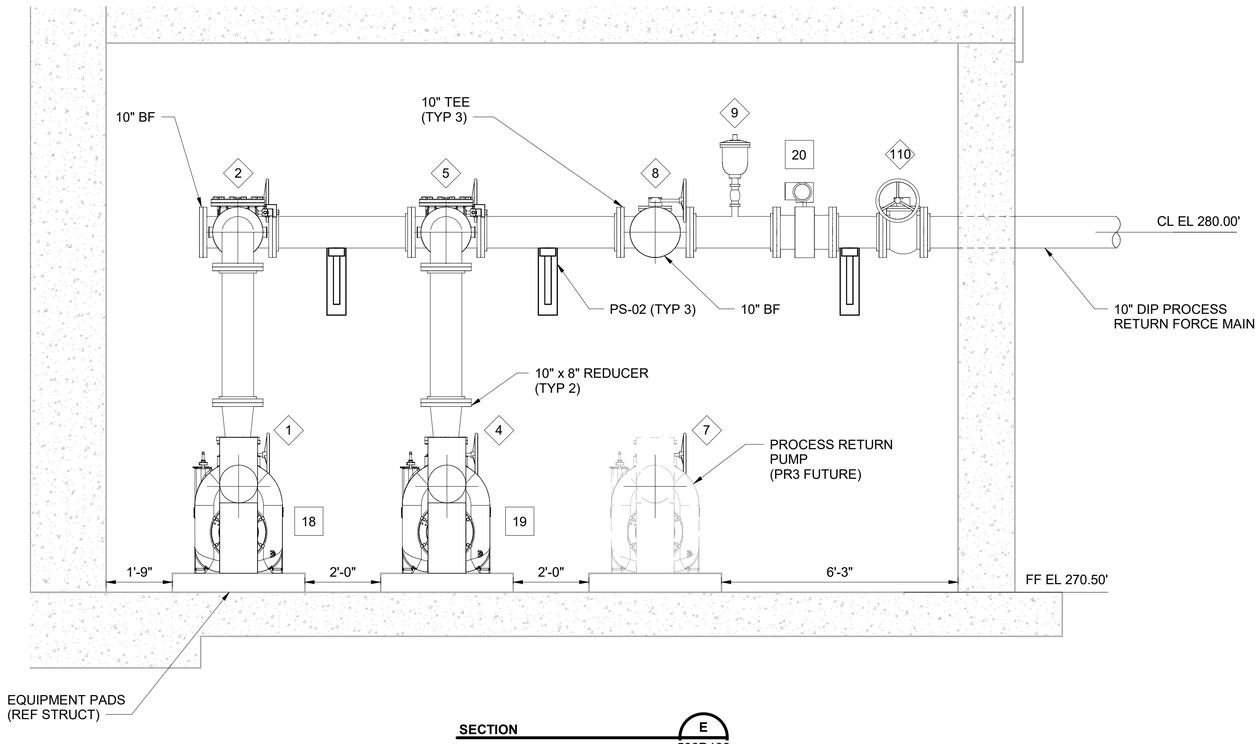

SECTION E 500D102

0 1' 2' 4'
SCALE IN FEET

no.	date	by	ckd	description
0	6/26/24	TKH	ALW	ISSUED FOR CONSTRUCTION

BURNS McDONNELL
4004 SUMMIT BLVD. NE, SUITE 1200
ATLANTA, GA 30319
770-587-4776
LICENSEE NO. PEF000100
AUTHORIZATION NO. J550903

date	detailed
APRIL 3, 2023	J. BENTRUP
designed	**checked**
T. HOLLIS	A. WADDOUPS

Perry

HOUSTON COUNTY, GEORGIA

EAST PERRY WWTF
PROCESS BUILDING A
SECTIONS SHEET III

project	contract
148538	

drawing **500D303** – rev. **0**

sheet of sheets

file 148538_D_PROCESS_2022.rvt

GEORGIA REGISTERED No. PE048949 PROFESSIONAL ENGINEER TRENTON K. HOLLIS

Sealed: June 26th, 2024

GENERAL NOTES:

1. SEE SHEET 100D604 FOR EQUIPMENT AND VALVE IDENTIFICATION CALLOUTS.
2. LAYOUT REFLECTS EQUIPMENT FROM A SINGLE MANUFACTURER. CONTRACTOR TO COORDINATE INSTALLATION REQUIREMENTS FOR ACTUAL EQUIPMENT SELECTED.

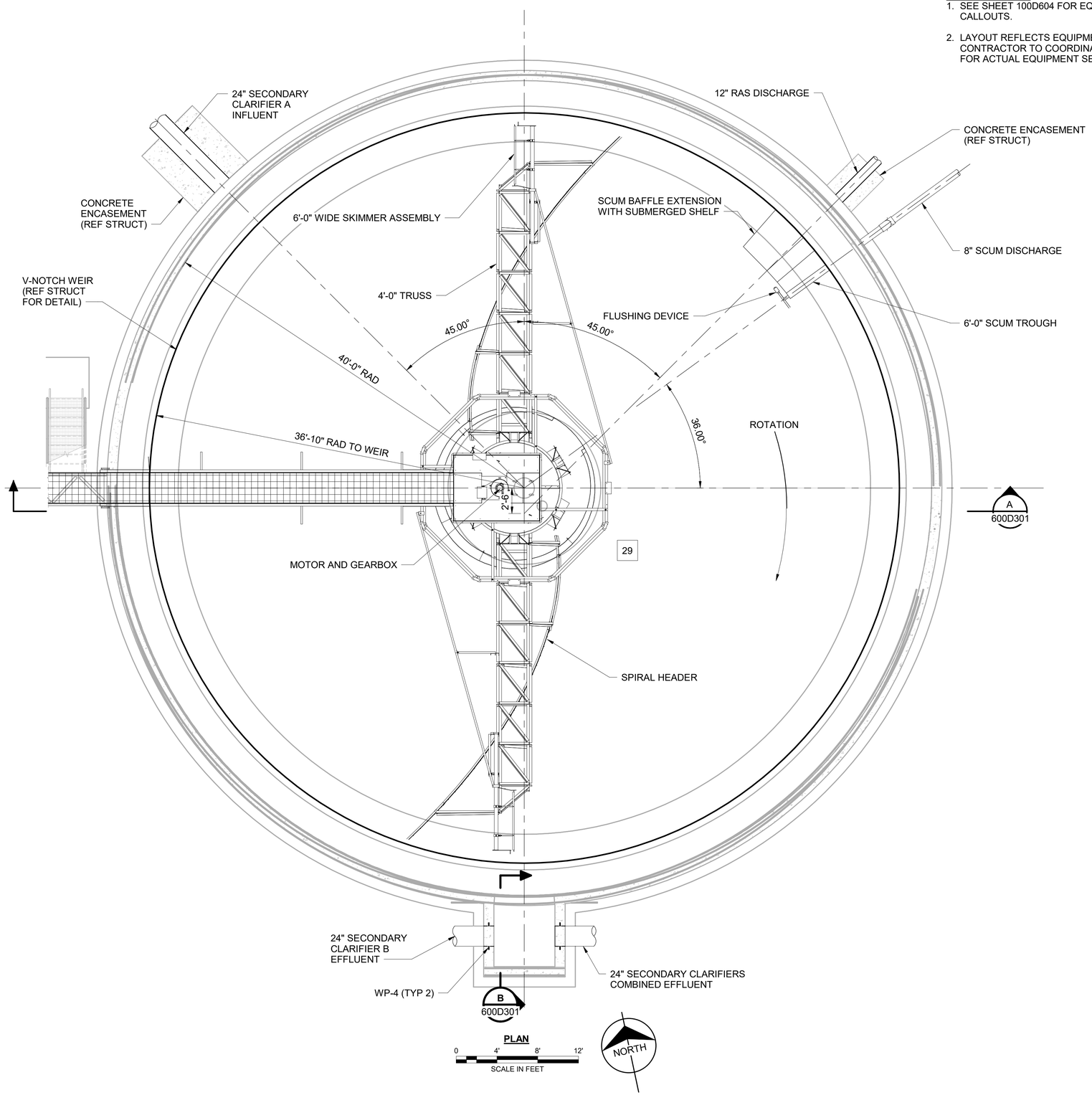

PLAN

0 4' 8' 12'
SCALE IN FEET

no.	date	by	ckd	description
0	6/26/24	TKH	ALW	ISSUED FOR CONSTRUCTION

BURNS McDONNELL
4004 SUMMIT BLVD. NE, SUITE 1200
ATLANTA, GA 30319
770-587-4776
LICENSEE NO. PEF000100
AUTHORIZATION NO. J550903

date	detailed
APRIL 11, 2023	J. BENTRUP
designed	**checked**
T. HOLLIS	A. WADDOUPS

Perry

HOUSTON COUNTY, GEORGIA

EAST PERRY WWTF
CLARIFIER A
PLAN

project	contract
148538	

drawing 600D101 – **rev.** 0

sheet of **sheets**

file 148538_D_CLARIFIERS_2022.rvt

GEORGIA REGISTERED No. PE048949 PROFESSIONAL ENGINEER TRENTON K. HOLLIS

Sealed: June 26th, 2024

GENERAL NOTES:

1. SEE SHEET 100D604 FOR EQUIPMENT AND VALVE IDENTIFICATION CALLOUTS.
2. LAYOUT REFLECTS EQUIPMENT FROM A SINGLE MANUFACTURER. CONTRACTOR TO COORDINATE INSTALLATION REQUIREMENTS FOR ACTUAL EQUIPMENT SELECTED.

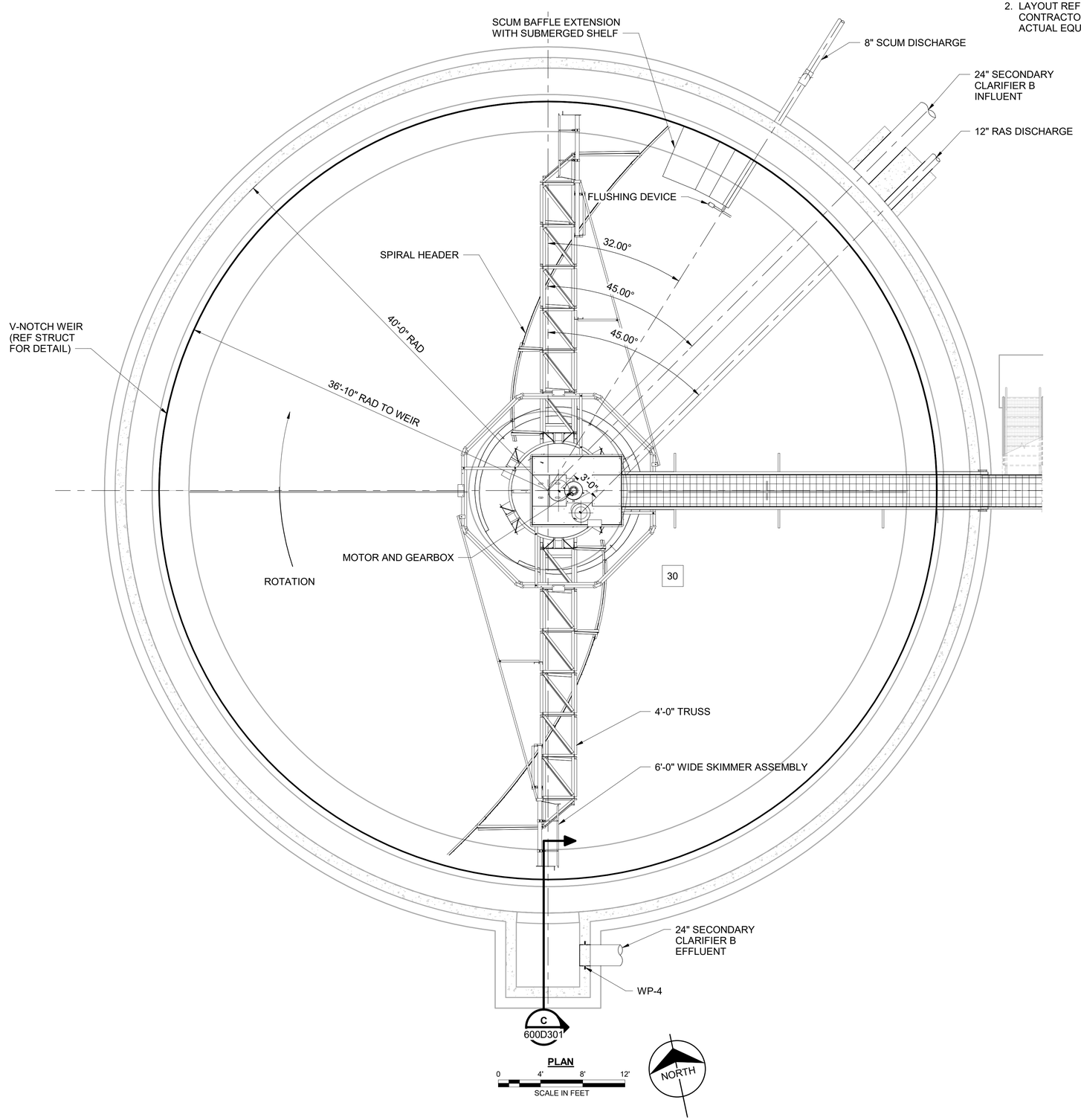

PLAN

no.	date	by	ckd	description
0	6/26/24	TKH	ALW	ISSUED FOR CONSTRUCTION

BURNS McDONNELL
4004 SUMMIT BLVD. NE, SUITE 1200
ATLANTA, GA 30319
770-587-4776
LICENSEE NO. PEF000100
AUTHORIZATION NO. J550903

date	detailed
AUGUST 2, 2023	J. BENTRUP
designed	**checked**
T. HOLLIS	A. WADDOUPS

Perry

HOUSTON COUNTY, GEORGIA

EAST PERRY WWTF

CLARIFIER B
PLAN

project	contract
148538	

drawing 600D102 — **rev.** 0

sheet **of** **sheets**

file 148538_D_CLARIFIERS_2022.rvt

GEORGIA REGISTERED No. PE048949 PROFESSIONAL ENGINEER TRENTON K. HOLLIS

Sealed: June 26th, 2024

Scale For Microfilming: Millimeters / Inches

no.	date	by	ckd	description
0	6/26/24	TKH	ALW	ISSUED FOR CONSTRUCTION

GENERAL NOTES:

1. RAKE ARMS, SCUM TROUGH, ETC SHOWN ROTATED FOR CLARITY.
2. INSTALL ALL CLARIFIER MECHANISMS AND ACCESSORIES PER MANUFACTURER RECOMMENDATIONS.

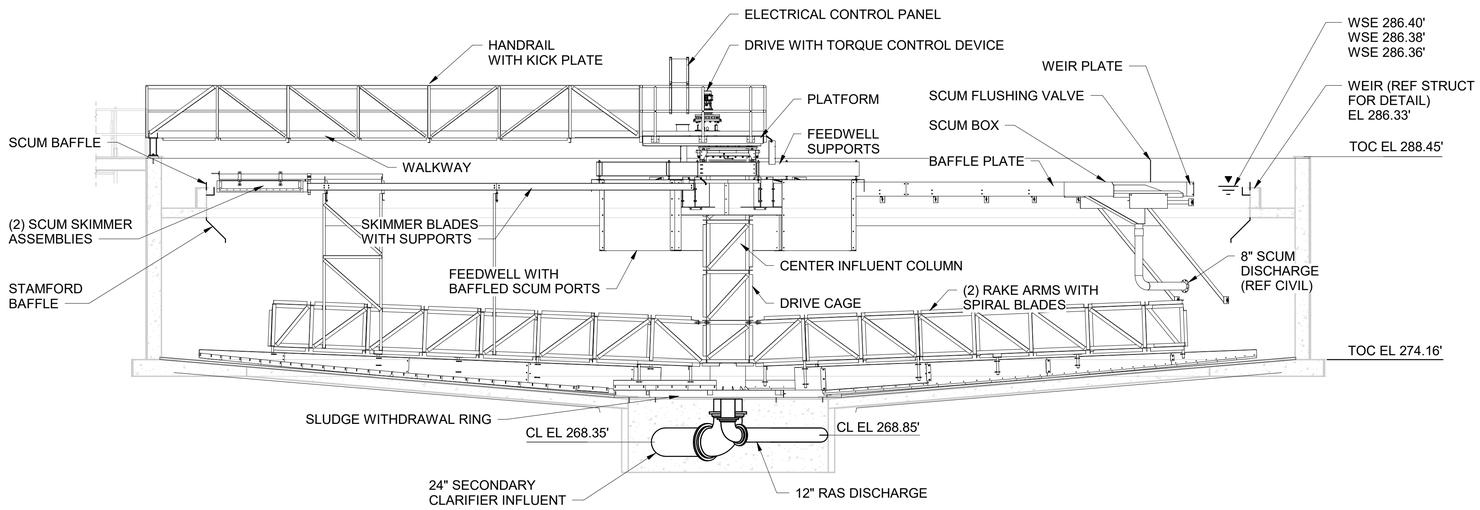

SECTION (TYP BOTH CLARIFIERS) A 600D101

0 4' 8' 12'
SCALE IN FEET

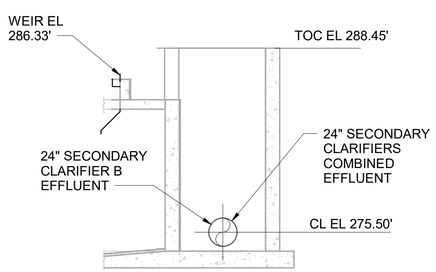

SECTION B 600D101

0 4' 8' 12'
SCALE IN FEET

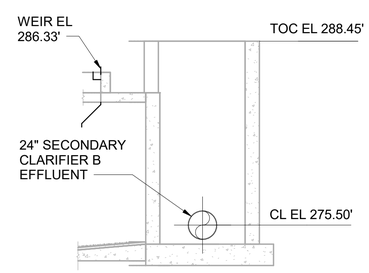

SECTION C 600D102

0 4' 8' 12'
SCALE IN FEET

GEORGIA REGISTERED No. PE048949 PROFESSIONAL ENGINEER TRENTON K. HOLLIS

Sealed: June 26th, 2024

BURNS McDONNELL
4004 SUMMIT BLVD. NE, SUITE 1200
ATLANTA, GA 30319
770-587-4776
LICENSEE NO. PEF000100
AUTHORIZATION NO. J550903

date	detailed
APRIL 11, 2023	J. BENTRUP
designed	**checked**
T. HOLLIS	A. WADDOUPS

Perry
HOUSTON COUNTY, GEORGIA

EAST PERRY WWTF
CLARIFIER A
SECTION

project	contract
148538	

drawing 600D301 — **rev.** 0

sheet of **sheets**

file 148538_D_CLARIFIERS_2022.rvt

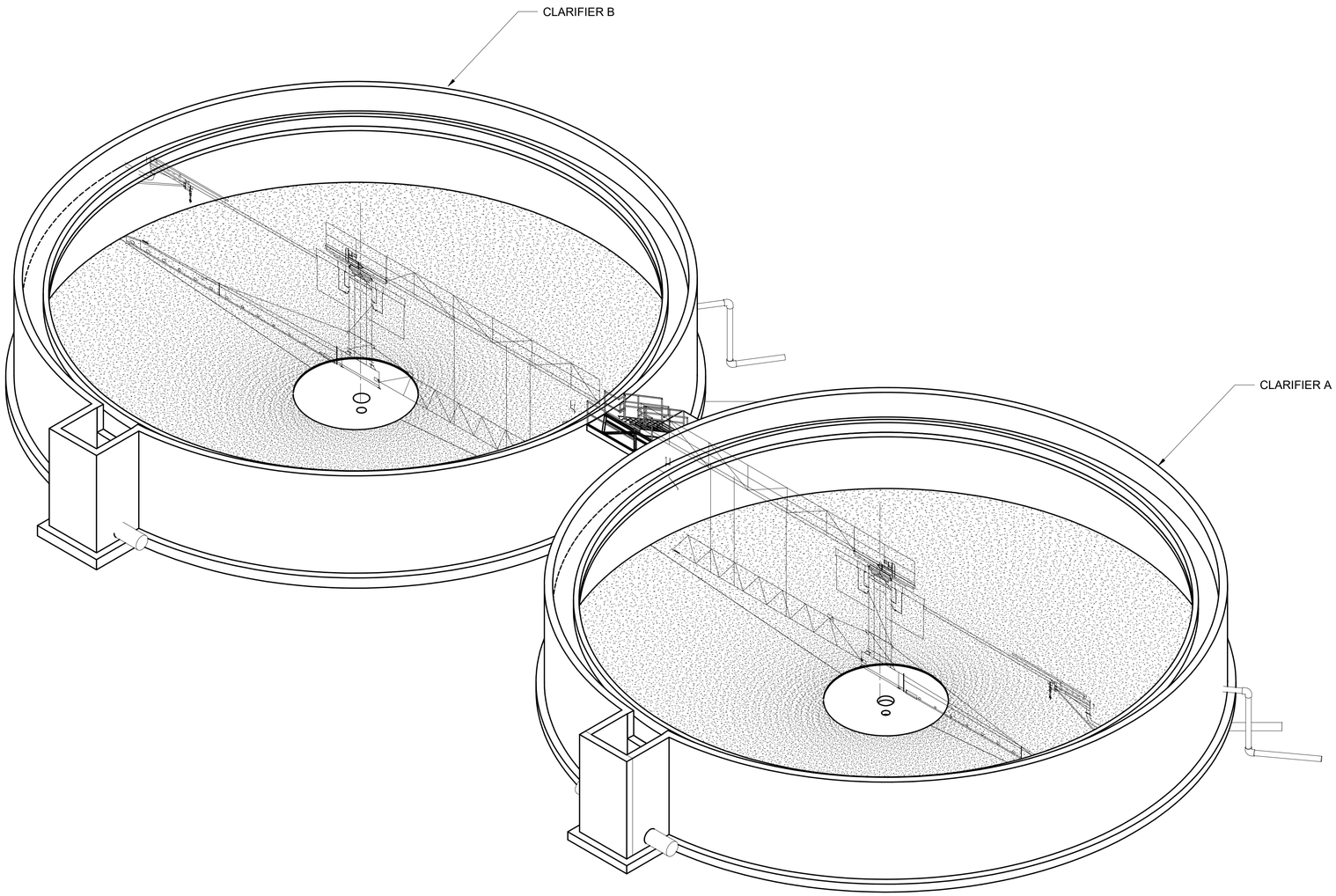

CLARIFIERS ISOMETRIC

0 4' 8' 16'
SCALE IN FEET

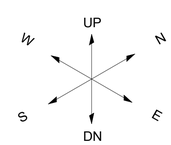

no.	date	by	ckd	description
0	6/26/24	TKH	ALW	ISSUED FOR CONSTRUCTION

BURNS McDONNELL
4004 SUMMIT BLVD. NE, SUITE 1200
ATLANTA, GA 30319
770-587-4776
LICENSEE NO. PEF000100
AUTHORIZATION NO. J550903

date	detailed
APRIL 24, 2023	J. BENTRUP
designed	**checked**
T. HOLLIS	A. WADDOUPS

Perry

HOUSTON COUNTY, GEORGIA

EAST PERRY WWTF
CLARIFIER
ISOMETRIC

GEORGIA REGISTERED No. PE048949 PROFESSIONAL ENGINEER TRENTON K. HOLLIS

Sealed: June 26th, 2024

project	contract
148538	

drawing 600D701 – **rev.** 0

sheet **of** **sheets**

file 148538_D_CLARIFIERS_2022.rvt

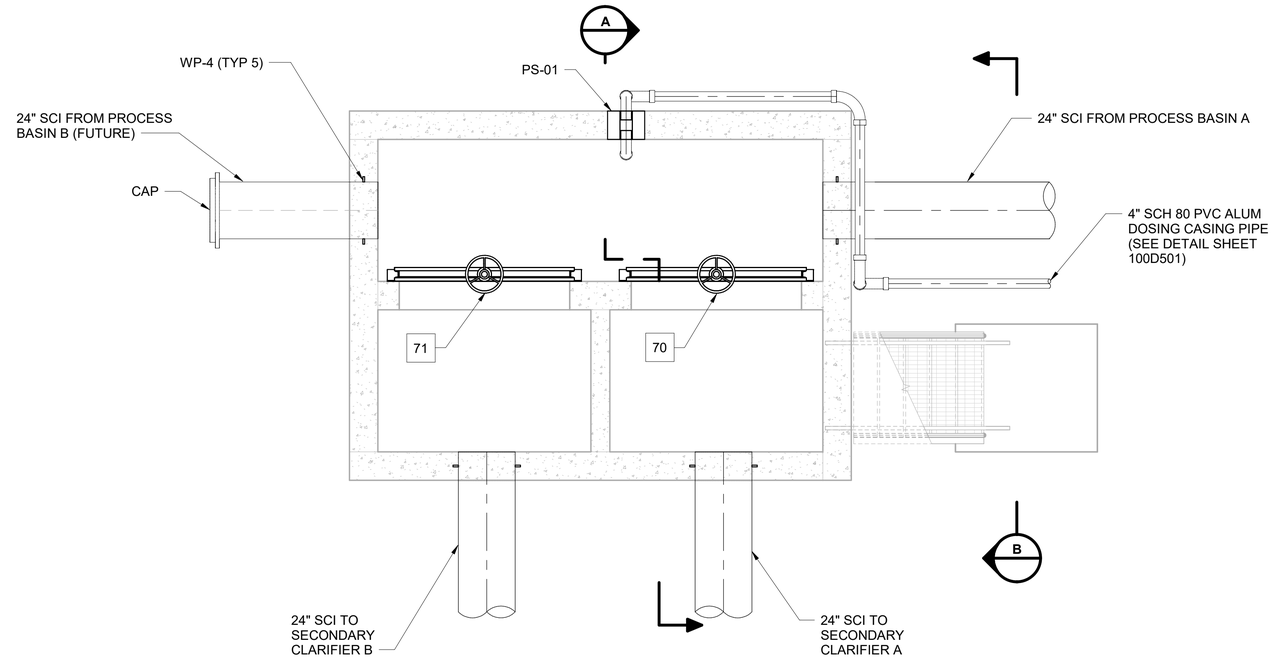

PLAN

0 2' 4' 6'
SCALE IN FEET

NORTH

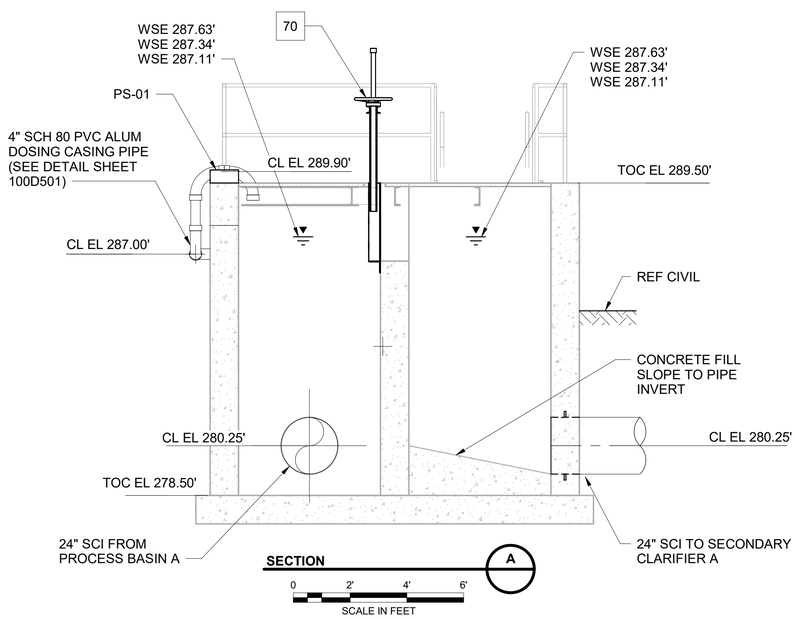

SECTION A

0 2' 4' 6'
SCALE IN FEET

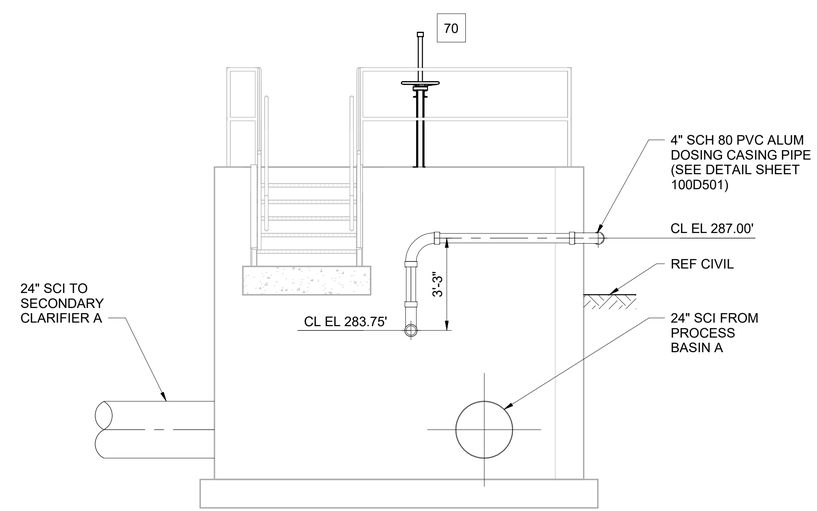

SECTION B

0 2' 4' 6'
SCALE IN FEET

GEORGIA REGISTERED No. PE048949 PROFESSIONAL ENGINEER TRENTON K. HOLLIS

Sealed: June 26th, 2024

no.	date	by	ckd	description
0	6/26/24	TKH	ALW	ISSUED FOR CONSTRUCTION

BURNS McDONNELL
4004 SUMMIT BLVD. NE, SUITE 1200
ATLANTA, GA 30319
770-587-4776
LICENSEE NO. PEF000100
AUTHORIZATION NO. J550903

date	detailed
APRIL 11, 2023	J. BENTRUP
designed	**checked**
T. HOLLIS	A. WADDOUPS

Perry
HOUSTON COUNTY, GEORGIA

EAST PERRY WWTF
CLARIFIER SPLITTER
PLAN AND SECTION

project	contract
148538	

drawing 650D101 — **rev.** 0

sheet **of** **sheets**

file 148538_D_CLARIFIER SPLITTER_2022.rvt

Scale For Microfilming
Millimeters
Inches

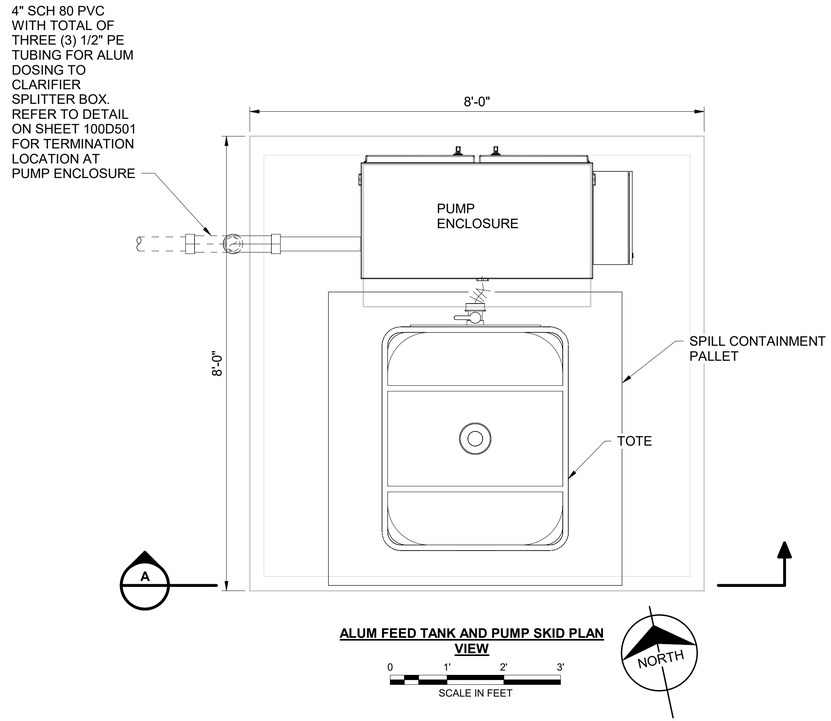

ALUM FEED TANK AND PUMP SKID PLAN VIEW

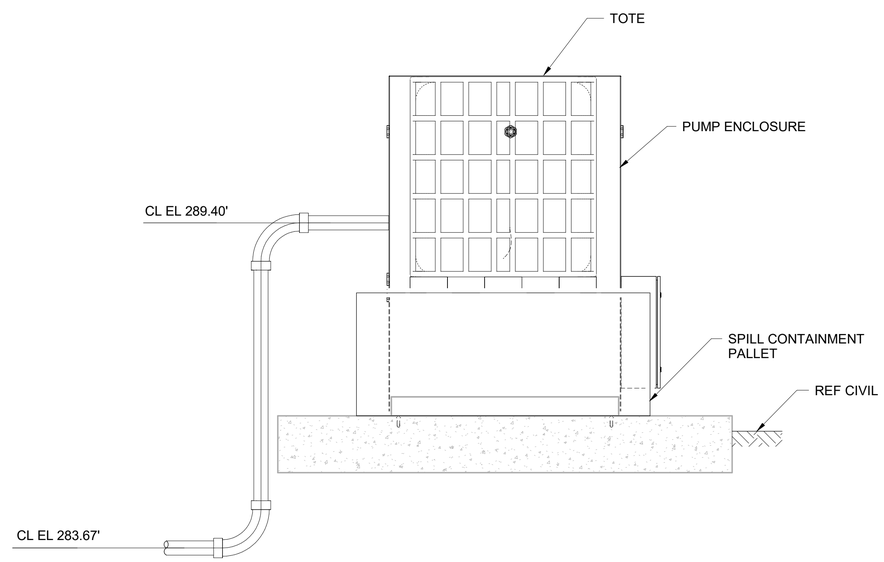

SECTION A

GENERAL NOTES:

1. CONTRACTOR SHALL PROVIDE FLEXIBLE HOSE WITH ISOLATION VALVE FROM TOTE TO METERING PUMP ENCLOSURE.
2. CONTRACTOR SHALL FIELD ROUTE CHEMICAL TUBING FROM METERING PUMP ENCLOSURE TO ALUM CARRIER PIPE. SUPPORT CASING PIPING AS NECESSARY.
3. SEE SHEET 100D604 FOR EQUIPMENT AND VALVE IDENTIFICATION CALLOUTS.
4. LAYOUT REFLECTS EQUIPMENT FROM A SINGLE MANUFACTURER. CONTRACTOR TO COORDINATE INSTALLATION REQUIREMENTS FOR ACTUAL EQUIPMENT SELECTED.

no.	date	by	ckd	description
0	6/26/24	TKH	ALW	ISSUED FOR CONSTRUCTION

BURNS McDONNELL
4004 SUMMIT BLVD. NE, SUITE 1200
ATLANTA, GA 30319
770-587-4776
LICENSEE NO. PEF000100
AUTHORIZATION NO. J550903

date	detailed
APRIL 11, 2023	J. BENTRUP
designed	**checked**
T. HOLLIS	A. WADDOUPS

Perry

HOUSTON COUNTY, GEORGIA

EAST PERRY WWTF

ALUM FEED TANK AND PUMP SKID PLAN AND SECTION

project	contract
148538	

drawing **675D101** – rev. **0**

sheet of sheets

file 148538_D_ALUM CONTAINMENT_2022.rvt

GEORGIA REGISTERED No. PE048949 PROFESSIONAL ENGINEER TRENTON K. HOLLIS

Sealed: June 26th, 2024

no.	date	by	ckd	description
0	6/26/24	TKH	ALW	ISSUED FOR CONSTRUCTION

GENERAL NOTES:

1. EFFLUENT AUTO SAMPLER SHALL BE HACH AS950 REFRIGERATED SAMPLER, OR OWNER-APPROVED EQUAL. FIELD ROUTE TUBING INTO WET WELL DOWNSTREAM OF UV DISINFECTION PER SAMPLER MANUFACTURER'S RECOMMENDATION.
2. SEE SHEET 100D604 FOR EQUIPMENT AND VALVE IDENTIFICATION CALLOUTS.
3. LAYOUT REFLECTS EQUIPMENT FROM A SINGLE MANUFACTURER. CONTRACTOR TO COORDINATE INSTALLATION REQUIREMENTS FOR ACTUAL EQUIPMENT SELECTED.
4. NON-POTABLE WATER REUSE SKID VALVES AND PIPES SHALL BE HEAT TRACED AND INSULATED TO PREVENT FROM FREEZING. COORDINATE WITH MANUFACTURER.
5. CONCRETE ENCASEMENT FOR THE 24" CLARIFIED EFFLUENT LINE SHALL EXTEND 11'-0" FROM FACE OF UV WALL DUE TO FOUNDATION OF CANOPY COLUMN.

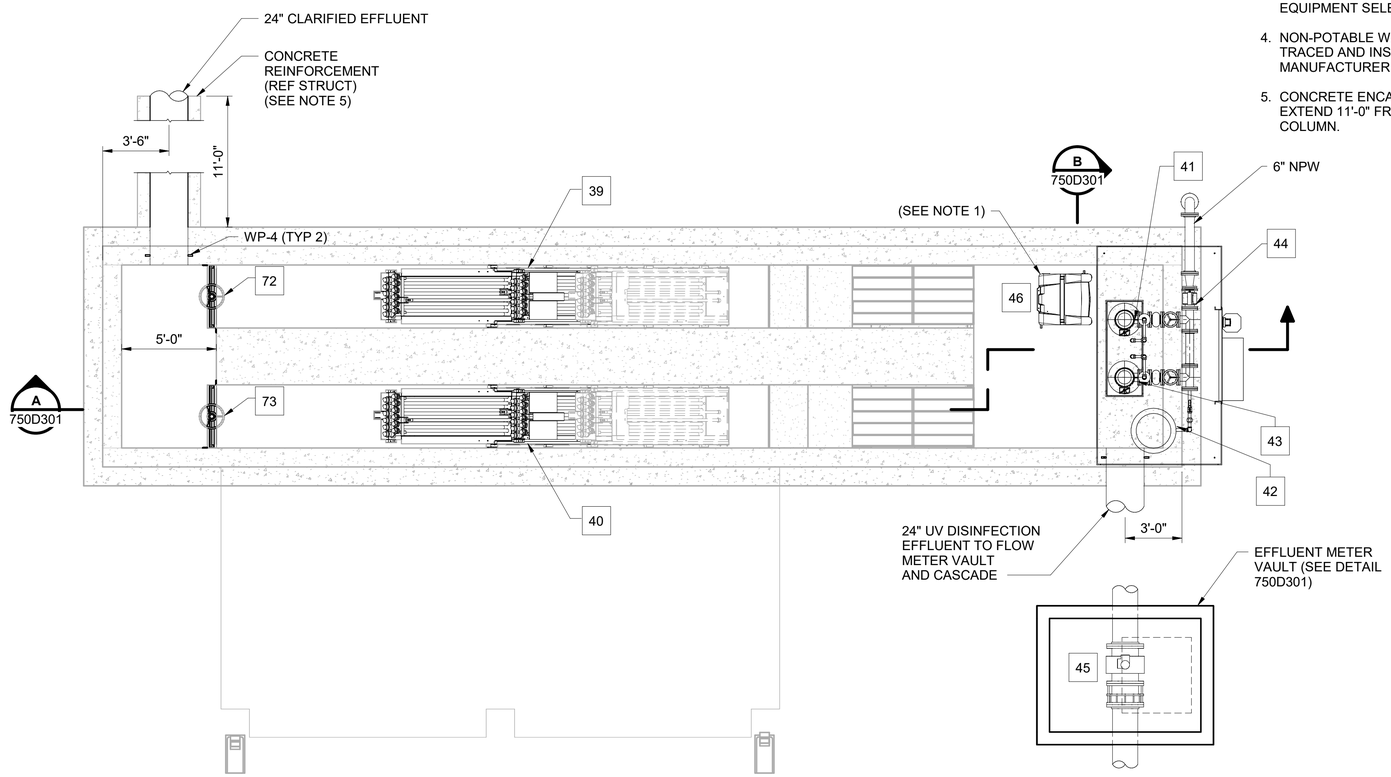

PLAN

0 2' 4' 8'

SCALE IN FEET

NORTH

GEORGIA REGISTERED No. PE048949 PROFESSIONAL ENGINEER TRENTON K. HOLLIS

Sealed: June 26th, 2024

BURNS McDONNELL
4004 SUMMIT BLVD. NE, SUITE 1200
ATLANTA, GA 30319
770-587-4776
LICENSEE NO. PEF000100
AUTHORIZATION NO. J550903

date	detailed
APRIL 11, 2023	J. BENTRUP
designed	**checked**
T. HOLLIS	A. WADDOUPS

Perry

HOUSTON COUNTY, GEORGIA

EAST PERRY WWTF

UV DISINFECTION PLAN

project	contract
148538	

drawing 750D101 – **rev.** 0

sheet of **sheets**

file 148538_D_UV TREATMENT_2022

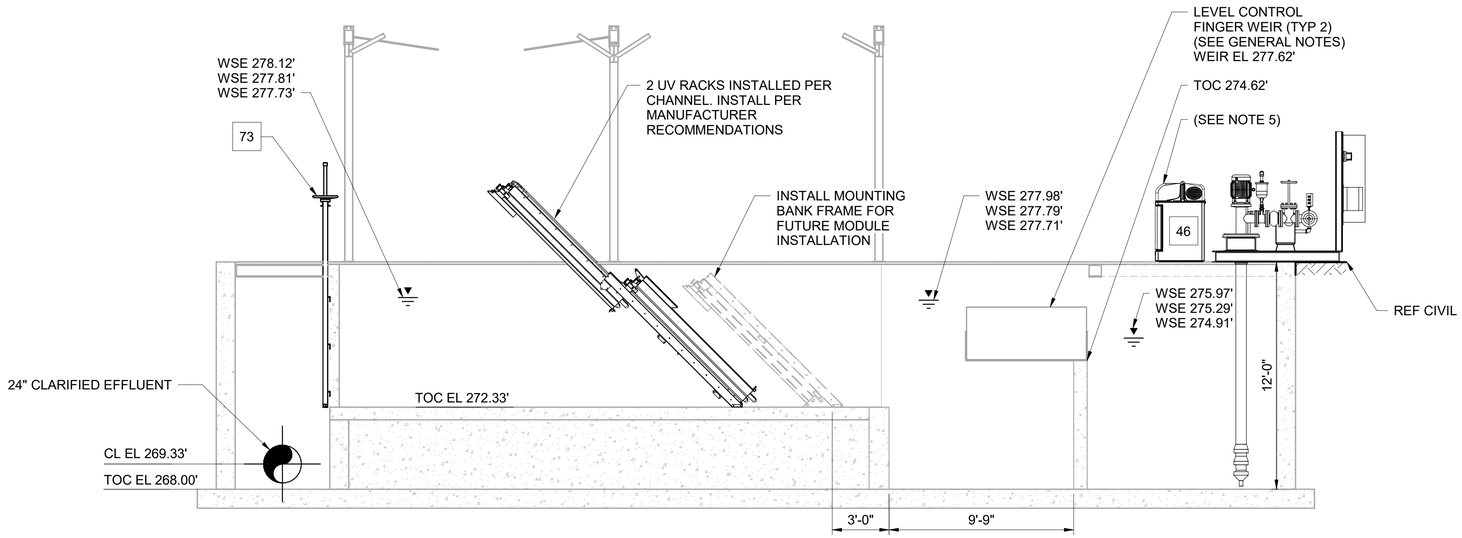

SECTION A 750D101

0 2' 4' 8'
SCALE IN FEET

GENERAL NOTES:

1. UV DISINFECTION WEIR SHALL BE CONSTRUCTED OF STAINLESS STEEL AND PROVIDED BY THE UV DISINFECTION MANUFACTURER.
2. SEE SHEET 100D604 FOR EQUIPMENT AND VALVE IDENTIFICATION CALLOUTS.
3. LAYOUT REFLECTS EQUIPMENT FROM A SINGLE MANUFACTURER. CONTRACTOR TO COORDINATE INSTALLATION REQUIREMENTS FOR ACTUAL EQUIPMENT SELECTED.
4. NON-POTABLE WATER REUSE SKID VALVES AND PIPES SHALL BE HEAT TRACED AND INSULATED TO PREVENT FROM FREEZING. COORDINATE WITH MANUFACTURER.
5. EFFLUENT AUTO SAMPLER SHALL BE A HACH AS950 REFRIGERATED SAMPLER, OR OWNER-APPROVED EQUAL. FIELD ROUTE TUBING INTO WET WELL BENEATH EQUIPMENT PER SAMPER MANUFACTURER'S RECOMMENDATION.

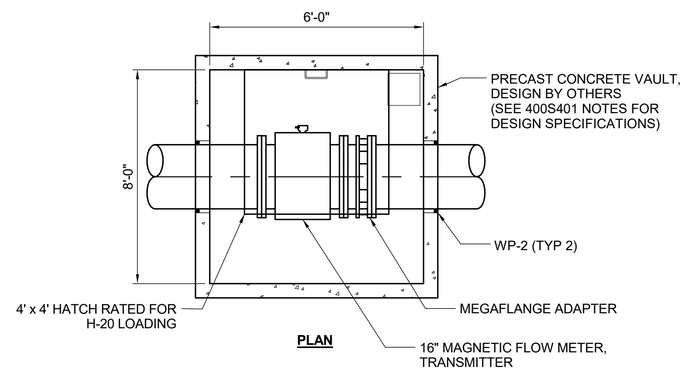

PLAN

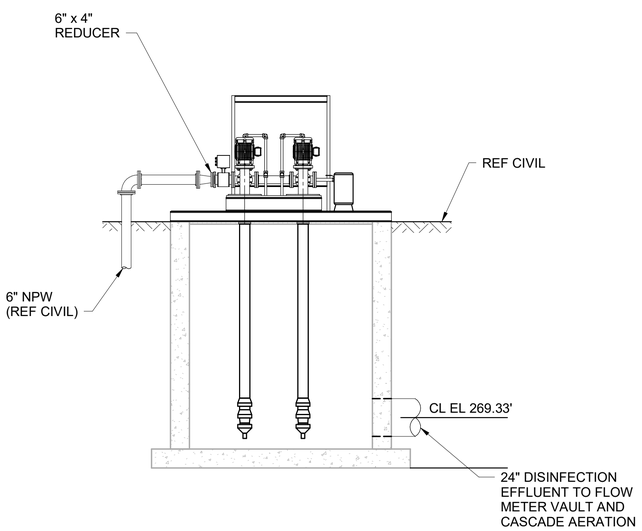

SECTION B 750D101

0 2' 4' 8'
SCALE IN FEET

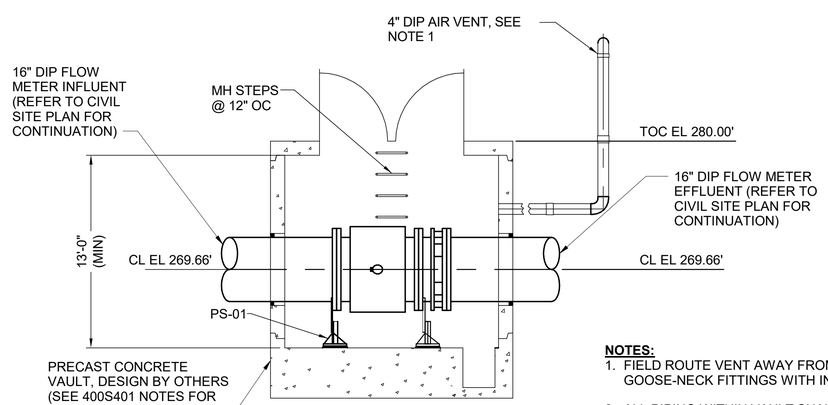

SECTION

EFFLUENT METER VAULT DETAIL
NOT TO SCALE

NOTES:

1. FIELD ROUTE VENT AWAY FROM STRUCTURE AND PROVIDE GOOSE-NECK FITTINGS WITH INSECT SCREEN.
2. ALL PIPING WITHIN VAULT SHALL BE DUCTILE IRON. TRANSITION TO DIP SHALL OCCUR OUTSIDE OF VAULT STRUCTURE.
3. INSTALL METER WITH A MINIMUM OF 72" FROM THE UPSTREAM REDUCER TO THE CENTER OF THE METER AND A MINIMUM OF 36" FROM THE CENTER OF THE METER TO THE DOWNSTREAM REDUCER.

GEORGIA REGISTERED No. PE048949 PROFESSIONAL ENGINEER TRENTON K. HOLLIS

Sealed: June 26th, 2024

no.	date	by	ckd	description
0	6/26/24	TKH	ALW	ISSUED FOR CONSTRUCTION

BURNS McDONNELL
4004 SUMMIT BLVD. NE, SUITE 1200
ATLANTA, GA 30319
770-587-4776
LICENSEE NO. PEF000100
AUTHORIZATION NO. J550903

date	detailed
APRIL 11, 2023	J. BENTRUP
designed	**checked**
T. HOLLIS	A. WADDOUPS

Perry
HOUSTON COUNTY, GEORGIA

EAST PERRY WWTF
UV DISINFECTION SECTION

project	contract
148538	

drawing 750D301 — **rev.** 0

sheet **of** **sheets**

file 148538_D_UV TREATMENT_2022

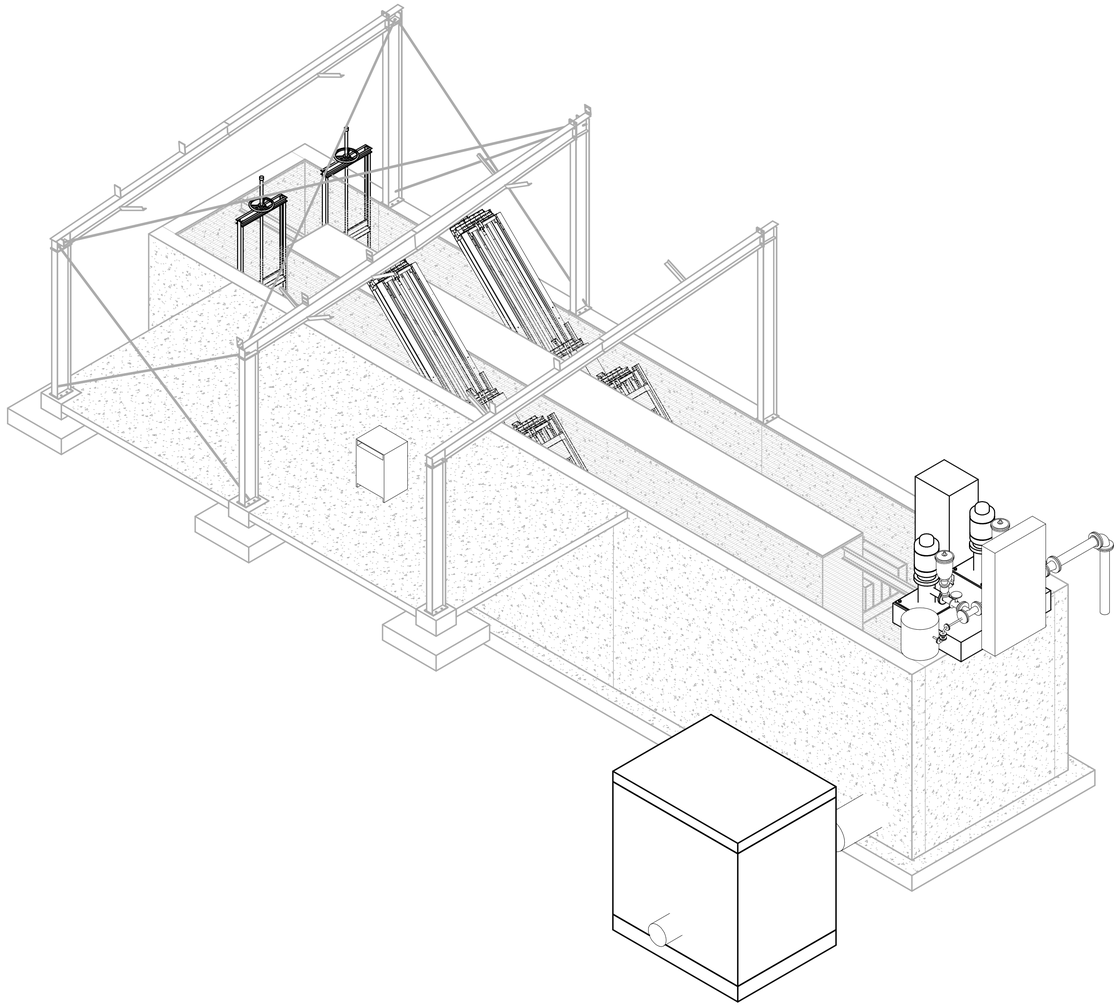

UV DISINFECTION ISOMETRIC

0 2' 4' 8'

SCALE IN FEET

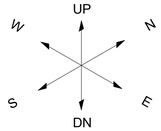

GEORGIA REGISTERED No. PE048949 PROFESSIONAL ENGINEER TRENTON K. HOLLIS

Sealed: June 26th, 2024

no.	date	by	ckd	description
0	6/26/24	TKH	ALW	ISSUED FOR CONSTRUCTION

BURNS McDONNELL
4004 SUMMIT BLVD. NE, SUITE 1200
ATLANTA, GA 30319
770-587-4776
LICENSEE NO. PEF000100
AUTHORIZATION NO. J550903

date	detailed
APRIL 11, 2023	J. BENTRUP
designed	**checked**
T. HOLLIS	A. WADDOUPS

Perry

HOUSTON COUNTY, GEORGIA

EAST PERRY WWTF

UV DISINFECTION ISOMETRIC

project	contract
148538	

drawing 750D701 – **rev.** 0

sheet of **sheets**

file 148538_D_TERTIARY TREATMENT_2022

Millimeters

Scale For Microfilming

Inches

no.	date	by	ckd	description
0	6/26/24	TKH	ALW	ISSUED FOR CONSTRUCTION

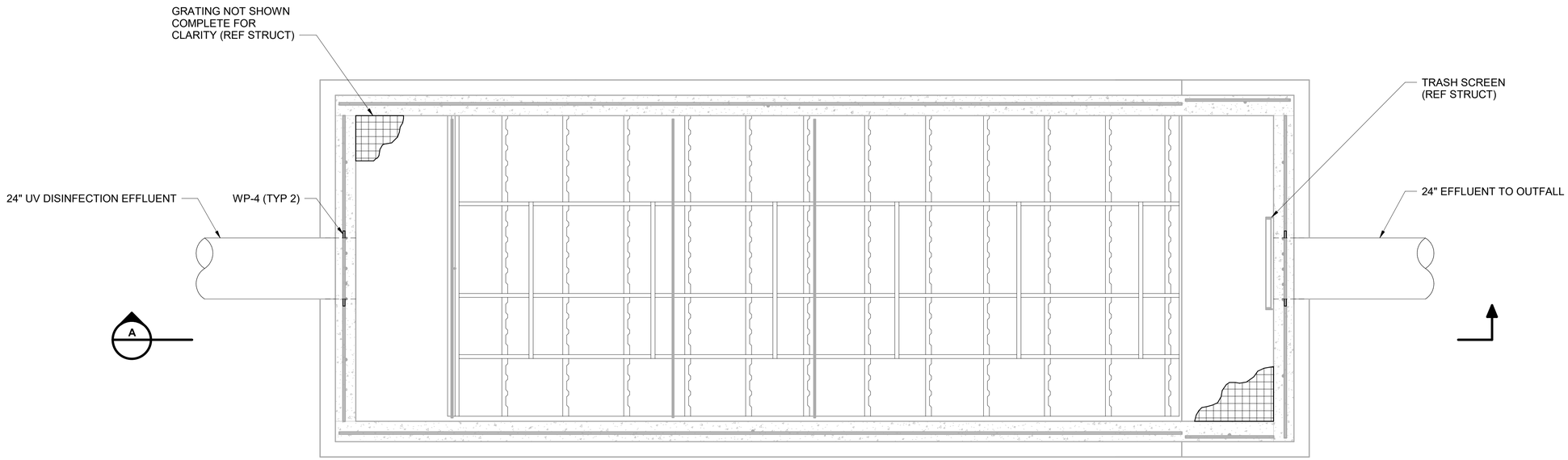

PLAN

0 1' 2' 4'
SCALE IN FEET

NORTH

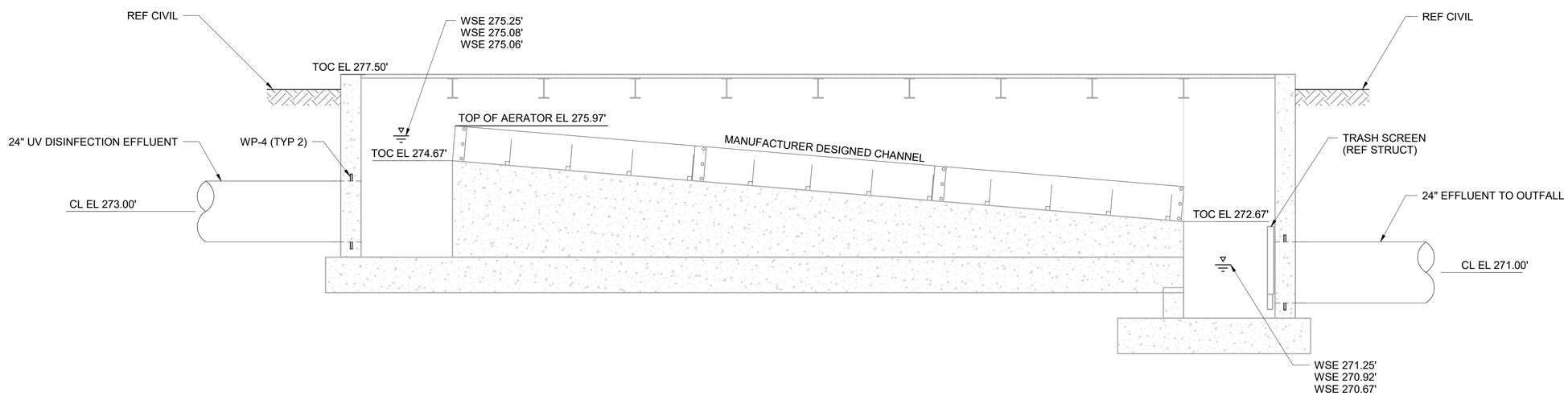

SECTION A

0 1' 2' 4'
SCALE IN FEET

GEORGIA REGISTERED No. PE048949 PROFESSIONAL ENGINEER TRENTON K. HOLLIS

Sealed: June 26th, 2024

BURNS McDONNELL
4004 SUMMIT BLVD. NE, SUITE 1200
ATLANTA, GA 30319
770-587-4776
LICENSEE NO. PEF000100
AUTHORIZATION NO. J550903

date	detailed
OCTOBER 18, 2023	J. BENTRUP
designed	**checked**
T. HOLLIS	A. WADDOUPS

Perry

HOUSTON COUNTY, GEORGIA

EAST PERRY WWTF
CASCADE AERATION
PLAN AND SECTION

project	contract
148538	

drawing 775D101 — **rev.** 0

sheet of **sheets**

file 148538_D_CASCADE AERATION_2022.rvt

GENERAL NOTES:

1. FIELD ROUTE BLOWER PIPING FROM HEADER TO DROPLEGS IN EACH ZONE.
2. ALL BLOWER PIPING BELOW 10 FEET ABOVE FINISHED WALKWAY FLOOR TO DROPLEG CONNECTION SHALL BE INSULATED AND JACKETED.

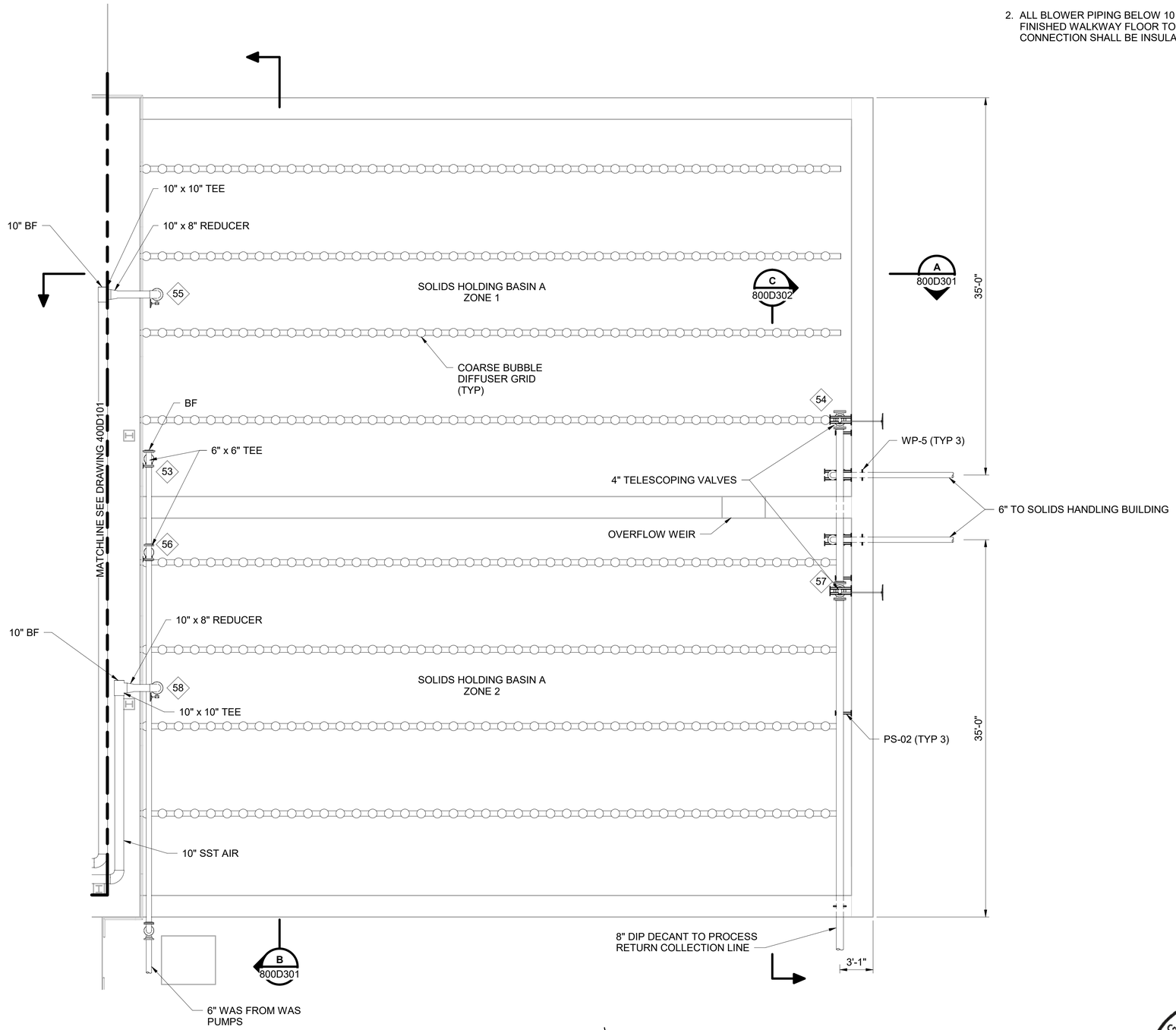

PLAN

0 4' 8' 12'
SCALE IN FEET

NORTH

no.	date	by	ckd	description
0	6/26/24	TKH	ALW	ISSUED FOR CONSTRUCTION

BURNS McDONNELL
4004 SUMMIT BLVD. NE, SUITE 1200
ATLANTA, GA 30319
770-587-4776
LICENSEE NO. PEF000100
AUTHORIZATION NO. J550903

date	detailed
AUGUST 3, 2023	J. BENTRUP
designed	**checked**
T. HOLLIS	A. WADDOUPS

Perry

HOUSTON COUNTY, GEORGIA

EAST PERRY WWTF
SOLIDS HOLDING BASIN A
PLAN

project	contract
148538	

drawing 800D101 — **rev.** 0

sheet **of** **sheets**

file 148538_D_PROCESS_2022.rvt

GEORGIA REGISTERED No. PE048949 PROFESSIONAL ENGINEER TRENTON K. HOLLIS

Sealed: June 26th, 2024

Scale For Microfilming: Millimeters / Inches

GENERAL NOTES:

1. MANUFACTURER SUPPLIED WALL BRACKET, ANCHOR BOLT SIZE AND NUMBER AS REQUIRED, SHALL BE ATTACHED TO WALL WITH CHEMICAL ANCHOR HILTI OR APPROVED EQUAL.
2. TELESCOPING VALVE SHALL BE INSTALLED SUCH THAT SIDE-MOUNTED HANDWHEEL OPERATOR IS ACCESSIBLE AND OPERABLE OUTSIDE THE SOLIDS HANDLING BASIN. VALVE SHALL INCLUDE VISUAL POSITION INDICATION AND RISING STEM.
3. ALL WETTED TELESCOPING VALVE COMPONENTS SHALL BE 304L STAINLESS STEEL UNLESS OTHERWISE NOTED. OPERATOR AND HANDWHEEL SHALL BE CAST IRON.
4. FIELD ROUTE BLOWER PIPING FROM HEADER TO DROPLEGS IN EACH ZONE.
5. INSTALL COARSE BUBBLE DIFFUSER GRIDS PER MANUFACTURER REQUIREMENTS.
6. DELINEATION OF CONTRACTOR AND MANUFACTURER SHOWN IS FOR SCOPE OF SUPPLY ONLY. CONTRACTOR SHALL BE RESPONSIBLE FOR INSTALLATION.

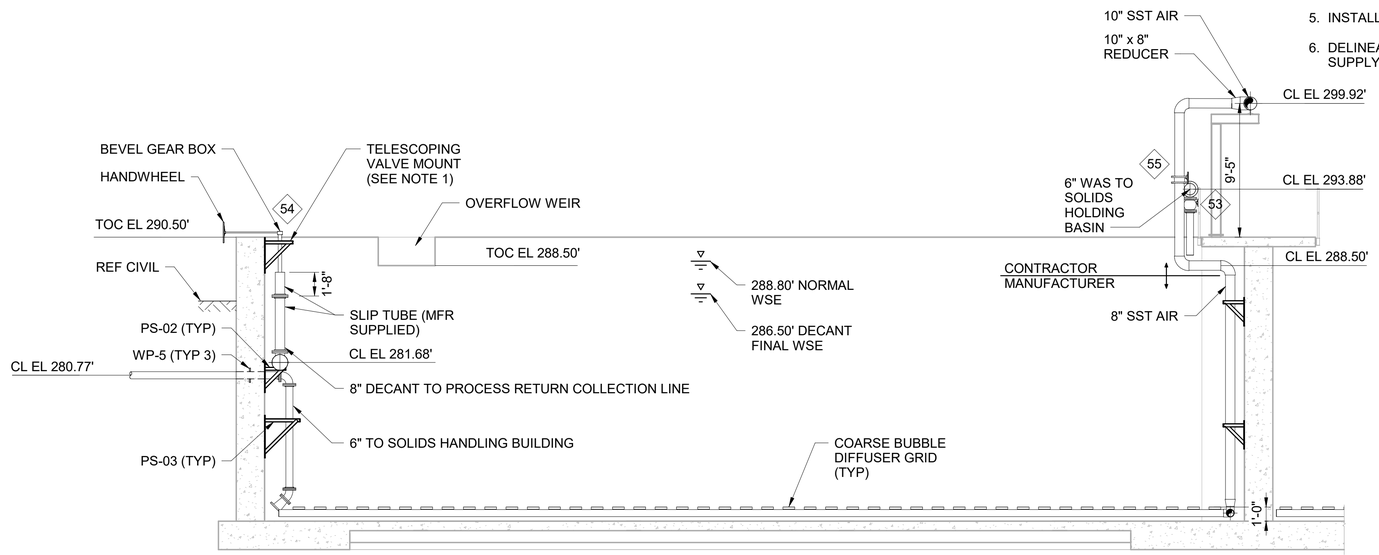

SECTION A 800D101

0 4' 8' 12'
SCALE IN FEET

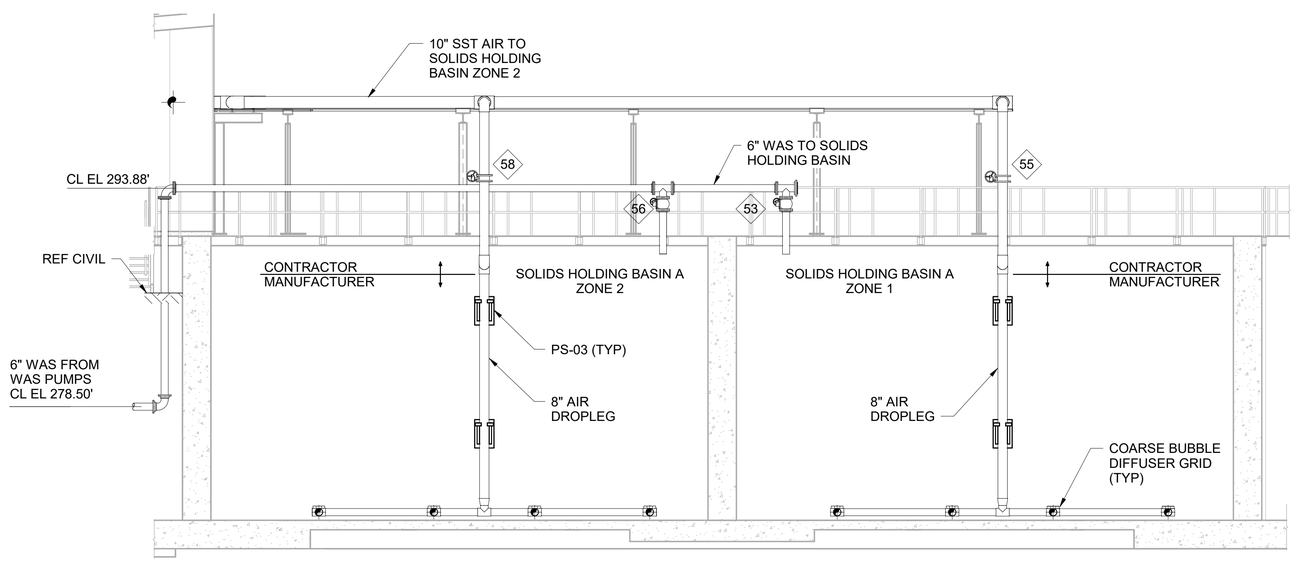

SECTION B 800D101

0 4' 8' 12'
SCALE IN FEET

no.	date	by	ckd	description
0	6/26/24	TKH	ALW	ISSUED FOR CONSTRUCTION

BURNS McDONNELL
4004 SUMMIT BLVD. NE, SUITE 1200
ATLANTA, GA 30319
770-587-4776
LICENSEE NO. PEF000100
AUTHORIZATION NO. J550903

date	detailed
AUGUST 3, 2023	J. BENTRUP
designed	**checked**
T. HOLLIS	A. WADDOUPS

Perry

HOUSTON COUNTY, GEORGIA

EAST PERRY WWTF
SOLIDS HOLDING BASIN A
SECTIONS SHEET I

project	contract
148538	

drawing 800D301 — **rev.** 0

sheet **of** **sheets**

file 148538_D_PROCESS_2022.rvt

GEORGIA REGISTERED No. PE048949 PROFESSIONAL ENGINEER TRENTON K. HOLLIS

Sealed: June 26th, 2024

no.	date	by	ckd	description
0	6/26/24	TKH	ALW	ISSUED FOR CONSTRUCTION

GENERAL NOTES:

1. MANUFACTURER SUPPLIED WALL BRACKET, ANCHOR BOLT SIZE AND NUMBER AS REQUIRED, SHALL BE ATTACHED TO WALL WITH CHEMICAL ANCHOR HILTI OR APPROVED EQUAL.
2. TELESCOPING VALVE SHALL BE INSTALLED SUCH THAT SIDE-MOUNTED HANDWHEEL OPERATOR IS ACCESSIBLE AND OPERABLE OUTSIDE THE SOLIDS HANDLING BASIN. VALVE SHALL INCLUDE VISUAL POSITION INDICATION AND RISING STEM.
3. ALL WETTED TELESCOPING VALVE COMPONENTS SHALL BE 304L STAINLESS STEEL UNLESS OTHERWISE NOTED. OPERATOR AND HANDWHEEL SHALL BE CAST IRON.
4. INSTALL COARSE BUBBLE DIFFUSER GRIDS PER MANUFACTURER REQUIREMENTS.

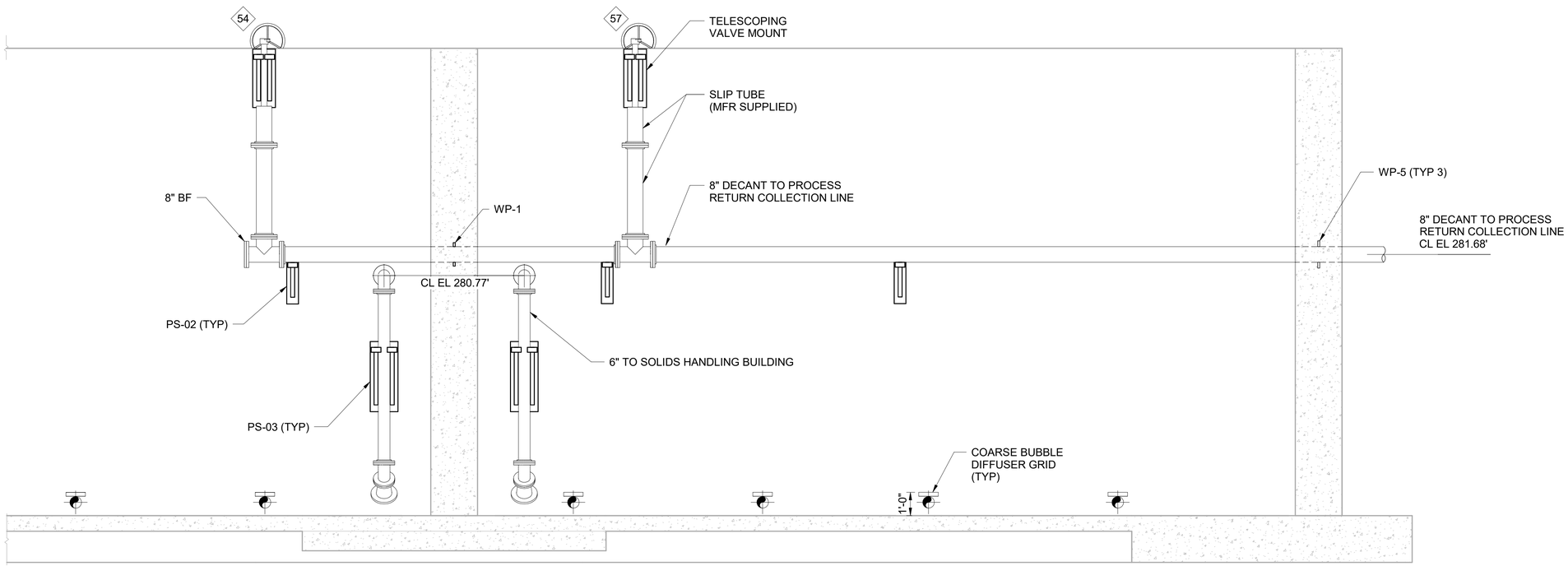

SECTION C 800D101

0 2' 4' 6'

SCALE IN FEET

Sealed: June 26th, 2024

BURNS McDONNELL
4004 SUMMIT BLVD. NE, SUITE 1200
ATLANTA, GA 30319
770-587-4776
LICENSEE NO. PEF000100
AUTHORIZATION NO. J550903

date	detailed
AUGUST 3, 2023	J. BENTRUP
designed	**checked**
T. HOLLIS	A. WADDOUPS

Perry

HOUSTON COUNTY, GEORGIA

EAST PERRY WWTF

SOLIDS HOLDING BASIN A
SECTIONS SHEET II

project	contract
148538	

drawing 800D302 – **rev.** 0

sheet **of** **sheets**

file 148538_D_PROCESS_2022.rvt

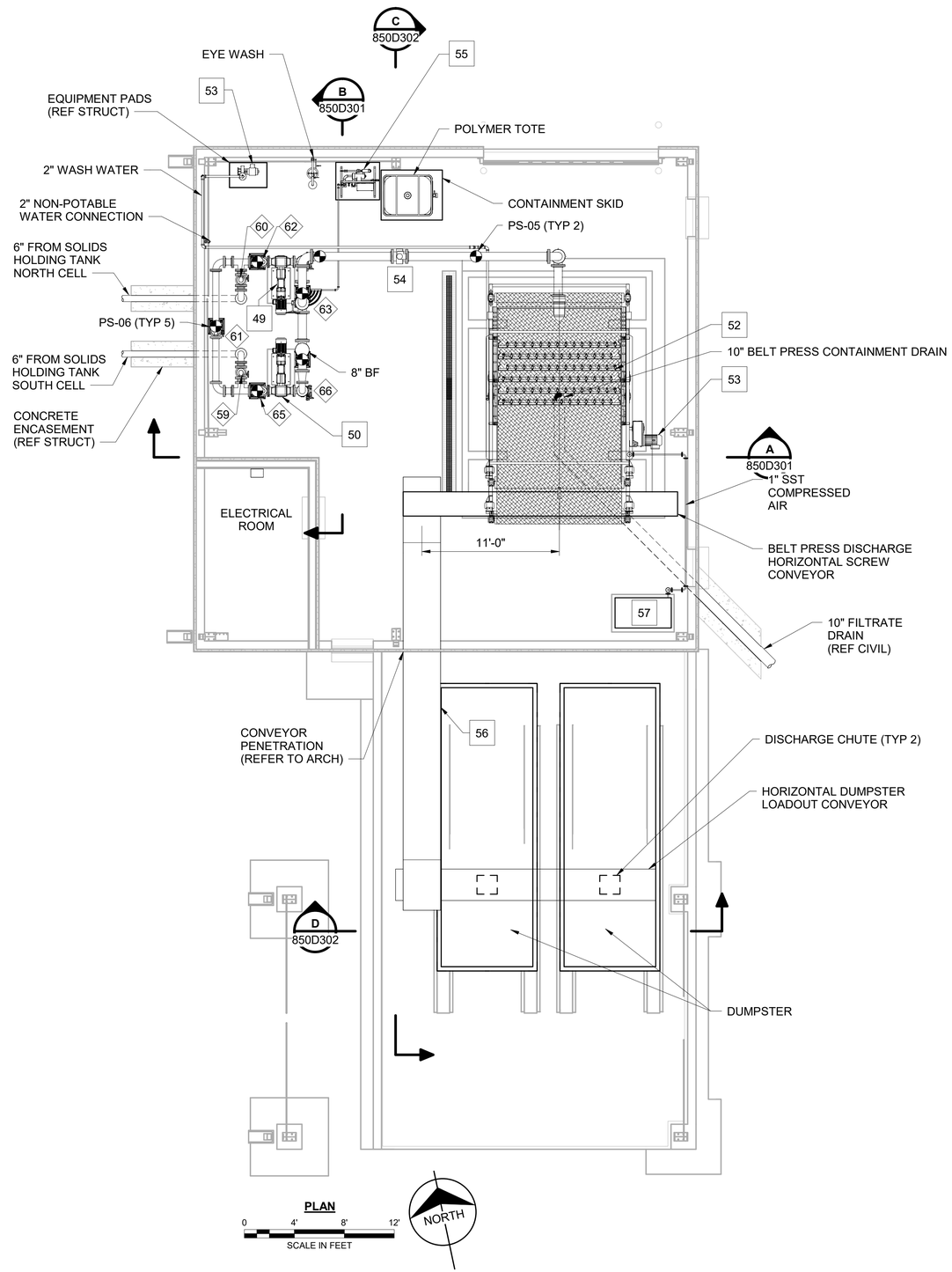

GENERAL NOTES:

1. SEE SHEET 100D604 FOR EQUIPMENT AND VALVE IDENTIFICATION AND CALLOUTS.
2. LAYOUT REFLECTS EQUIPMENT FROM A SINGLE MANUFACTURER. CONTRACTOR TO COORDINATE INSTALLATION REQUIREMENTS FOR ACTUAL EQUIPMENT SELECTED.
3. REFER TO STRUCTURAL FOR EQUIPMENT PAD DESIGN. COORDINATE SIZE AND HEIGHT OF EQUIPMENT PADS WITH EQUIPMENT VENDOR AND CENTERLINE ELEVATIONS.
4. CONTRACTOR SHALL COORDINATE WITH BELT PRESS VENDOR AND CONVEYOR VENDOR FOR CONVEYOR LAYOUT AND EQUIPMENT OPERATION FUNCTIONALITY.

no.	date	by	ckd	description
0	6/26/24	TKH	ALW	ISSUED FOR CONSTRUCTION

GEORGIA REGISTERED No. PE048949 PROFESSIONAL ENGINEER TRENTON K. HOLLIS

Sealed: June 26th, 2024

BURNS McDONNELL
4004 SUMMIT BLVD. NE, SUITE 1200
ATLANTA, GA 30319
770-587-4776
LICENSEE NO. PEF000100
AUTHORIZATION NO. J550903

date	detailed
APRIL 12, 2023	J. BENTRUP
designed	**checked**
T. HOLLIS	A. WADDOUPS

Perry

HOUSTON COUNTY, GEORGIA

EAST PERRY WWTF
SOLIDS HANDLING
PLAN

project	contract
148538	

drawing 850D101 – **rev.** 0

sheet of **sheets**

file 148538_SOLIDS HANDLING_2022.rvt

GENERAL NOTES:

1. SEE SHEET 100D604 FOR EQUIPMENT AND VALVE IDENTIFICATION AND CALLOUTS.
2. LAYOUT REFLECTS EQUIPMENT FROM A SINGLE MANUFACTURER. CONTRACTOR TO COORDINATE INSTALLATION REQUIREMENTS FOR ACTUAL EQUIPMENT SELECTED.
3. COORDINATE BELT PRESS CONTAINMENT CURB WITH MANUFACTURER FOR BELT PRESS MOUNTING AND DISCHARGE CHUTE AND CONVEYOR PLACEMENT.
4. REFER TO STRUCTURAL FOR EQUIPMENT PAD DESIGN. COORDINATE SIZE AND HEIGHT OF EQUIPMENT PADS WITH EQUIPMENT VENDOR AND CENTERLINE ELEVATIONS.
5. COORDINATE REQUIRED ELEVATION OF BELT PRESS WITH BELT PRESS MANUFACTURER AND CONVEYOR MANUFACTURER. CONTRACTOR SHALL ADJUST INFLUENT PROCESS WATER, AIR, AND SLUDGE PIPING ELEVATIONS TO PROCESS CONNECTIONS ON BELT PRESS. LAYOUT SHOWN IS BASED ON A 5'-5-1/2" BELT PRESS DISCHARGE HEIGHT ABOVE FINISHED FLOOR.

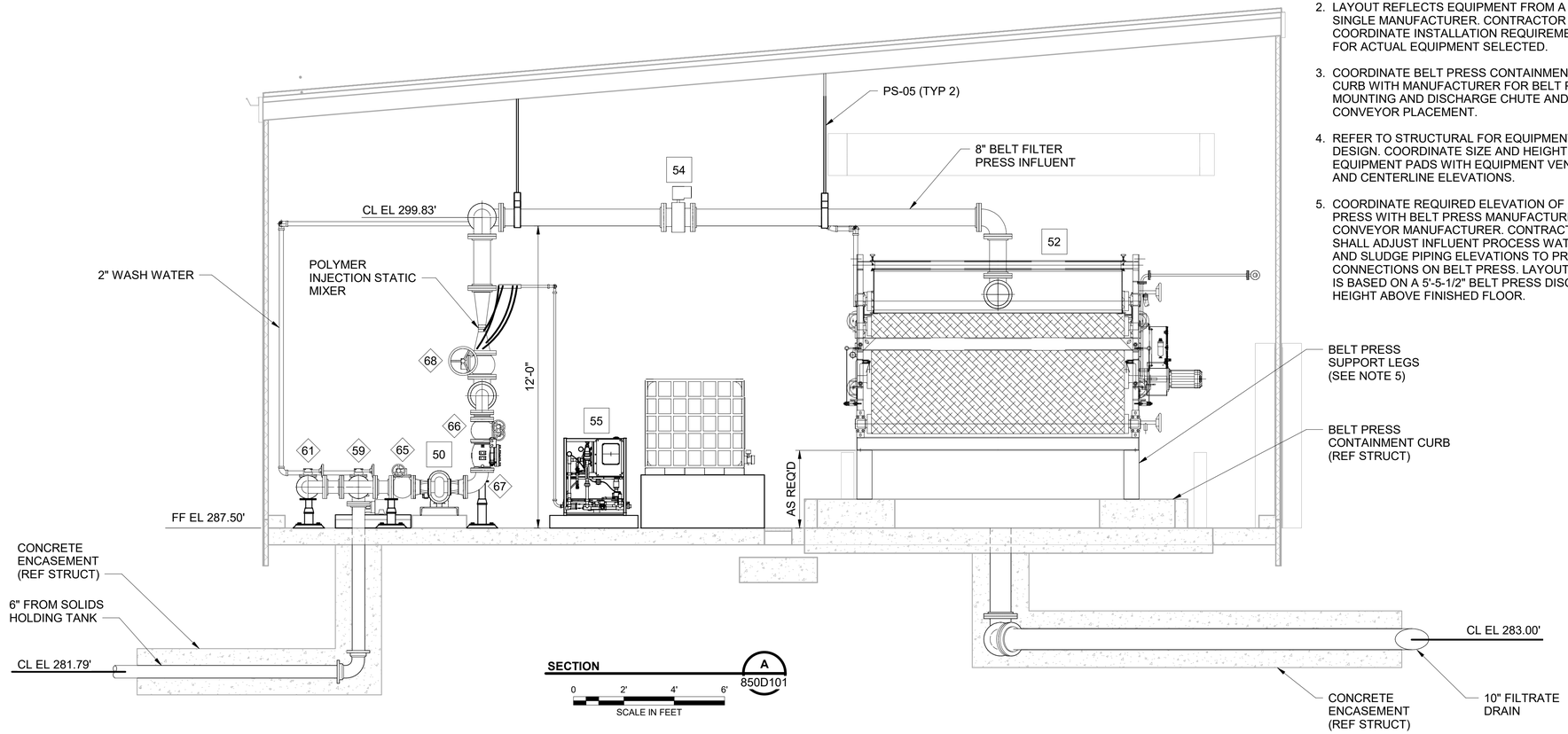

SECTION A 850D101

0 2' 4' 6'
SCALE IN FEET

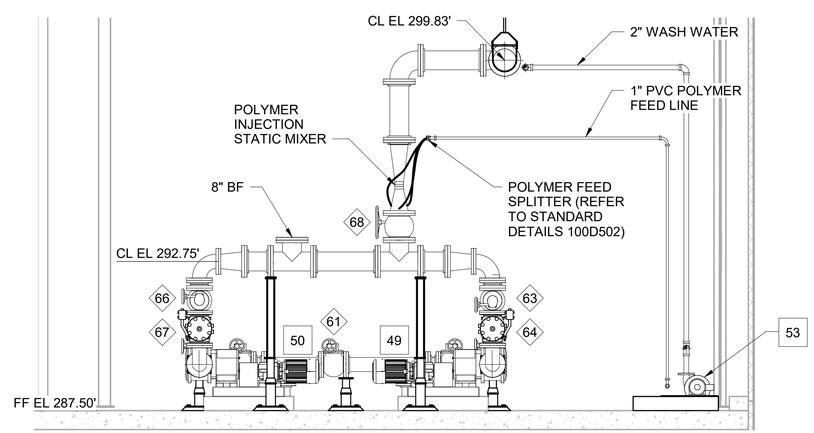

SECTION B 850D101

0 2' 4' 6'
SCALE IN FEET

GEORGIA REGISTERED No. PE048949 PROFESSIONAL ENGINEER TRENTON K. HOLLIS

Sealed: June 26th, 2024

no.	date	by	ckd	description
0	6/26/24	TKH	ALW	ISSUED FOR CONSTRUCTION

BURNS McDONNELL
4004 SUMMIT BLVD. NE, SUITE 1200
ATLANTA, GA 30319
770-587-4776
LICENSEE NO. PEF000100
AUTHORIZATION NO. J550903

date	detailed
APRIL 12, 2023	J. BENTRUP
designed	**checked**
T. HOLLIS	A. WADDOUPS

Perry

HOUSTON COUNTY, GEORGIA

EAST PERRY WWTF
SOLIDS HANDLING
SECTIONS SHEET I

project	contract
148538	

drawing 850D301 – **rev.** 0

sheet of **sheets**

file 148538_BELT PRESS_2022.rvt

Scale For Microfilming: Millimeters / Inches

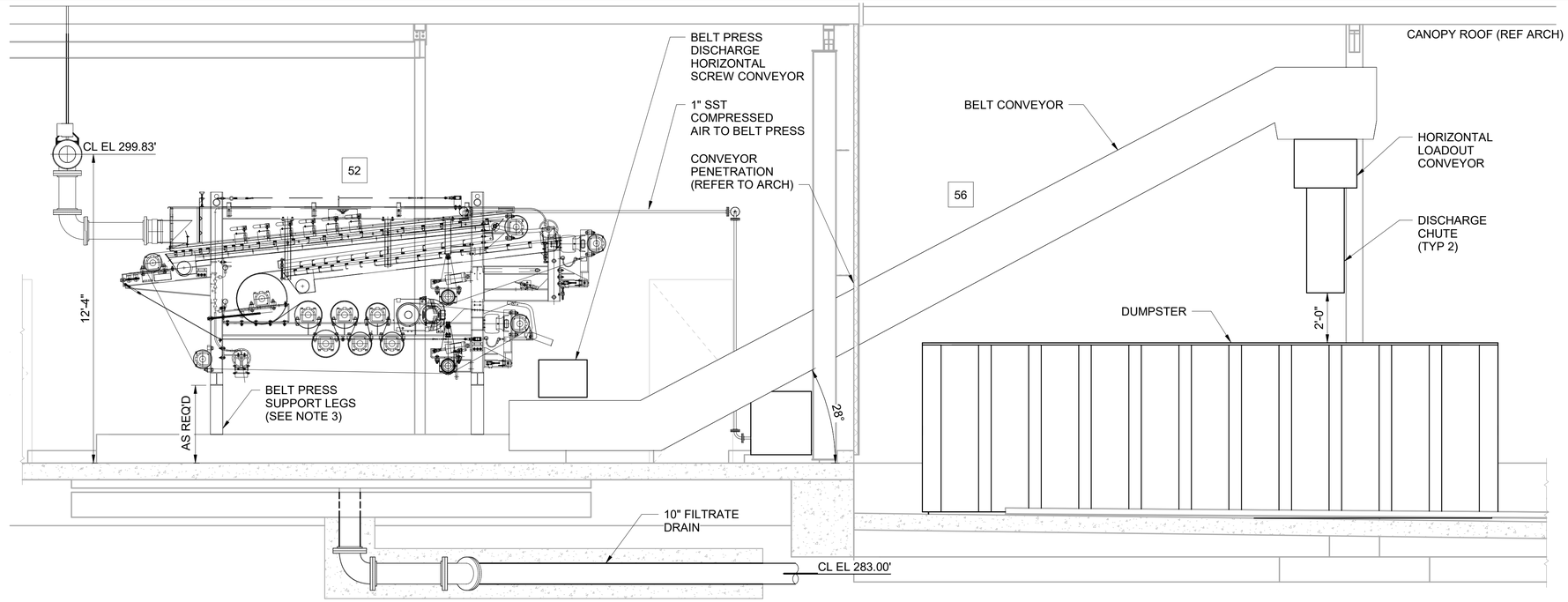

SECTION C 850D101

0 2' 4' 6'
SCALE IN FEET

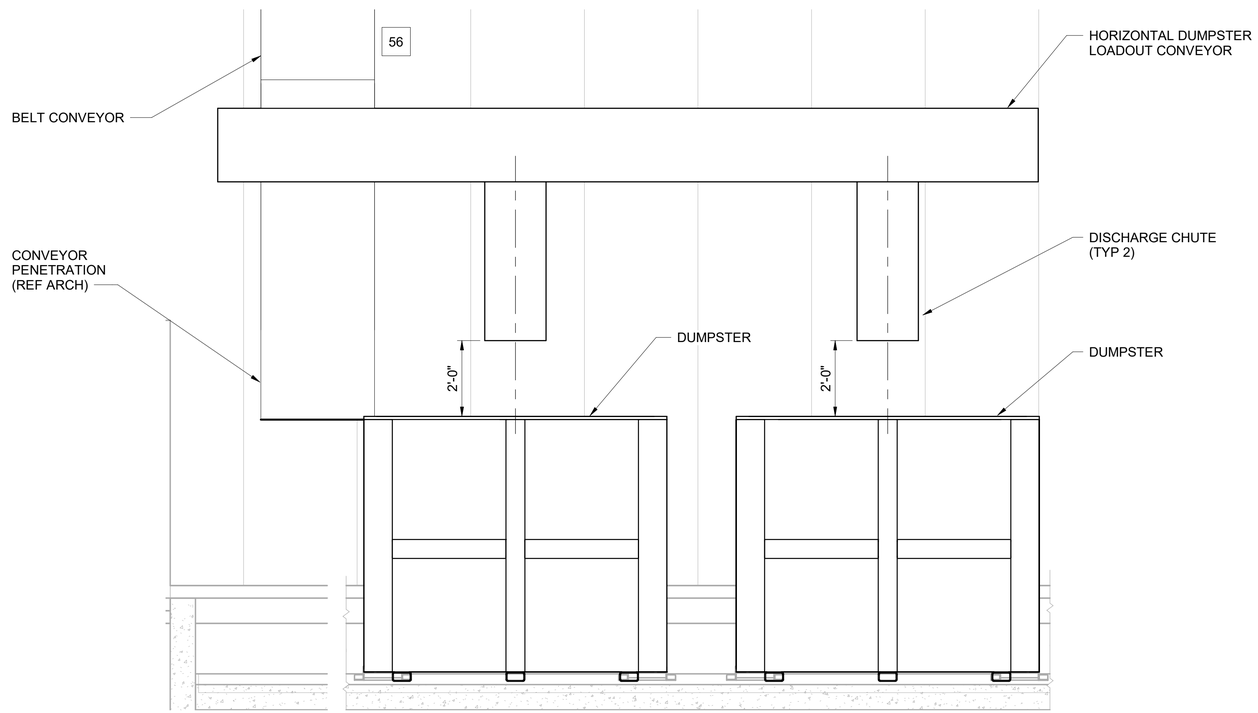

SECTION D 850D101

0 1' 2' 4'
SCALE IN FEET

GENERAL NOTES:

1. REFER TO STRUCTURAL FOR EQUIPMENT PAD DESIGN. COORDINATE SIZE AND HEIGHT OF EQUIPMENT PADS WITH EQUIPMENT VENDOR AND CENTERLINE ELEVATIONS.
2. CONTACTOR SHALL FIELD ROUTE COMPRESSED AIR PIPING FROM AIR COMPRESSOR SUPPLIED BY BELT PRESS VENDOR TO BELT PRESS. INSTALL ALL REQUIRED ISOLATION VALVES.
3. COORDINATE REQUIRED ELEVATION OF BELT PRESS WITH BELT PRESS MANUFACTURER AND CONVEYOR MANUFACTURER. CONTRACTOR SHALL ADJUST INFLUENT PROCESS WATER, AIR, AND SLUDGE PIPING ELEVATIONS TO PROCESS CONNECTIONS ON BELT PRESS. LAYOUT SHOWN IS BASED ON A 5'-5-1/2" BELT PRESS DISCHARGE HEIGHT ABOVE FINISHED FLOOR.

GEORGIA REGISTERED No. PE048949 PROFESSIONAL ENGINEER TRENTON K. HOLLIS

Sealed: June 26th, 2024

no.	date	by	ckd	description
0	6/26/24	TKH	ALW	ISSUED FOR CONSTRUCTION

BURNS McDONNELL
4004 SUMMIT BLVD. NE, SUITE 1200
ATLANTA, GA 30319
770-587-4776
LICENSEE NO. PEF000100
AUTHORIZATION NO. J550903

date	detailed
APRIL 12, 2023	J. BENTRUP
designed	**checked**
T. HOLLIS	A. WADDOUPS

Perry
HOUSTON COUNTY, GEORGIA

EAST PERRY WWTF
SOLIDS HANDLING
SECTIONS SHEET II

project	contract
148538	

drawing	rev.
850D302 –	0

sheet of sheets

file 148538_BELT PRESS_2022.rvt

no.	date	by	ckd	description
0	6/26/24	TKH	ALW	ISSUED FOR CONSTRUCTION

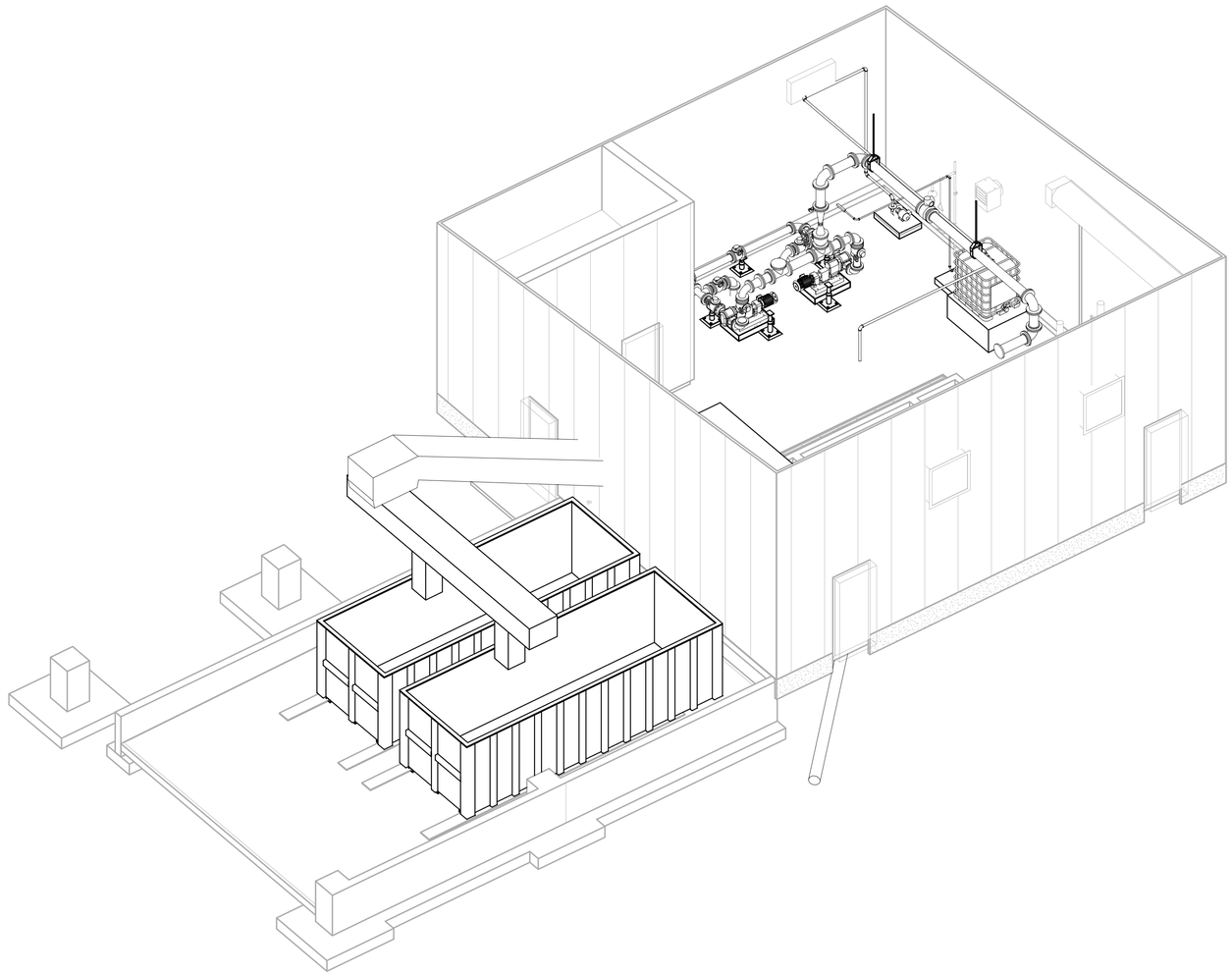

SOLIDS HANDLING ISOMETRIC

0 4' 8' 12'
SCALE IN FEET

UP
DN
W
N
S
E

GEORGIA
REGISTERED
No. PE048949
PROFESSIONAL
ENGINEER
TRENTON K. HOLLIS

Sealed: June 26th, 2024

BURNS McDONNELL
4004 SUMMIT BLVD. NE, SUITE 1200
ATLANTA, GA 30319
770-587-4776
LICENSEE NO. PEF000100
AUTHORIZATION NO. J550903

date	detailed
APRIL 12, 2023	J. BENTRUP
designed	**checked**
T. HOLLIS	A. WADDOUPS

Perry
HOUSTON COUNTY, GEORGIA

EAST PERRY WWTF
SOLIDS HANDLING
ISOMETRIC

project	contract
148538	

drawing 850D701 – **rev.** 0

sheet of **sheets**

file 148538_BELT PRESS_2022.rvt

Millimeters
Scale For Microfilming
Inches

VALVES SYMBOLS

- GATE (OR GENERIC)
- CHECK
- STOP CHECK
- GLOBE
- BUTTERFLY
- NEEDLE
- BALL
- GENERIC ROTARY (1/4 TURN)
- PLUG
- DIAPHRAGM
- 3-WAY
- 4-WAY
- PINCH
- ANGLE
- KNIFE
- SURGE RELIEF VALVE
- AIR RELEASE VALVE
- MUD VALVE
- TELESCOPING VALVE
- FLAP VALVE

PIPING FITTINGS

- FLANGE (W/BLIND FLANGE)
- WELDED CONNECTION
- WELDOLET
- REMOVABLE CAP
- CONCENTRIC (OR GENERIC) REDUCER
- ECCENTRIC REDUCER
- HOSE CONNECTION
- SPACER
- BLANK
- OPEN FIGURE 8 BLIND
- CLOSED FIGURE 8 BLIND
- REMOVABLE PLUG
- COUPLING
- BLIND FLANGE

PIPING SPECIALTY ITEMS

- Y-TYPE STRAINER
- CONICAL STRAINER
- T-TYPE STRAINER
- DUPLEX STRAINER
- BFP — BACKFLOW PREVENTER
- BASKET STRAINER
- TEMPORARY STRAINER
- FILTER
- EJECTOR/EDUCTOR
- PULSATION DAMPENER
- S — IN-LINE SILENCER
- S — VENT SILENCER
- FLEXIBLE HOSE
- EXPANSION JOINT
- DAMPER
- BREATHER
- IN-LINE MIXER
- DIVERTER VALVE
- ROTARY VALVE
- EXCESS FLOW VALVE
- EXHAUST HEAD
- DRAIN
- DIFFUSER
- VENT TO ATMOSPHERE OR EXTERIOR
- PIPE WITH HEATING CABLE
- DEMISTER
- DESTRUCT CATAYST
- CALIBRATION COLUMN
- COOLING COILS
- OPEN DRAIN
- AIR GAP
- VENT
- VACUUM REGULATOR VALVE
- ROTAMETER
- SLIDE GATE
- WEIR PLATE
- PARSHALL FLUME
- VOLUMETRIC FLOW METER
- CHEMICAL SEAL/DIAPHRAGM
- M — ELECTRICALLY ACTUATED VALVE
- M — MAGNETIC FLOW METER
- PULL GATE

MISCELLANEOUS SYMBOLS

- PILOT LIGHT OR GAUGE GLASS ILLUMINATOR
- DUAL FUNCTION OR INSTRUMENTS SHARING COMMON HOUSING
- I — UNDEFINED INTERLOCK LOGIC
- FC 123099 — INSTRUMENT WITH LONG TAG NUMBER
- DIRECTION OF FLOW (ARROW)
- P XXXX — PURGE CONNECTION (XXXX = PURGE PRESSURE AND MEDIUM)
- SC XX/YY — SAMPLE CONNECTION (XX/YY = TYPE/NUMBER)
- # — NOTE REFERENCE SYMBOL (XX = NOTE NUMBER, ROTATE ARROW AS REQUIRED)
- T XXX — TIE-IN SYMBOL (XXXX = IDENTIFICATION NUMBER)
- POINT OF CHANGE IN LINE CLASS OR INSULATION REQUIREMENT
- SP NO — PIPING SPECIALTY ITEM
- CONSTANT HEAD FLOW CONTROLLER
- UPFLOW SATURATOR
- GRADE

CONTROL VALVE ACTUATOR SYMBOLS

- MANUAL OPERATOR
- DIAPHRAGM
- PRESSURE BALANCED DIAPHRAGM
- HANDWHEEL - USED WITH ANY ACTUATOR
- CYLINDER/PISTON
- M — MOTOR OPERATED
- E/H — ELECTRO-HYDRAULIC
- S — SINGLE SOLENOID
- S R — SINGLE SOLENOID WITH REMOTE RESET
- S R — SINGLE SOLENOID WITH MANUAL RESET
- S FC — TYPICAL CONTROL VALVE WITH POSITIONER AND SOLENOID
- O/C — VANE O/C OPEN/CLOSE µ MODULATING

NOTES:

1. THIS LEGEND IS TAKEN FROM A STANDARD PROCESS LEGEND AND NOT ALL ITEMS OR EQUIPMENT AS DESIGNATED HEREON ARE USED ON THIS PROJECT.
2. SOME ABBREVIATIONS MAY NOT BE USED.

GEORGIA REGISTERED No. PE048949 PROFESSIONAL ENGINEER TRENTON K. HOLLIS

Sealed: June 26th, 2024

no.	date	by	ckd	description
0	6/26/24	AF	JJL	ISSUED FOR CONSTRUCTION

BURNS McDONNELL
4004 SUMMIT BLVD. NE, SUITE 1200
ATLANTA, GA 30319
770-587-4776
LICENSEE NO. PEF000100
AUTHORIZATION NO. J550903

date	detailed
MARCH 28, 2023	J. BENTRUP
designed	checked
T. HOLLIS	J. LI

Perry

HOUSTON COUNTY, GEORGIA

EAST PERRY WWTF

P&ID LEGEND, ABBREVIATIONS, AND GENERAL NOTES SHEET 1

project 148538 | contract

drawing **100DI601** — rev. **0**

sheet of sheets

file 148538_100DI601.DWG

C:\USERS\BDBROCHUE\APPDATA\LOCAL\AUTODESK\AUTOCAD PLANT 3D\COLLABORATIONCACHE\148538_EASTWWTP_V2022\PID DWG\148538_100DI601.DWG 6/25/2024 10:31 AM BDBROCHUE

no.	date	by	ckd	description
0	6/26/24	AF	JJL	ISSUED FOR CONSTRUCTION

INSTRUMENT SOCIETY OF AMERICA

LETTER	FIRST LETTER(S)		SUCCEEDING LETTER		
	PROCESS OR INITIATING VARIABLE	MODIFIER	READOUT OR PASSIVE FUNCTION	OUTPUT FUNCTION	MODIFIER
A	ANALYSIS (*)		ALARM		
B	BURNER, COMBUSTION		USERS CHOICE (*)	CLOSE,STOP,DECREASE	USERS CHOICE (*)
C	CONDUCTIVITY			CONTROL	CLOSED
D	DENSITY (SG)	DIFFERENTIAL		OPEN,START,INCREASE	
E	VOLTAGE		SENSOR (PRIMARY ELEMENT)	EMERGENCY	
F	FLOW RATE	RATIO/BIAS			
G	GAUGE		GLASS, VIEWING	GATE	
H	HAND (MANUAL)				HIGH
I	CURRENT (AMPS)		INDICATE		
J	POWER	SCAN			
K	TIME, SCHEDULE	RATE		CONTROL STATION	
L	LEVEL		LIGHT		LOW
M	MOISTURE, MOTOR	MOMENTARY			MIDDLE, INTRMDT
N	TORQUE		USERS CHOICE (*)	ISOLATOR	ON, OPERATE
O	USERS CHOICE (*)		ORIFICE		OPENED
P	PRESSURE, VAC		POINT (TEST CONN)		
Q	QUANTITY	INTEGRATE, TOTALIZE			
R	RADIATION		RECORD, PRINT		
S	SPEED, FREQUENCY	SAFETY		SWITCH	
T	TEMPERATURE			TRANSMIT	
U	MULTIVARIABLE (*)		MULTIFUNCTIONAL (*)		
V	VIBRATION			VALVE, DAMPER	
W	WEIGHT, FORCE		WELL		
X	UNCLASSIFIED (*)	X-AXIS	UNCLASSIFIED (*)	TRANSDUCER	
Y	EVENT, STATE (*)	Y-AXIS		RELAY, COMPUTER	
Z	POSITION	Z-AXIS		DRIVE, ACTUATOR	

(*) WHEN USED EXPLANATION IS SHOWN ADJACENT TO INSTRUMENT SYMBOL.

PLC I/O SYMBOLS

- OIT — OPERATOR INTERFACE TERMINAL
- VENDOR PROVIDED PANELLABEL

INSTRUMENT AND FUNCTION SYMBOLS

- XX YYY — INSTRUMENT
- HS YYY — HAND SWITCH
- YL YYY — INDICATING LIGHT
- XX YYY — SHARE DISPLAY, SHARED CONTROL
- I — INTERLOCK LOGIC
- ULTRASONIC
- RADAR
- FLOAT LEVEL SWITCH
- M — MAGNETIC FLOW METER
- T — THERMAL MASS FLOW METER
- ROTAMETER
- XX YYY — PLC I/O POINT
- XX YYY — INSTRUMENT, VENDOR PROVIDED

INSTRUMENT IDENTIFICATION

TAG NUMBER: AAA-BBB-XX-YYY

- **LOCATION DESIGNATOR**
- **EQUIPMENT DESIGNATOR**
- **ISA FIRST LETTER**
- **INSTRUMENT/LOOP NUMBER**

BBB ZZZ — XX YYY; BBB ZZZ — XX YYY; BBB ZZZ — XX YYY

XX = INSTRUMENT TYPE
YYY = NUMBER
ZZZ = DESCRIPTOR:

CL	CLOSE
COMB	COMBUSTION (LEL)
DO	DISSOLVED OXYGEN
ES	EMERGENCY STOP
FAIL	FAILURE
FOR	FOWARD
FR	FORWARD-REVERSE
HA	HAND-AUTO
HOA	HAND-OFF-AUTO
HOR	HAND-OFF-REMOTE
IAS	INSTRUMENT AIR SUPPLY
L	LOCAL
LOR	LOCAL-OFF-REMOTE
LR	LOCAL-REMOTE
LWCO	LOW WATER CUT OFF
OP	OPEN
O/C	OPEN-CLOSE
OL	OVERLOAD
O/C/A	OPEN-CLOSE-AUTO
O/O	ON-OFF
O/S/C	OPEN-STOP-CLOSE
ORP	OXIDATION-REDUCTION POTENTIAL
REV	JOG-REVERSE
RUN	RUNNING
S/S	START-STOP
STR	START
STP	STOP

LINESTYLES AND INTERFACE SYMBOLS

- PROCESS LINE
- ELECTRICAL SIGNAL
- ETHERNET COMMUNICATION
- SKID BOUNDARY/VENDOR SUPPLIED
- FUTURE EQUIPMENT BOUNDARY
- DIRECTION OF FLOW
- CROSSOVER - NO CONNECTION

PROCESS

CONNECTOR NUMBER — SERVICE DESCRIPTION — P&ID NO. — ORIGIN/ESTINATION

INTERFACE FROM PROCESS NOT SHOWN

SIGNAL

CONNECTOR NUMBER — SERVICE DESCRIPTION — P&ID NO. — ORIGIN/ESTINATION

INTERFACE FROM PROCESS EXTERNAL TO PROJECT

BROKEN SIGNAL LINE X = SAME SHEET DESTINATION NO.

CONTROL INTERLOCK

EQUIPMENT TAG NAME STRUCTURE

AAA - BBB - X X Y Z

- FACILITY AREA OR SYSTEM IDENTIFIER (SEE TABLE BELOW)
- EQUIPMENT/INSTRUMENT IDENTIFIER (SEE TABLE BELOW)
- LOOP NUMBER
- TRAIN
- UNIT NUMBER
- UNIT MODIFER (WHEN APPLICABLE)

FACILITY AREA OR SYSTEM IDENTIFIER

IDENTIFIER (AAA)	IDENTIFIER DESCRIPTION	IDENTIFIER (AAA)	IDENTIFIER DESCRIPTION
AB1	AERATION BASIN 1	SLD	SLUDGE HOLDING
AB2	AERATION BASIN 1	SP	SLUDGE PUMPING
ADM	ADMINISTRATIVE BUILDING	HW	HEADWORKS BUILDING
AER	AERATION - COMMON	ANA1	ANAEROBIC BASIN 1
ALM	ALUM FEED	ANA2	ANAEROBIC BASIN 2
ANB	ANAEROBIC BASIN/SPLITTER	ANX1	ANOXIC BASIN 1
CLA	CLARIFIER - COMMON	ANX2	ANOXIC BASIN 2
CLR1	CLARIFIER 1	BP	BELT PRESS
CLR2	CLARIFIER 2	SOL	SOLIDS HANDLING
		TF	TERTIARY FILTER
		UV	ULTRAVIOLET DISINFECTION
		WAS	WASTE ACTIVATED SLUDGE
		RAS	RETURN ACTIVATED SLUDGE
		PR	PROCESS RETURN

EQUIPMENT IDENTIFIER

IDENTIFIER (BBB)	IDENTIFIER DESCRIPTION	IDENTIFIER (BBB)	IDENTIFIER DESCRIPTION
AC	AIR COMPRESSOR	NSW	NETWORK SWITCH
ACP	ACCESS CONTROL PANEL	OIT	OPERATOR INTERFACE TERMINAL
AD	AIR DRYER	OWS	OPERATOR WORKSTATION
AS	ACOUSTIC SILENCER	PMP	PUMP
ATS	AUTOMATIC TRANSFER SWITCH	PCHV	PINCH VALVE
BFP	BELT FILTER PRESS CONTROL PANEL	PCS	PLANT CONTROL SYSTEM
BFV	BUTTERFLY VALVE	PD	PULSATION DAMPER
B	BLOWER	PDP	POWER DISTRIBUTION PANEL
BV	BALL VALVE	PG	PULL GATE
C	COMPRESSOR	PLC	PROGRAMMABLE LOGIC CONTROLLER
CB	CIRCUIT BREAKER	PNL	LIGHTING PANEL
CC	CALIBRATION COLUMN	PP	POWER PANEL
CD	CONTROL DAMPER	PRV	PRESSURE REDUCING VALVE
CP	CONTROL PANEL	PSU	POWER SUPPLY UNIT
CS	CONTROL STATION	PV	PLUG VALVE
CU	CONDENSING UNIT	RAW	RAW WATER SPLITTER
CV	CHECK VALVE	REG	REGULATOR
CW	CLEAR WELL	RO	ROTAMETER
DRV	DRIVE / DRIVE MOTOR	SA	SODA ASH SILOS
DS	DISCONNECT SWITCH	SC	SECONDARY CLARIFIER
EPS	ELECTRIC DUCT HEATER	SCA	SCALE
ES	EMERGENCY STOP	SCN	SCREENING CONTROL PANEL
FCV	FLOW CONTROL VALVE	SF	SUPPLY FAN
GAS	HAZARDOUS GAS	SLG	SLIDE GATE
GEN	GENERATOR	SHK	SHAKER/VIBRATOR
GT	GRAVITY THICKENER	SAM	SAMPLER
GV	GATE VALVE	SOP	SOFTENING BASINS
HS	HAND SWITCH	SP	SUMP PUMP
LAG	LAGOONS	SRV	SURGE RELIEF VALVE
LC	LIGHTING CONTACTOR	ST	COMBINATION STARTER
LCP	LOCAL CONTROL PANEL	STG	STOP GATE
LP	LIQUID POLYMER CONTROL PANEL	STR	STRAINER
LS	LIMIT SWITCH	SV	SOLENOID VALVE
M	MOTOR	SVR	SERVER
MCC	MOTOR CONTROL CENTER	SWBD	SWITCHBOARD
MCP	MAIN CONTROL PANEL	SWG	SWITCHGEAR
MCV	MOTOR OPERATED CONTROL VALVE	TK	TANK
MIX	BIG BUBBLE MIXING CONTROL PANEL	TV	TELESCOPING VALVE
MP	METERING PUMP	UPS	UNITERRUPTIBLE POWER SUPPLY
MS	MOTOR STARTER	V	VALVE
MXR	MIXER	VAP	VAPORIZER
NET	NETWORK EQUIPMENT RACK	VFD	VARIABLE FREQUENCY DRIVE
		WW	WASH WATER HOLDING
		XF	TRANSFORMER
		SCR	SCREEN
		SAU	SCREEN AUGER
		CON	SOLIDS CONVEYOR

NOTES:

1. THIS LEGEND IS TAKEN FROM A STANDARD PROCESS LEGEND AND NOT ALL ITEMS OR EQUIPMENT AS DESIGNATED HEREON ARE USED ON THIS PROJECT.
2. SOME ABBREVIATIONS MAY NOT BE USED.
3. ETHERNET COMMUNICATION LINES ARE SHOWN FOR REFERENCE ONLY. REFER TO CABLE SCHEDULE FOR ACCURATE DATA CONNECTIONS.

GEORGIA REGISTERED No. PE048949 PROFESSIONAL ENGINEER TRENTON K. HOLLIS

Sealed: June 26th, 2024

BURNS McDONNELL
4004 SUMMIT BLVD. NE, SUITE 1200
ATLANTA, GA 30319
770-587-4776
LICENSEE NO. PEF000100
AUTHORIZATION NO. J550903

date	detailed
MARCH 28, 2023	J. BENTRUP
designed	checked
T. HOLLIS	J. LI

Perry

HOUSTON COUNTY, GEORGIA

EAST PERRY WWTF

P&ID LEGEND, ABBREVIATIONS, AND GENERAL NOTES SHEET 2

project	contract
148538	

drawing **100DI602 –** rev. **0**

sheet of sheets

file 148538_100DI602.DWG

PUMPS

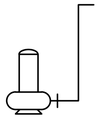

SUBMERSIBLE PUMP

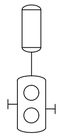

ROTARY LOBE PUMP

CENTRIFUGAL PUMP

VERTICAL TURBINE PUMP

COMPRESSORS & BLOWERS

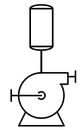

SCREW BLOWER

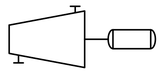

COMPRESSOR

MISCELLANEOUS

AGITATOR/MIXER

SCREEN AUGER

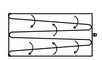

WEIR

SELF-ACTUATED DEVICES

RUPTURE DISC OR SAFETY HEAD FOR PRESSURE RELIEF (EXPLOSION PANEL)

RUPTURE DISC OR SAFETY HEAD FOR VACUUM RELIEF (EXPLOSION PANEL)

PRESSURE RELIEF OR SAFETY VALVE

VACUUM RELIEF VALVE

PRESSURE AND VACUUM RELIEF VALVE OR CONSERVATION VENT

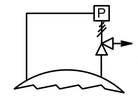

PILOT OPERATED RELIEF VALVE WITH REMOTE SENSOR (USE APPROPRIATE RELIEF VALVE SYMBOL)

PRESSURE REDUCING REGULATOR (SELF-CONTAINED)

BACK PRESSURE REGULATOR (SELF-CONTAINED)

BACK PRESSURE REGULATOR W/ EXTERNAL TAP

PRESSURE REDUCING REGULATOR W/ EXTERNAL TAP

DIFFERENTIAL PRESSURE REDUCING REGULATOR

TEMPERATURE REGULATOR FILLED SYSTEM TYPE

NOTES:

1. THIS LEGEND IS TAKEN FROM A STANDARD PROCESS LEGEND AND NOT ALL ITEMS OR EQUIPMENT AS DESIGNATED HEREON ARE USED ON THIS PROJECT.
2. SOME ABBREVIATIONS MAY NOT BE USED.

GEORGIA REGISTERED No. PE048949 PROFESSIONAL ENGINEER TRENTON K. HOLLIS

Sealed: June 26th, 2024

no.	date	by	ckd	description
0	6/26/24	AF	JJL	ISSUED FOR CONSTRUCTION

BURNS McDONNELL
4004 SUMMIT BLVD. NE, SUITE 1200
ATLANTA, GA 30319
770-587-4776
LICENSEE NO. PEF000100
AUTHORIZATION NO. J550903

date	detailed
MARCH 28, 2023	J. BENTRUP
designed	checked
T. HOLLIS	J. LI

Perry

HOUSTON COUNTY, GEORGIA

EAST PERRY WWTF

P&ID LEGEND, ABBREVIATIONS, AND GENERAL NOTES SHEET 3

project	contract
148538	

drawing **100DI603 –** rev. **0**

sheet of sheets

file 148538_100DI603.DWG

no.	date	by	ckd	description
0	6/26/24	AF	JJL	ISSUED FOR CONSTRUCTION

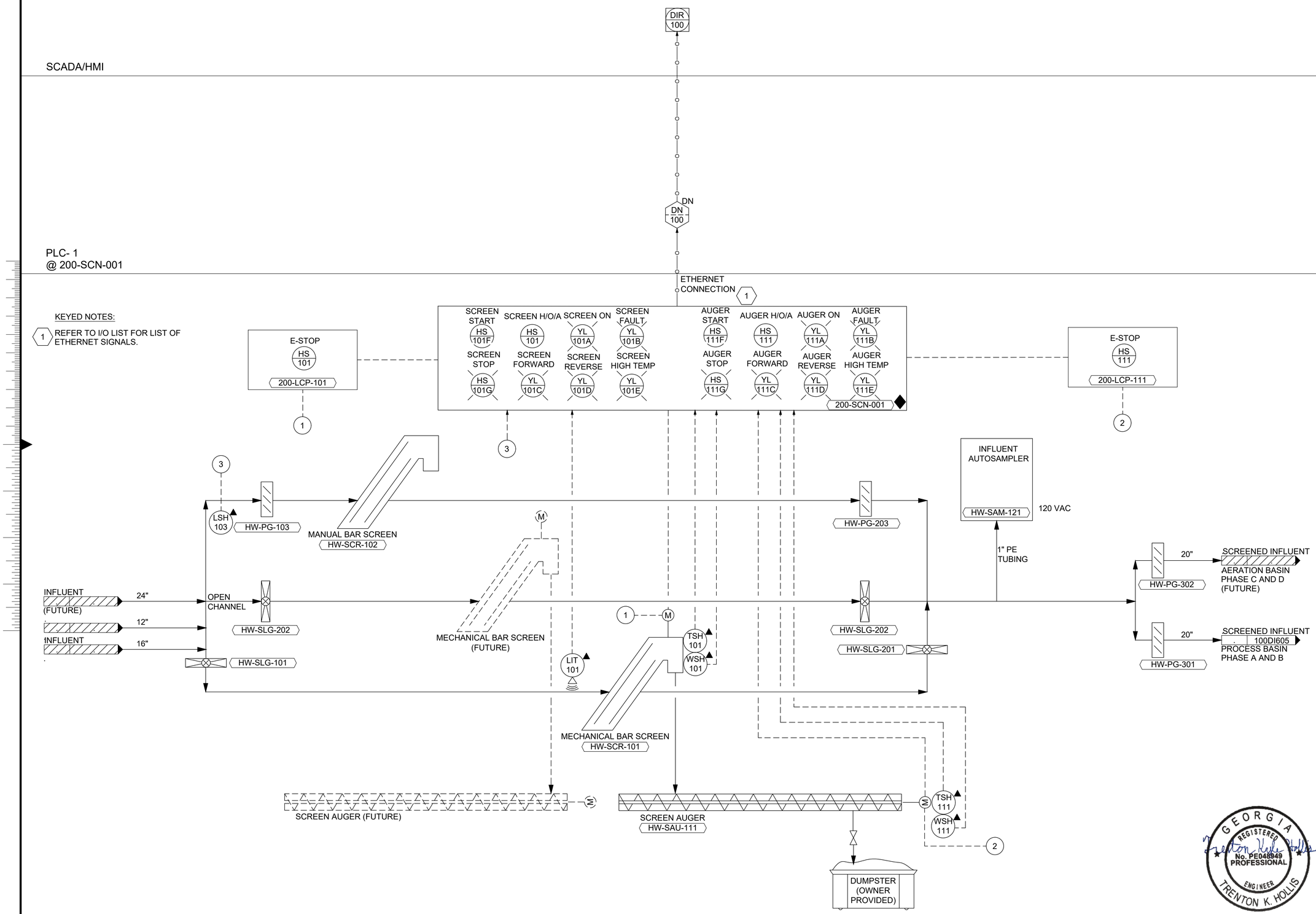

BURNS McDONNELL
4004 SUMMIT BLVD. NE, SUITE 1200
ATLANTA, GA 30319
770-587-4776
LICENSEE NO. PEF000100
AUTHORIZATION NO. J550903

date	detailed
APRIL 5, 2023	J. BENTRUP
designed	checked
T. HOLLIS	J .LI

Perry
HOUSTON COUNTY, GEORGIA

EAST PERRY WWTF
HEADWORKS
P&ID

project	contract
148538	

drawing **100DI604 –** rev. **E**

sheet of sheets

file 148538_100DI604.DWG

GEORGIA REGISTERED No. PE048949 PROFESSIONAL ENGINEER TRENTON K. HOLLIS

Sealed: June 26th, 2024

C:\USERS\BDBROCHUE\APPDATA\LOCAL\AUTODESK\AUTOCAD PLANT 3D\COLLABORATIONCACHE\148538_EASTWWTP_V2022\PID DWG\148538_100DI604.DWG 6/25/2024 10:35 AM BDBROCHUE

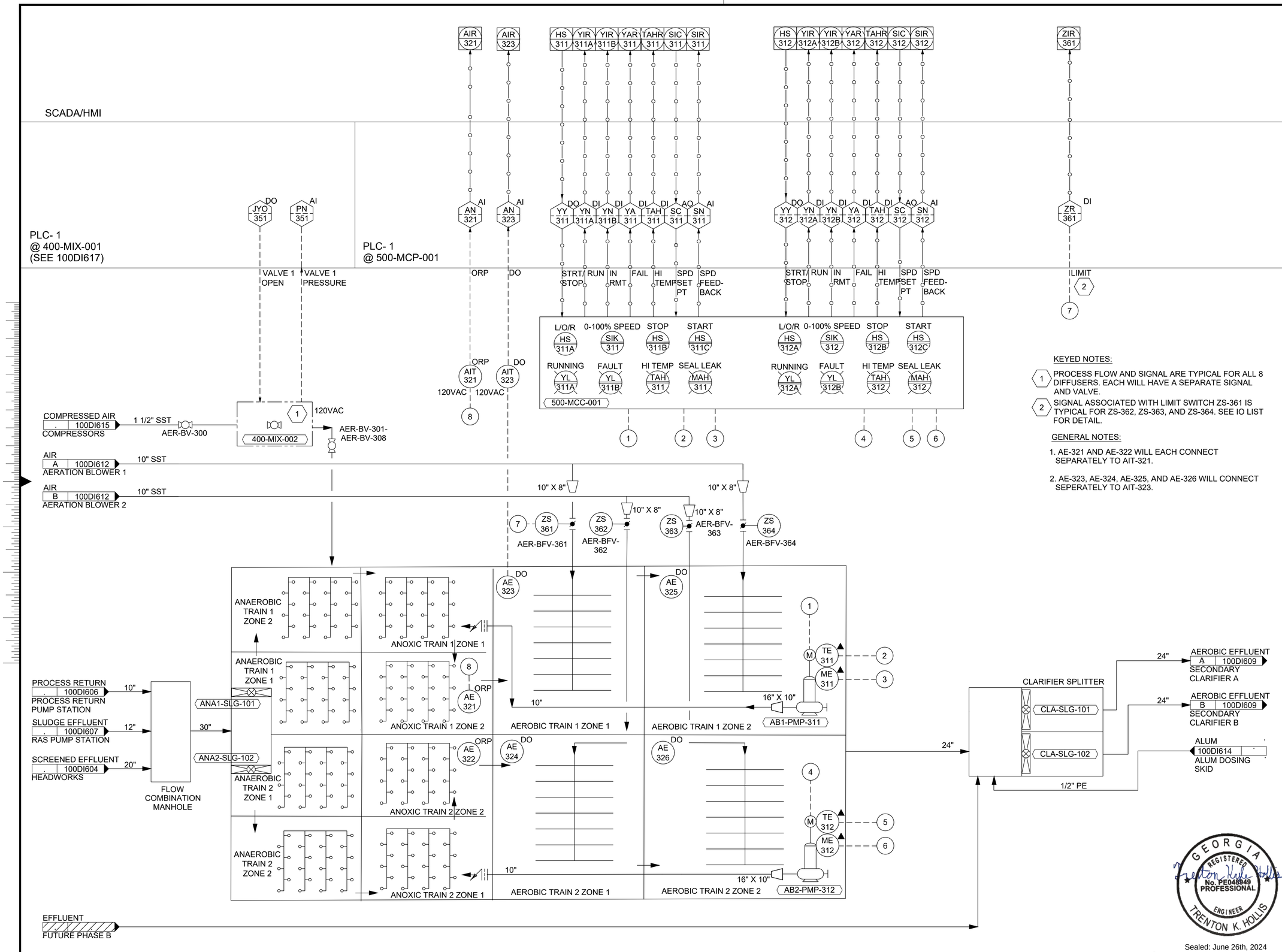

KEYED NOTES:

1. PROCESS FLOW AND SIGNAL ARE TYPICAL FOR ALL 8 DIFFUSERS. EACH WILL HAVE A SEPARATE SIGNAL AND VALVE.
2. SIGNAL ASSOCIATED WITH LIMIT SWITCH ZS-361 IS TYPICAL FOR ZS-362, ZS-363, AND ZS-364. SEE IO LIST FOR DETAIL.

GENERAL NOTES:

1. AE-321 AND AE-322 WILL EACH CONNECT SEPARATELY TO AIT-321.
2. AE-323, AE-324, AE-325, AND AE-326 WILL CONNECT SEPERATELY TO AIT-323.

no.	date	by	ckd	description
0	6/26/24	AF	JJL	ISSUED FOR CONSTRUCTION

BURNS McDONNELL
4004 SUMMIT BLVD. NE, SUITE 1200
ATLANTA, GA 30319
770-587-4776
LICENSEE NO. PEF000100
AUTHORIZATION NO. J550903

date	detailed
APRIL 5, 2023	J. BENTRUP
designed	checked
T. HOLLIS	J. LI

Perry
HOUSTON COUNTY, GEORGIA

EAST PERRY WWTF
PROCESS BASINS
P&ID

project 148538 | contract

drawing **100DI605 –** rev. **0**

sheet of sheets

file 148538_100DI605.DWG

GEORGIA REGISTERED No. PE048849 PROFESSIONAL ENGINEER TRENTON K. HOLLIS

Sealed: June 26th, 2024

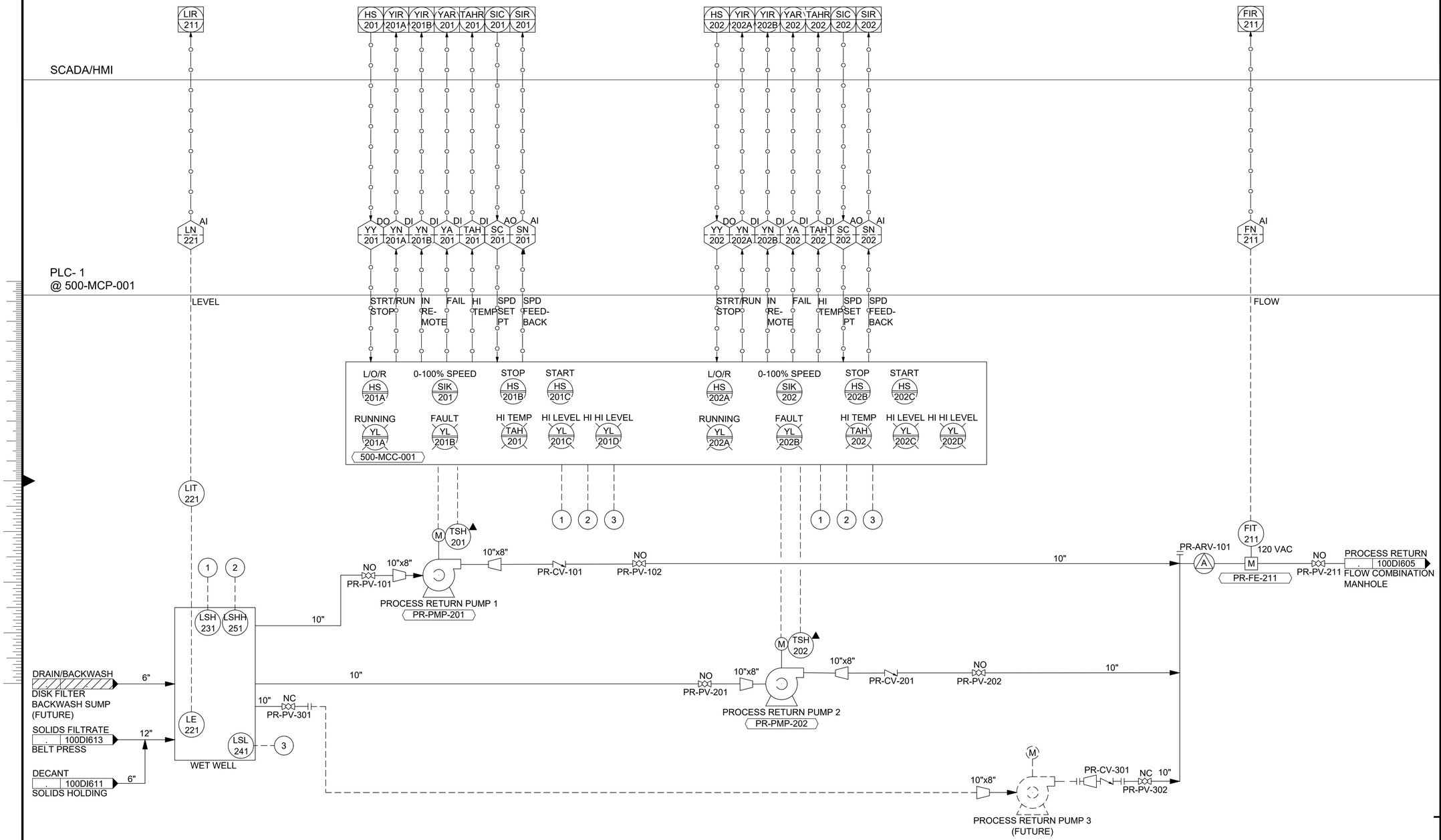

no.	date	by	ckd	description
0	6/26/24	AF	JJL	ISSUED FOR CONSTRUCTION

BURNS McDONNELL
4004 SUMMIT BLVD. NE, SUITE 1200
ATLANTA, GA 30319
770-587-4776
LICENSEE NO. PEF000100
AUTHORIZATION NO. J550903

date	detailed
APRIL 5, 2023	J. BENTRUP
designed	checked
T. HOLLIS	J. LI

Perry
HOUSTON COUNTY, GEORGIA

EAST PERRY WWTF
PROCESS RETURN PUMP STATION
P&ID

project 148538
contract

drawing **100DI606 –**
rev. **0**

sheet of sheets

file 148538_100DI606.DWG

GEORGIA REGISTERED No. PE048849 PROFESSIONAL ENGINEER TRENTON K. HOLLIS

Sealed: June 26th, 2024

Scale For Microfilming: Millimeters / Inches

C:\USERS\BDBROCHUE\APPDATA\LOCAL\AUTODESK\AUTOCAD PLANT 3D\COLLABORATIONCACHE\148538_EASTWWTP_V2022\PID DWG\148538_100DI606.DWG 6/25/2024 10:36 AM BDBROCHUE

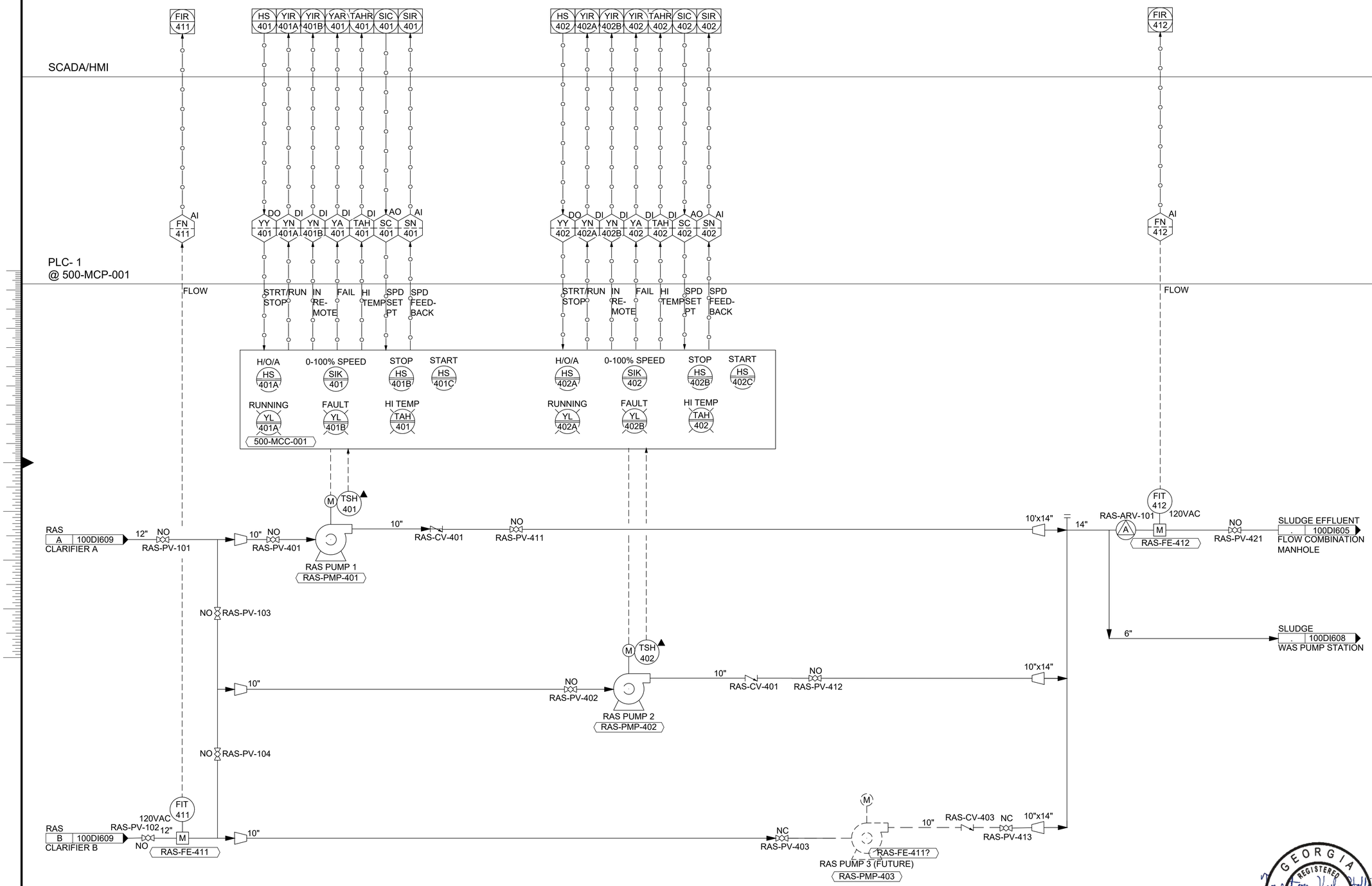

no.	date	by	ckd	description
0	6/26/24	AF	JJL	ISSUED FOR CONSTRUCTION

BURNS McDONNELL
4004 SUMMIT BLVD. NE, SUITE 1200
ATLANTA, GA 30319
770-587-4776
LICENSEE NO. PEF000100
AUTHORIZATION NO. J550903

date	detailed
APRIL 5, 2023	J. BENTRUP
designed	checked
T. HOLLIS	J. LI

Perry
HOUSTON COUNTY, GEORGIA

EAST PERRY WWTF
RAS PUMP STATION
P&ID

project	contract
148538	

drawing **100DI607 –** rev. **0**

sheet of sheets

file 148538_100DI607.DWG

GEORGIA REGISTERED No. PE048949 PROFESSIONAL ENGINEER TRENTON K. HOLLIS

Sealed: June 26th, 6th, 2024

C:\USERS\BDBROCHUE\APPDATA\LOCAL\AUTODESK\AUTOCAD PLANT 3D\COLLABORATIONCACHE\148538_EASTWWTP_V2022\PID DWG\148538_100DI607.DWG 6/25/2024 10:36 AM BDBROCHUE

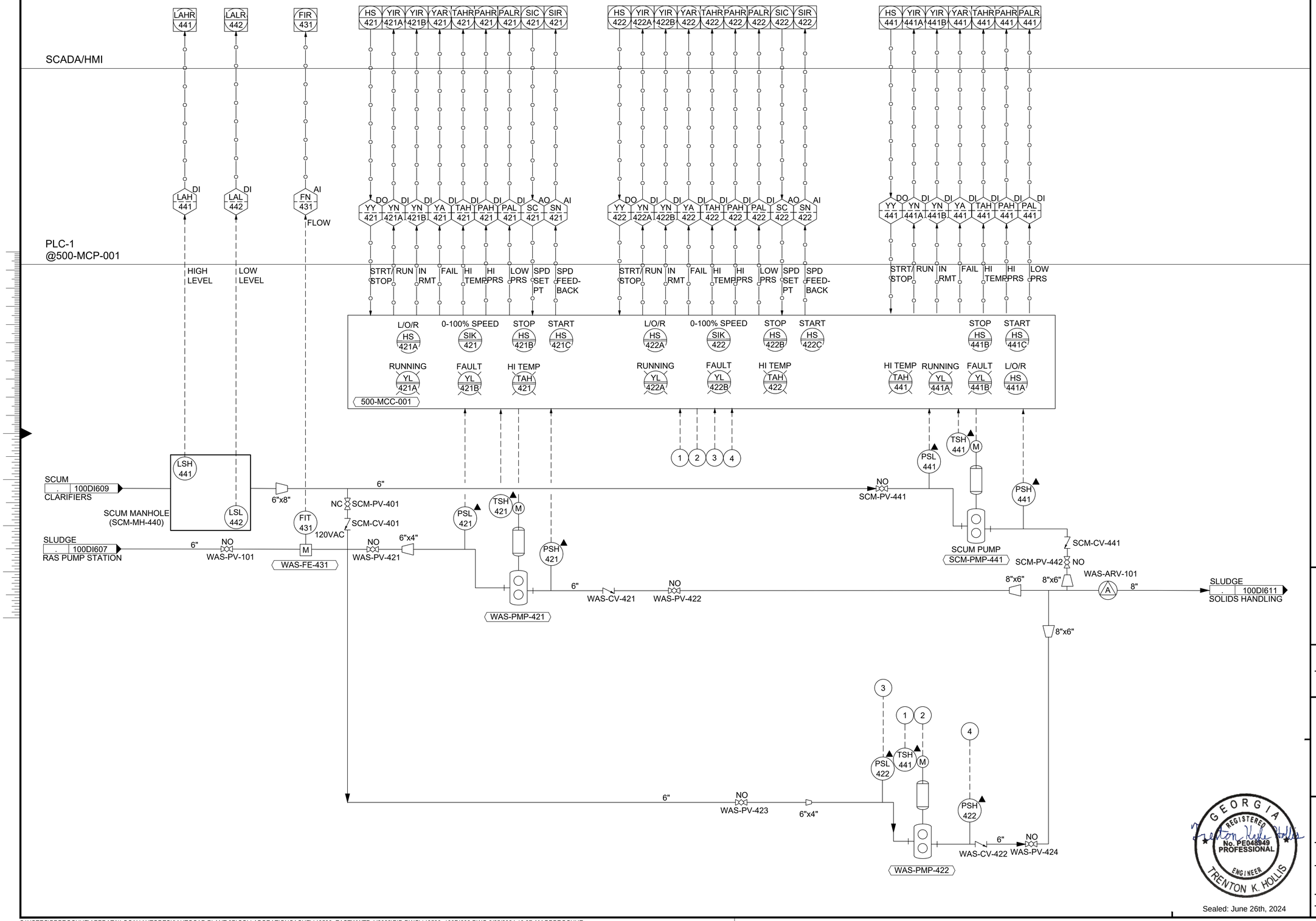

no.	date	by	ckd	description
0	6/26/24	AF	JJL	ISSUED FOR CONSTRUCTION

BURNS McDONNELL
4004 SUMMIT BLVD. NE, SUITE 1200
ATLANTA, GA 30319
770-587-4776
LICENSEE NO. PEF000100
AUTHORIZATION NO. J550903

date	detailed
APRIL 5, 2023	J. BENTRUP
designed	checked
T. HOLLIS	J. LI

Perry
HOUSTON COUNTY, GEORGIA

EAST PERRY WWTF
WAS PUMP STATION
P&ID

project	contract
148538	

drawing **100DI608 –** rev. **0**

sheet of sheets

file 148538_100DI608.DWG

GEORGIA REGISTERED No. PE048949 PROFESSIONAL ENGINEER TRENTON K. HOLLIS

Sealed: June 26th, 2024

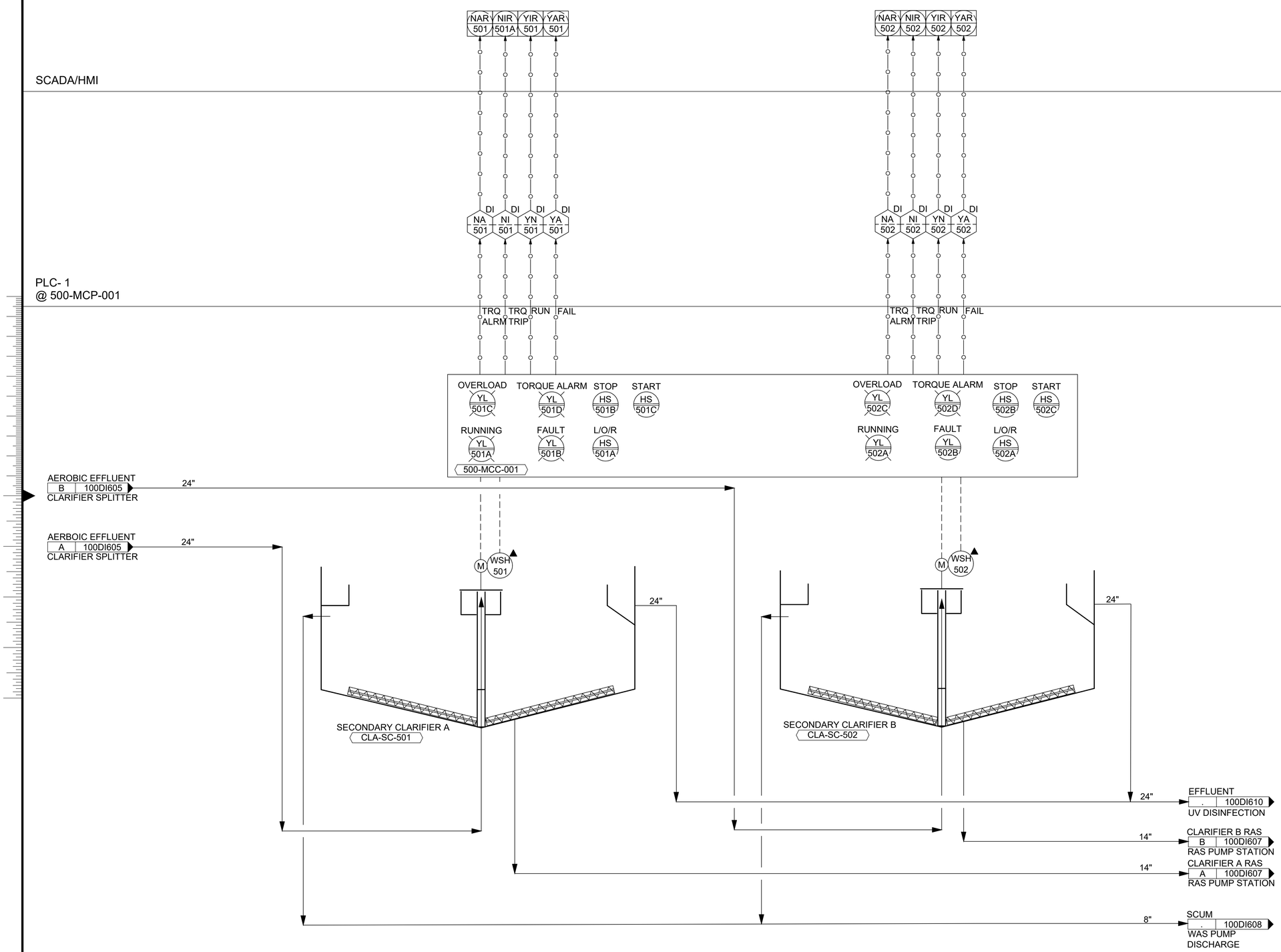

no.	date	by	ckd	description
0	6/26/24	AF	JJL	ISSUED FOR CONSTRUCTION

GEORGIA REGISTERED No. PE048949 PROFESSIONAL ENGINEER TRENTON K. HOLLIS

Sealed: June 26th, 2024

BURNS McDONNELL
4004 SUMMIT BLVD. NE, SUITE 1200
ATLANTA, GA 30319
770-587-4776
LICENSEE NO. PEF000100
AUTHORIZATION NO. J550903

date	detailed
APRIL 5, 2023	J. BENTRUP
designed	checked
T. HOLLIS	J. LI

Perry

HOUSTON COUNTY, GEORGIA

EAST PERRY WWTF

CLARIFIER
P&ID

project 148538 | contract

drawing **100DI609 –** rev. **0**

sheet of sheets

file 148538_100DI609.DWG

no.	date	by	ckd	description
0	6/26/24	AF	JJL	ISSUED FOR CONSTRUCTION

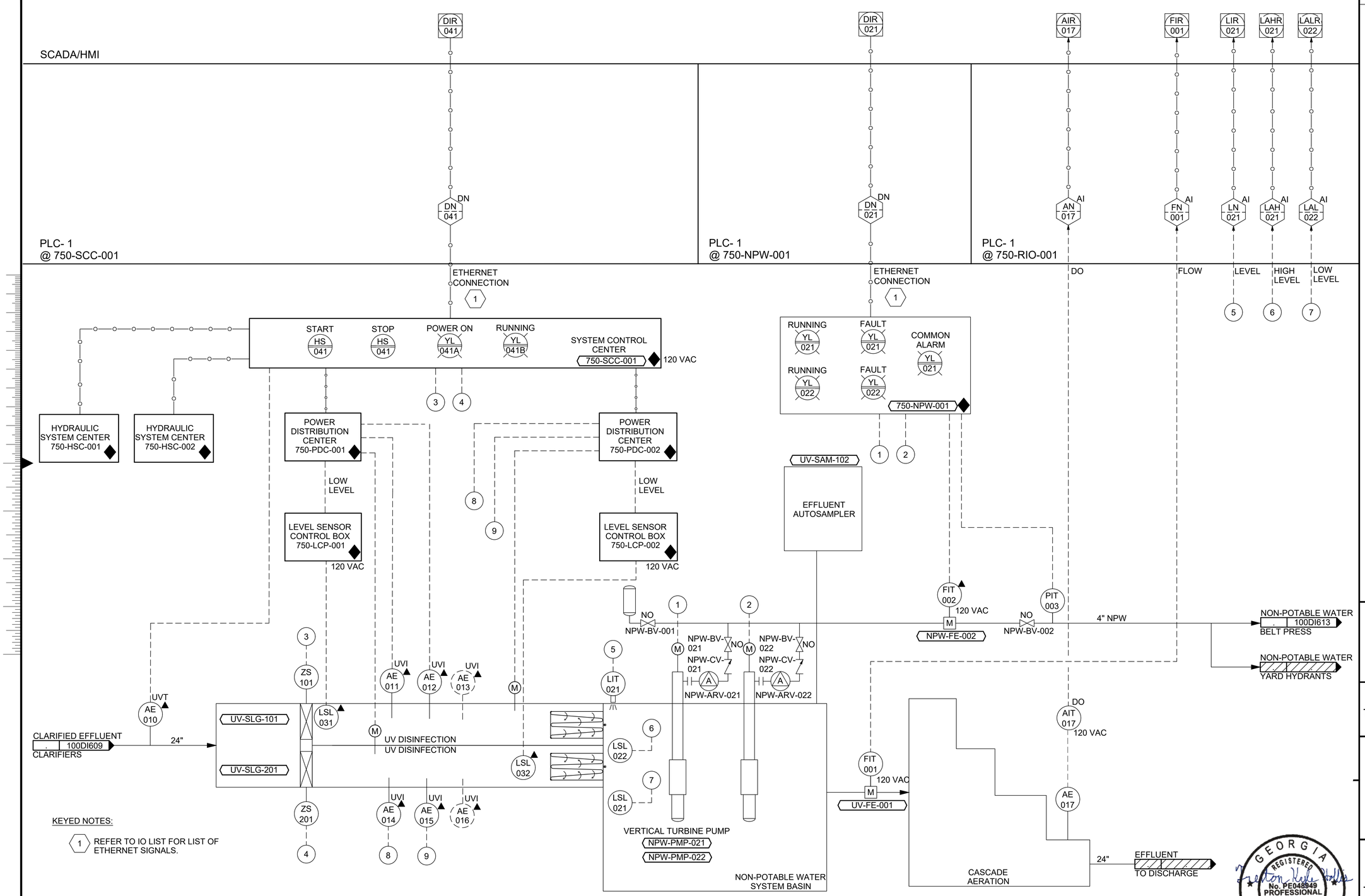

Sealed: June 26th, 2024

BURNS McDONNELL
4004 SUMMIT BLVD. NE, SUITE 1200
ATLANTA, GA 30319
770-587-4776
LICENSEE NO. PEF000100
AUTHORIZATION NO. J550903

date	detailed
APRIL 5, 2023	J. BENTRUP
designed	checked
T. HOLLIS	J. LI

Perry
HOUSTON COUNTY, GEORGIA

EAST PERRY WWTF
UV DISINFECTION
P&ID

project 148538
contract

drawing **100DI610 –**
rev. **0**

sheet of sheets

file 148538_100DI610.DWG

C:\USERS\BDBROCHUE\APPDATA\LOCAL\AUTODESK\AUTOCAD PLANT 3D\COLLABORATIONCACHE\148538_EASTWWTP_V2022\PID DWG\148538_100DI610.DWG 6/25/2024 10:38 AM BDBROCHUE

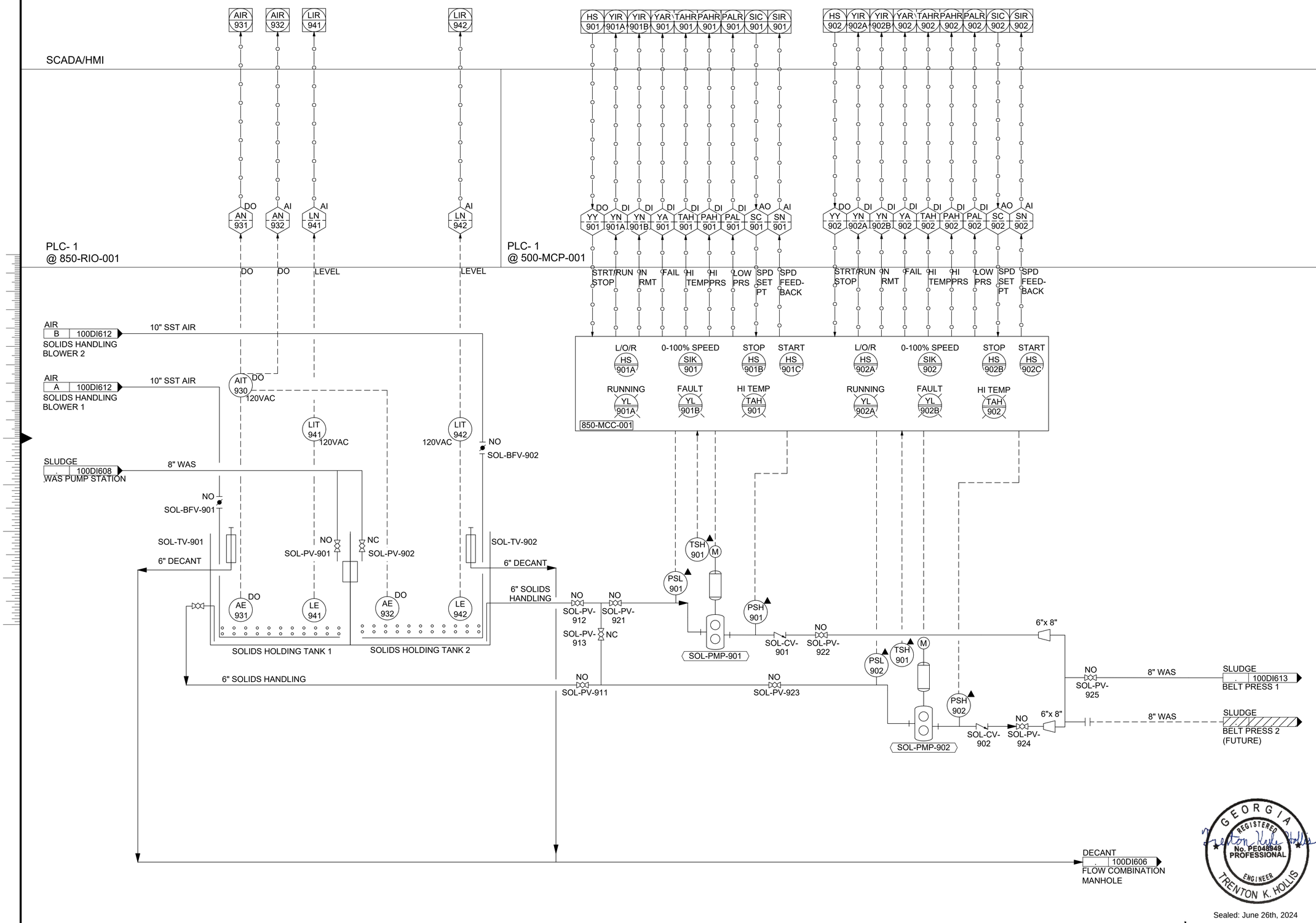

no.	date	by	ckd	description
0	6/26/24	AF	JJL	ISSUED FOR CONSTRUCTION

BURNS McDONNELL
4004 SUMMIT BLVD. NE, SUITE 1200
ATLANTA, GA 30319
770-587-4776
LICENSEE NO. PEF000100
AUTHORIZATION NO. J550903

date	detailed
APRIL 5, 2023	J. BENTRUP
designed	checked
T. HOLLIS	J.LI

Perry
HOUSTON COUNTY, GEORGIA

EAST PERRY WWTF
SOLIDS HANDLING SYSTEM
P&ID

project 148538
contract

drawing **100DI611 –**
rev. **0**

sheet of sheets

file 148538_100DI611.DWG

C:\USERS\BDBROCHUE\APPDATA\LOCAL\AUTODESK\AUTOCAD PLANT 3D\COLLABORATIONCACHE\148538_EASTWWTP_V2022\PID DWG\148538_100DI611.DWG 6/25/2024 10:38 AM BDBROCHUE

no.	date	by	ckd	description
0	6/26/24	AF	JJL	ISSUED FOR CONSTRUCTION

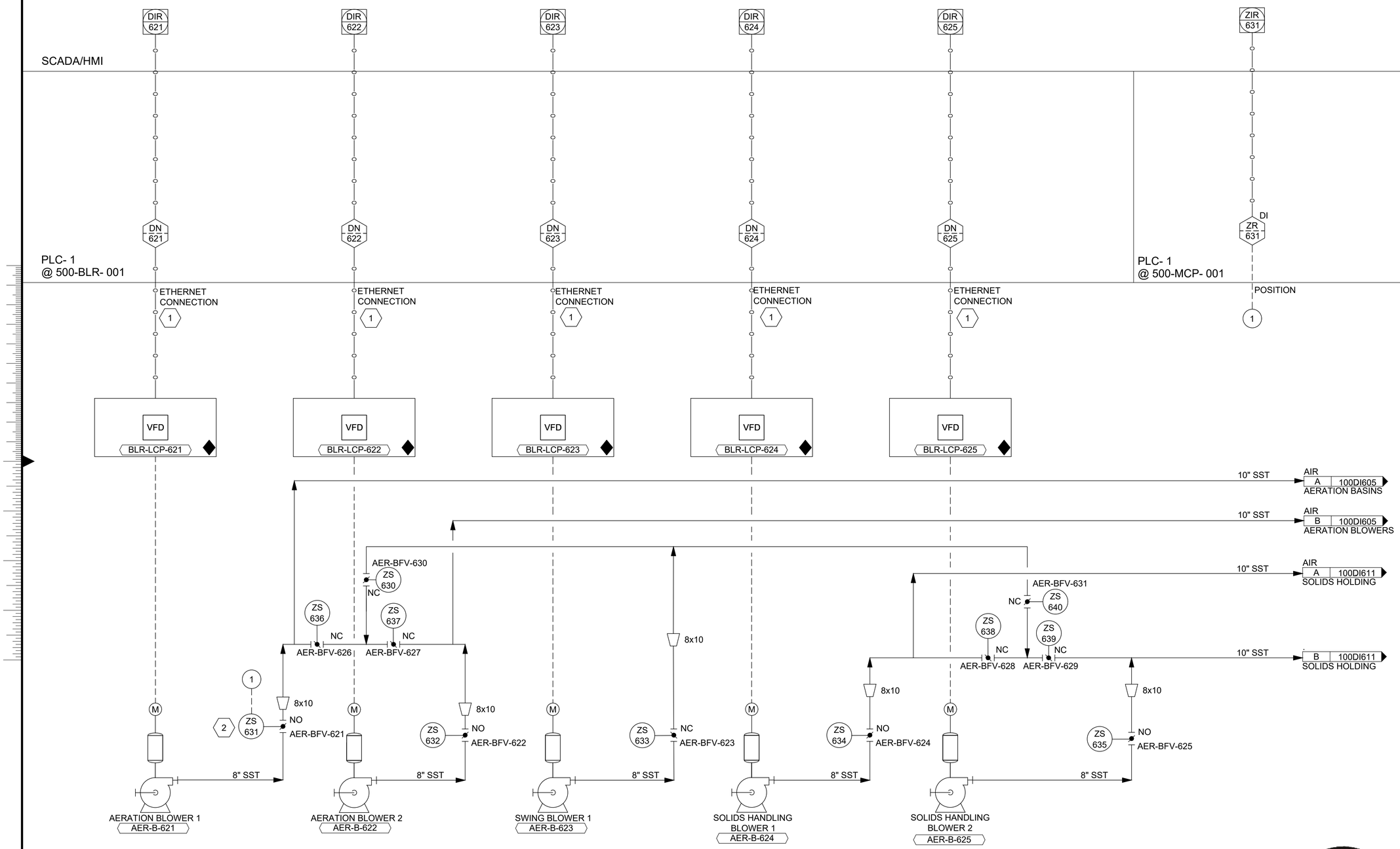

KEYED NOTES:

1. REFER TO IO LIST FOR LIST OF ETHERNET SIGNALS.
2. SIGNAL FOR ZS-631 IS TYPICAL FOR ALL POSITION SWITCHES ON THIS PAGE. SEE IO LIST FOR DETAIL.

GEORGIA REGISTERED No. PE048949 PROFESSIONAL ENGINEER TRENTON K. HOLLIS

Sealed: June 26th, 2024

BURNS McDONNELL
4004 SUMMIT BLVD. NE, SUITE 1200
ATLANTA, GA 30319
770-587-4776
LICENSEE NO. PEF000100
AUTHORIZATION NO. J550903

date: APRIL 5, 2023	detailed: J. BENTRUP
designed: T. HOLLIS	checked: J. LI

Perry

HOUSTON COUNTY, GEORGIA

EAST PERRY WWTF
AERATION BLOWERS
P&ID

project: 148538
contract:
drawing: **100DI612 –**
rev.: **0**
sheet of sheets
file 148538_100DI612.DWG

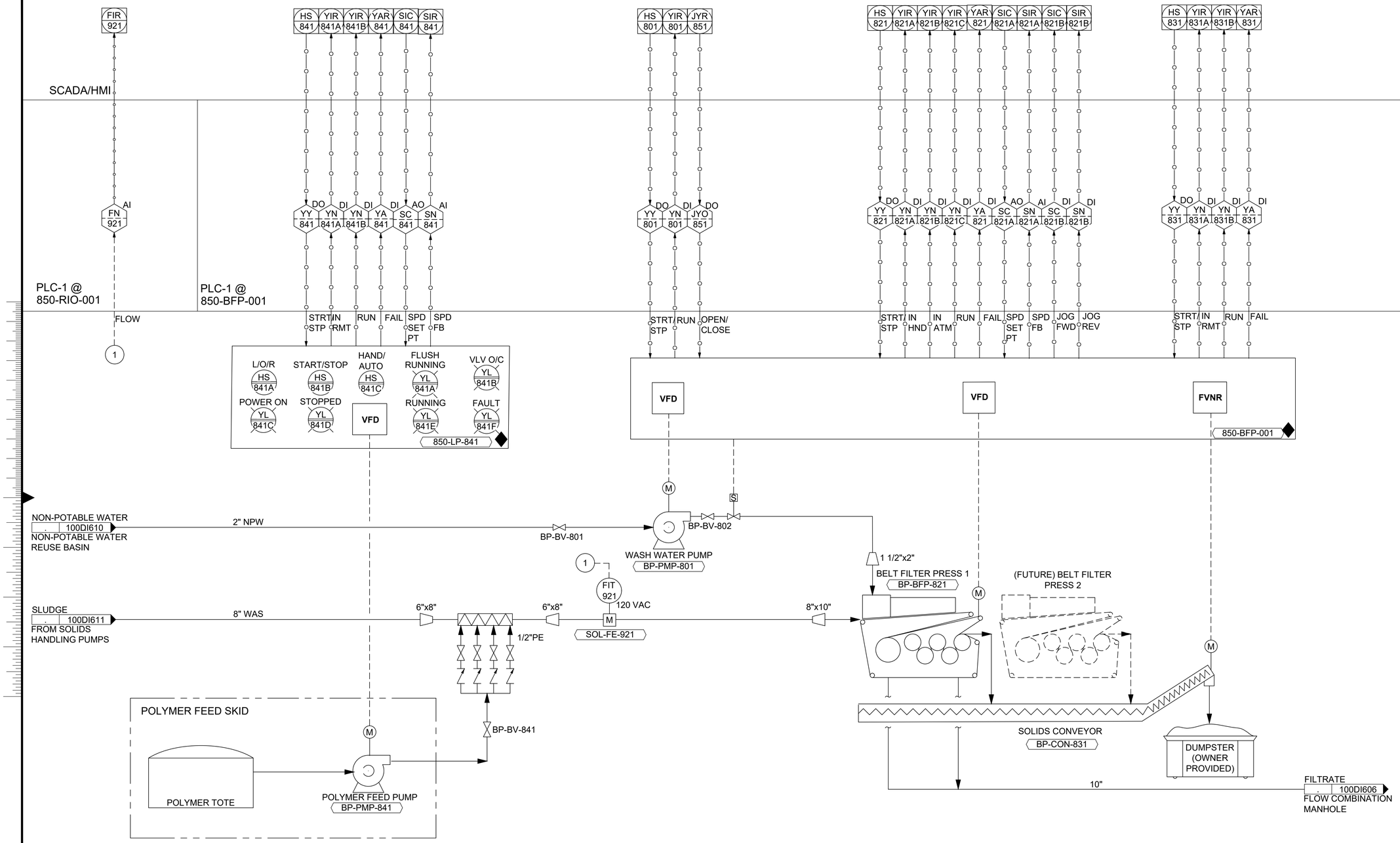

GENERAL NOTES

1. ANOTHER BELT PRESS SYSTEM WILL BE INSTALLED IN THE FUTURE. THE PROCESS WILL BE IDENTICAL TO THE DIAGRAM SHOWN ON THIS PAGE, INCLUDING THE SPRAY WATER PUMP AND POLYMER FEED SKID.
2. REFER TO "46 76 21 BELT FILTER PRESS EQUIPMENT" FOR 850-BFP-001 "BELT FILTER PRESS CONTROL PANEL" SWITCHES AND INDICATION DEVICES.

GEORGIA REGISTERED No. PE048849 PROFESSIONAL ENGINEER TRENTON K. HOLLIS

Sealed: June 26th, 2024

no.	date	by	ckd	description
0	6/26/24	AF	JJL	ISSUED FOR CONSTRUCTION

BURNS McDONNELL
4004 SUMMIT BLVD. NE, SUITE 1200
ATLANTA, GA 30319
770-587-4776
LICENSEE NO. PEF000100
AUTHORIZATION NO. J550903

date	detailed
APRIL 5, 2023	J. BENTRUP
designed	checked
T. HOLLIS	J. LI

Perry

HOUSTON COUNTY, GEORGIA

EAST PERRY WWTF

BELT FILTER PRESS P&ID

project	contract
148538	

drawing **100DI613 –** rev. **0**

sheet of sheets

file 148538_100DI613.DWG

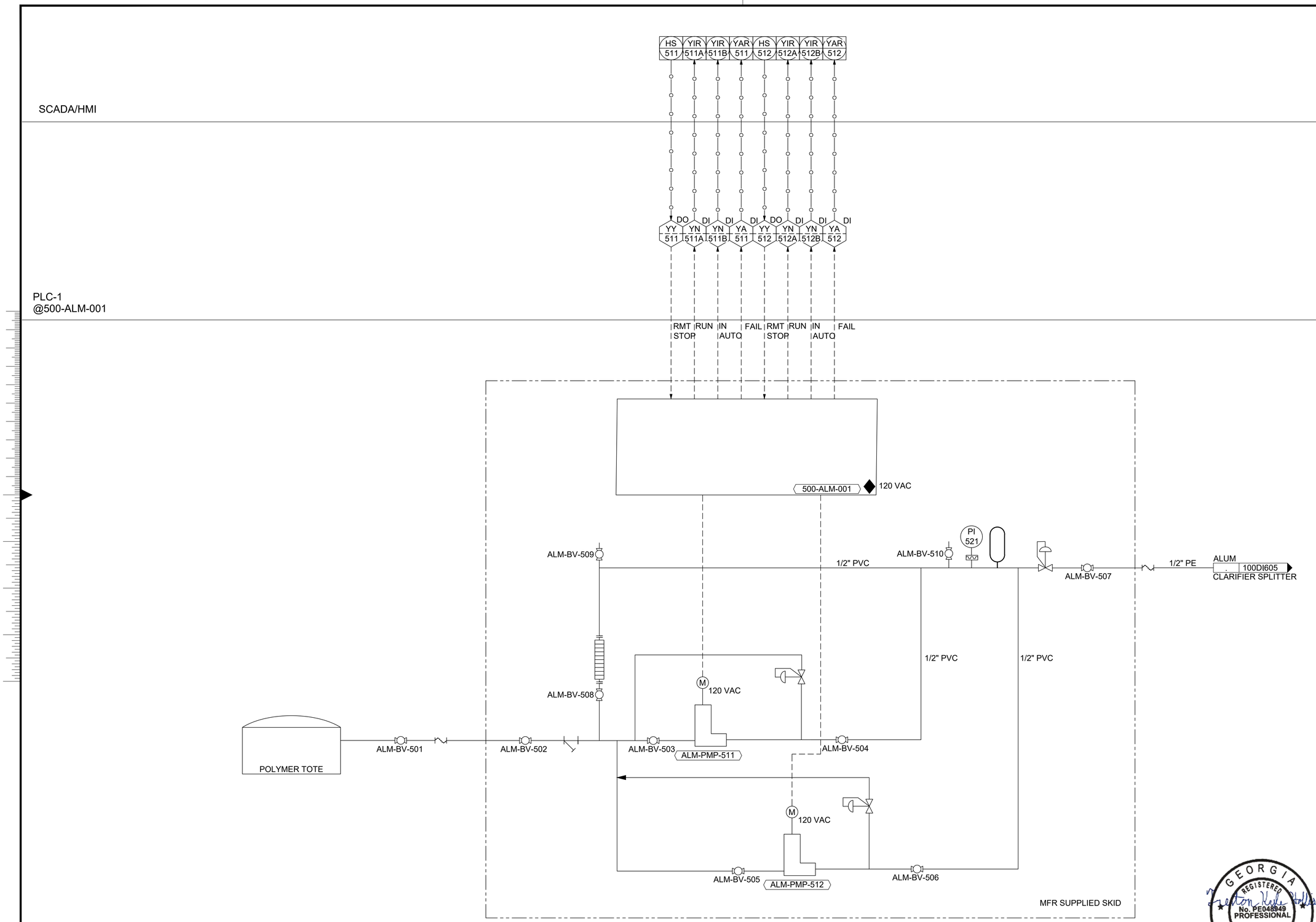

no.	date	by	ckd	description
0	6/26/24	AF	JJL	ISSUED FOR CONSTRUCTION

BURNS McDONNELL
4004 SUMMIT BLVD. NE, SUITE 1200
ATLANTA, GA 30319
770-587-4776
LICENSEE NO. PEF000100
AUTHORIZATION NO. J550903

date	detailed
OCTOBER 10, 2023	S. GILLAM
designed	checked
T. HOLLIS	J. LI

Perry

HOUSTON COUNTY, GEORGIA

EAST PERRY WWTF
ALUM DOSING SYSTEM
P&ID

project	contract
148538	

drawing **100DI614 –** rev. **0**

sheet of sheets

file 148538_100DI614.DWG

GEORGIA REGISTERED No. PE048949 PROFESSIONAL ENGINEER TRENTON K. HOLLIS

Sealed: June 26th, 2024

C:\USERS\BDBROCHUE\APPDATA\LOCAL\AUTODESK\AUTOCAD PLANT 3D\COLLABORATIONCACHE\148538_EASTWWTP_V2022\PID DWG\148538_100DI614.DWG 6/25/2024 10:40 AM BDBROCHUE

no.	date	by	ckd	description
0	6/26/24	AF	JJL	ISSUED FOR CONSTRUCTION

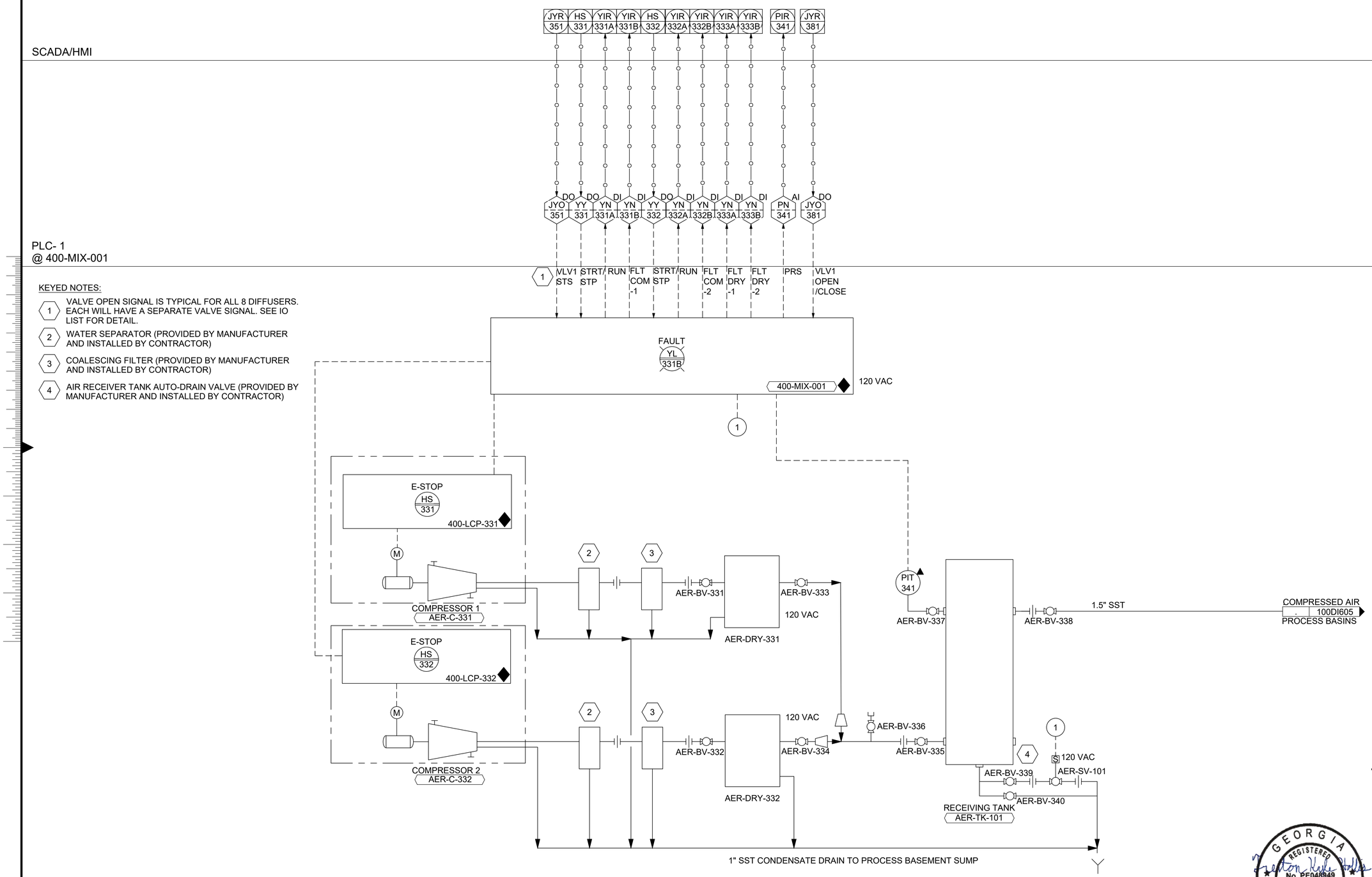

KEYED NOTES:

1. VALVE OPEN SIGNAL IS TYPICAL FOR ALL 8 DIFFUSERS. EACH WILL HAVE A SEPARATE VALVE SIGNAL. SEE IO LIST FOR DETAIL.
2. WATER SEPARATOR (PROVIDED BY MANUFACTURER AND INSTALLED BY CONTRACTOR)
3. COALESCING FILTER (PROVIDED BY MANUFACTURER AND INSTALLED BY CONTRACTOR)
4. AIR RECEIVER TANK AUTO-DRAIN VALVE (PROVIDED BY MANUFACTURER AND INSTALLED BY CONTRACTOR)

GEORGIA REGISTERED No. PE048949 PROFESSIONAL ENGINEER TRENTON K. HOLLIS

Sealed: June 26th, 2024

BURNS McDONNELL
4004 SUMMIT BLVD. NE, SUITE 1200
ATLANTA, GA 30319
770-587-4776
LICENSEE NO. PEF000100
AUTHORIZATION NO. J550903

date	detailed
NOVEMBER 11, 2023	B.BROCHUE
designed	checked
S. GILLIAM	J. LI

Perry

HOUSTON COUNTY, GEORGIA

EAST PERRY WWTF

MIXING SYSTEM COMPRESSORS P&ID

project 148538 | contract

drawing **100DI615 –** rev. **0**

sheet of sheets

file 148538_100DI615.DWG

ONE-LINE AND CONTROL DIAGRAMS

LINES AND TERMINALS

- POWER CIRCUIT AND EQUIPMENT INSTALLED BY THIS CONTRACT
- EXISTING CIRCUIT AND EQUIPMENT
- FUTURE POWER CIRCUIT AND EQUIPMENT
- EQUIPMENT ENCLOSURE
- CONTROL OR INTERLOCK CIRCUIT
- REMOTE WIRING
- TERMINALS
- + (A) - (B) — (A) POSITIVE TERMINAL (B) NEGATIVE TERMINAL
- A B — (A) CONDUCTOR CONNECTION (B) NO CONNECTION

PROTECTION/DISCONNECTS

- XX — PROTECTION DEVICE (ANSI C37.2 DEVICE NUMBER AS INDICATED)
- CIRCUIT BREAKER
- FUSE
- FUSED DISCONNECT SWITCH
- DISCONNECT SWITCH
- POLE MOUNTED FUSED DISCONNECT SWITCH
- PLUG-IN OR DRAWOUT CONNECTION
- CAPACITOR
- THERMAL OVERLOADS
- O.L. (3) — THERMAL OVERLOAD RELAY (SHOWN WITH QUANTITY)
- ARMS — ARC FLASH REDUCTION MAINTENANCE SWITCH
- TU — ELECTRONIC TRIP UNIT
- LSIG — LONG TIME, SHORT TIME, INSTANTANEOUS, AND GROUND TRIP SETTINGS

STARTERS

- SINGLE SPEED NON-REVERSING MANUAL MOTOR STARTER
- SINGLE SPEED NON-REVERSING MAGNETIC MOTOR STARTER
- SINGLE SPEED REVERSING MAGNETIC MOTOR STARTER
- TWO SPEED NON-REVERSING MAGNETIC MOTOR STARTER
- RVSS — REDUCED VOLTAGE SOLID-STATE STARTER
- RVAT — REDUCED VOLTAGE AUTOTRANSFORMER STARTER
- VFD — VARIABLE FREQUENCY DRIVE

TRANSFORMERS

- POWER TRANSFORMER (XFMR)
- (2) — POTENTIAL TRANSFORMER (SHOWN WITH QUANTITY)
- 200:5 (2) — CURRENT TRANSFORMER, SINGLE RATIO (SHOWN WITH QUANTITY)
- CONTROL POWER TRANSFORMER (ONE-LINE DIAGRAMS)
- CONTROL POWER TRANSFORMER (CONTROL SCHEMATIC DIAGRAMS)

LOADS/SOURCES

- GENERATOR
- X — ELECTRIC MOTOR - APPROX. HORSEPOWER AS INDICATED
- EQUIPMENT AS NOTED ON DIAGRAM

METERING/NETWORKING

- A — AMMETER
- V — VOLTMETER
- PQM — POWER QUALITY METER
- NSW — NETWORK SWITCH
- PSU — POWER SUPPLY UNIT

MISC ONE-LINE SYMBOLS

- (X) — "X" INDICATES NUMBER OF DEVICES WHEN MORE THAN ONE
- DELTA WINDING CONNECTION
- GROUNDING WYE WINDING CONNECTION
- GROUNDING CONNECTION
- LIGHTNING ARRESTOR

CONTROL DEVICES

- A B — (A) LEVEL SWITCH - CLOSES WITH RISING LEVEL (B) LEVEL SWITCH - OPENS WITH RISING LEVEL
- A B — (A) FLOW SWITCH - CLOSES WITH INCREASING FLOW (B) FLOW SWITCH - OPENS WITH INCREASING FLOW
- A B — (A) MAINTAINED PUSH-BUTTON - N.O. (B) MAINTAINED PUSH-BUTTON - N.C.
- A B — (A) LIMIT SWITCH - N.C. (B) LIMIT SWITCH - N.C. HELD OPEN
- A B — (A) LIMIT SWITCH - N.O. (B) LIMIT SWITCH - N.O. HELD CLOSED
- A B — (A) PRESSURE SWITCH - CLOSES WITH INCREASING PRESSURE (B) PRESSURE SWITCH - OPENS WITH INCREASING PRESSURE
- A B — (A) MOMENTARY PUSH-BUTTON - N.O. (B) MOMENTARY PUSH-BUTTON - N.C.
- A B — (A) TEMP. SWITCH - CLOSES WITH RISING TEMP. (B) TEMP. SWITCH - OPENS WITH RISING TEMP.
- A B — (A) N.O. TIME DELAY CONTACT (B) N.C. TIME DELAY CONTACT
- X O / X — XO — TWO POSITION SELECTOR SWITCH
- X O / X O / X — XOO — THREE POSITION SELECTOR SWITCH
- X O / X O / X O / X — XOOO — FOUR POSITION SELECTOR SWITCH
- SOLENOID VALVE
- PHOTOCELL
- X — INDICATING LIGHT, COLOR AS INDICATED
- X — PUSH-TO-TEST INDICATING LIGHT, COLOR AS INDICATED

PLANS

LINES

- NEW CONSTRUCTION
- EXISTING CONSTRUCTION
- CONDUIT EXPOSED
- CONDUIT CONCEALED IN WALL, CEILING OR HIDDEN FROM VIEW
- CONDUIT CONCEALED IN FLOOR OR UNDERGROUND
- HOMERUN TO PANEL
- FLEXIBLE CONDUIT
- FO — FIBER-OPTIC CABLE
- E — UNDGERGROUND ELECTRICAL
- OHE — OVERHEAD ELECTRICAL
- CONDUIT TURNING UP
- CONDUIT TURNING DOWN
- CONDUIT TERMINATED AND CAPPED
- CONDUIT WITH BUSHING
- CONDUIT PASSING THRU ELEVATION

GROUNDING/LIGHTNING PROTECTION

- GROUND CABLE
- BOLTED CONNECTION
- WELDED CONNECTION
- BI-METALIC CONNECTION
- GROUND ROD
- GROUND TEST WELL
- AIR TERMINAL
- GROUND BUS BAR

EQUIPMENT

- NEW EQUIPMENT
- EXISTING EQUIPMENT
- FUTURE EQUIPMENT
- LIGHTING PANEL
- POWER PANEL
- DISCONNECT SWITCH
- FUSED DISCONNECT SWITCH
- COMBINATION DISCONNECT/ MAGNETIC MOTOR STARTER
- REDUCED VOLTAGE COMBINATION DISCONNECT/MAG MOTOR STARTER
- M — MOTOR
- E — MISC. ELECTRICAL LOAD
- J — JUNCTION BOX
- P — PULL BOX

LIGHTING

- RECTANGULAR LUMINAIRE
- RECTANGULAR LUMINAIRE WITH EMERGENCY BACK-UP
- CIRCULAR LUMINAIRE
- CIRCULAR LUMINAIRE WITH EMERGENCY BACK-UP
- EMERGENCY WALL PACK UNIT
- CEILING MOUNTED EXIT SIGN
- WALL MOUNTED EXIT SIGN
- POLE-MOUNTED AREA LIGHT
- S — SINGLE POLE SWITCH
- S_3 — THREE-WAY SWITCH
- S_4 — FOUR-WAY SWITCH
- S_{WP} — WEATHERPROOF SWITCH
- S_D — DIMMER SWITCH
- S_{EXP} — EXPLOSIONPROOF SWITCH
- OS — CEILING MOUNTED OCCUPANCY SENSOR
- OS — WALL MOUNTED OCCUPANCY SENSOR
- PC — CEILING/ROOF MOUNTED PHOTOCELL
- PC — WALL MOUNTED PHOTOCELL

RECEPTACLES

- 208/240V RECEPTACLE
- 480V RECEPTACLE
- SURFACE, SIMPLEX RECEPTACLE
- SURFACE, SIMPLEX, GFI RECEPTACLE
- FLUSH, SIMPLEX RECEPTACLE
- FLUSH, SIMPLEX, GFI RECEPTACLE
- SURFACE, DUPLEX RECEPTACLE
- SURFACE, DUPLEX, GFI RECEPTACLE
- FLUSH, DUPLEX RECEPTACLE
- FLUSH, DUPLEX, GFI RECEPTACLE
- SURFACE, QUADPLEX RECEPTACLE
- SURFACE, QUADPLEX, GFI RECEPTACLE
- FLUSH, QUADPLEX RECEPTACLE
- FLUSH, QUADPLEX, GFI RECEPTACLE

DATA JACKS

- RECESSED DATA JACK
- RECESSED MIXED DATA JACK
- RECESSED TELEPHONE JACK
- SURFACE DATA JACK
- SURFACE MIXED DATA JACK
- SURFACE TELEPHONE JACK

INSTRUMENTS

- ACTUATED VALVE
- CONTROL STATION
- INSTRUMENT
- H — HORN
- X — STROBE LIGHT, COLOR AS INDICATED
- H — STROBE LIGHT AND HORN COMBINATION

TAG DESIGNATION SCHEMES

LUMINAIRE TAG SCHEME

LXX	LUMINAIRE TYPE
XXX-PNL-XXX-XX	CIRCUIT
SXXX	SWITCHING DEVICE(S)
XX'-XX" AFF	ELEVATION TO BOTTOM OF FIXTURE

RECEPTACLE TAG SCHEME

XXX-PNL-XXX	POWER SOURCE TAG
XX	CIRCUIT NUMBER
XXX	MODIFIER (IF APPLICABLE)

INSTRUMENT TAG SCHEME

EQUIPMENT/INSTRUMENT IDENTIFIER	
FACILITY AREA OR SYSTEM	
LOOP NUMBER	

XXX-XXX / XXX

NOTES	NOTES
XX'-XX" AFF	INSTRUMENT ELEVATION
XXX-PLC-XXX	ASSOCIATED CONTROL PANEL

CABLE TRAY TAG SCHEME

XXX-CT-XXX	CABLE TRAY TAG
XX" x XX"	HEIGHT x WIDTH
XX'-XX" AFF	ELEVATION TO BOTTOM OF TRAY

ABBREVIATIONS

A	AMPERES	INDUST	INSUSTRIAL
AFG	ABOVE FINISHED GRADE	LC	LIGHTING CONTACTOR
AFF	ABOVE FINISHED FLOOR	GND	GROUND
AIC	AMPS INTERRUPTING CURRENT	MCC	MOTOR CONTROL CENTER
AWG	AMERICAN WIRE GAUGE	MUN	MUNICIPAL
BC	BARE COPPER WIRE	N.O.	NORMALLY OPEN
BF	BELOW FLOOR	N.C.	NORMALLY CLOSED
BG	BELOW GRADE	P	POLE
BKR	BREAKER	PP	POWER PANEL
C	CONDUIT	PLC	PROGAMMABLE LOGIC CONTROLLER
CHL	CHLORINE		
COND	CONDUCTIVITY	REC	RECEPTACLE
CP	CONTROL PANEL	RW	RAW WATER
CPT	CONTROL POWER TRANSFORMER	SP	SPARE
EL	ELEVATION	SPD	SURGE PROTECTIVE DEVICE
EO	ELECTRICALLY OPERATED	SW	SWITCH
EX	EXPOSED	TYP.	TYPICAL
EXP	EXPLOSION-PROOF (CLASS 1, DIV 1, GROUP D)	UE	UNDERGROUND ELECTRICAL
		VFD	VARIABLE FREQUENCY DRIVE
EXT	EXTERIOR	WP	WEATHERPROOF
FACP	FIRE ALARM CONTROL PANEL	XFMR	TRANSFORMER

GENERAL NOTES:

1. ALL CABLE BETWEEN VFD AND MOTOR SHALL BE TYPE SEV5.
2. ALL MULTICONDUCTOR POWER CABLE SHALL BE TYPE SEV 1.
3. ALL MULTICONDUCTOR CONTROL CABLE SHALL BE TYPE CEV1.
4. ALL SINGLE CONDUCTOR POWER/CONTROL CABLES SHALL BE TYPE SE2.
5. ALL INSTRUMENTATION CABLE SHALL BE IEV1.
6. ALL GROUND CABLE SHALL BE TYPE BC2.
7. THIS IS A STANDARD ELECTRICAL LEGEND AND NOT ALL DEVICES AND DEVICE DESIGNATIONS ARE USED ON THIS PROJECT.

GEORGIA REGISTERED No. PE051936 PROFESSIONAL ENGINEER AKRAM FARIDI

06/26/2024

no.	date	by	ckd	description
0	6/24/26	AF	BEG	ISSUED FOR CONSTRUCTION

BURNS McDONNELL
4004 SUMMIT BLVD. NE, SUITE 1200
ATLANTA, GA 30319
770-587-4776
LICENSEE NO. PEF000100
AUTHORIZATION NO. J550903

date: AUGUST 2023	detailed: S.GILLIAM
designed: A.FARIDI	checked: V.PATWARI

Perry

HOUSTON COUNTY, GEORGIA

EAST PERRY WWTF

ELECTRICAL GENERAL NOTES AND LEGENDS

project: 148538	contract:
drawing: 100E001	rev.: 0
sheet	of sheets
file	

no.	date	by	ckd	description
0	6/26/24	AF	BEG	ISSUED FOR CONSTRUCTION

KEYED NOTES:

1. PROVIDE LIGHTNING PROTECTION SYSTEM FOR BUILDING. REFER TO SPECIFICATION 26 41 00 FOR REQUIREMENTS.
2. REFER TO DETAILS ON 100E506 FOR SCUM MANHOLE LEVEL SWITCHES LSH-441 AND LSL-442.

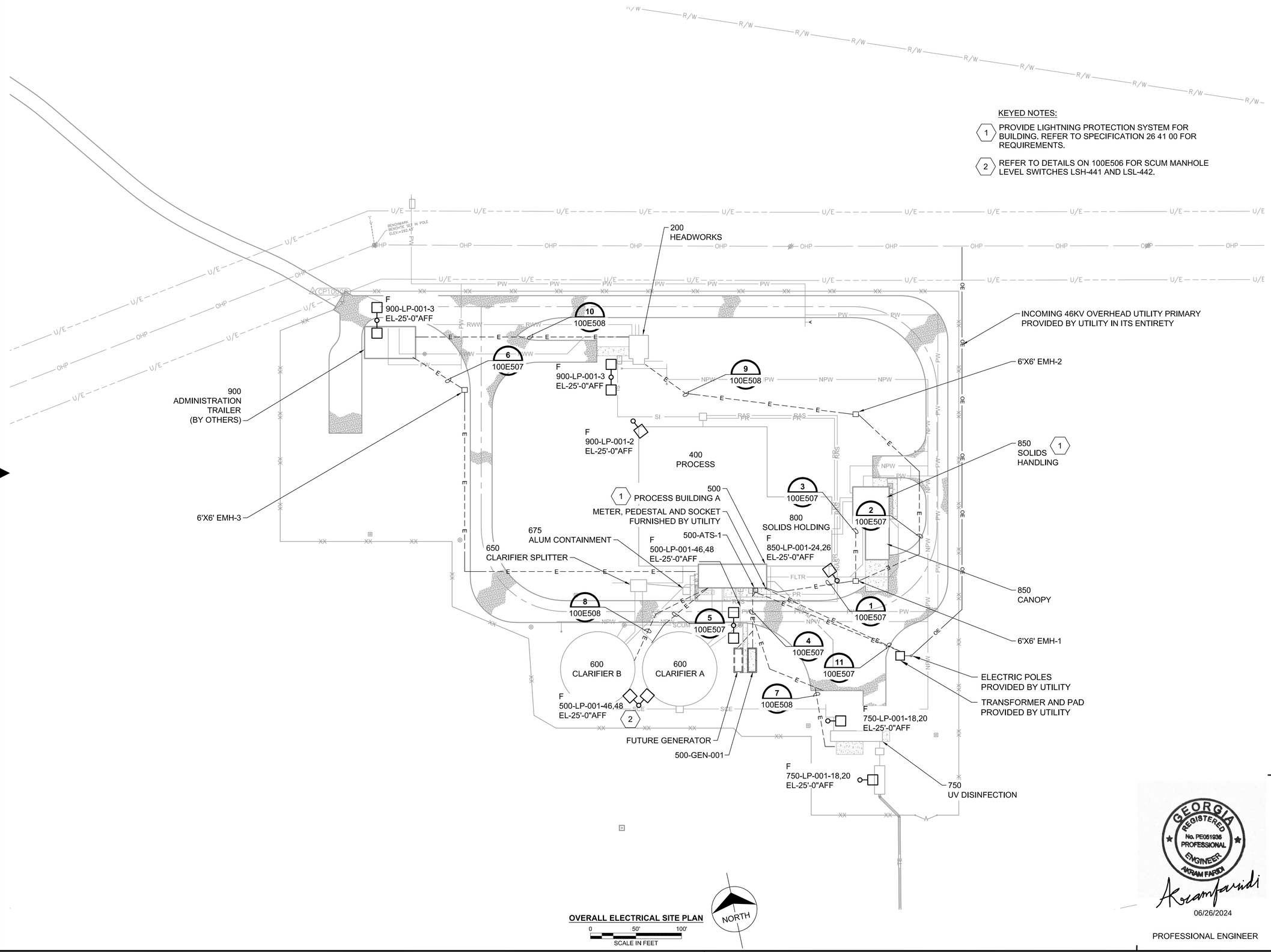

OVERALL ELECTRICAL SITE PLAN

0 50' 100'
SCALE IN FEET

GEORGIA REGISTERED No. PE051935 PROFESSIONAL ENGINEER AKRAM FARIDI

06/26/2024

PROFESSIONAL ENGINEER

BURNS McDONNELL
4004 SUMMIT BLVD. NE, SUITE 1200
ATLANTA, GA 30319
770-587-4776
LICENSEE NO. PEF000100
AUTHORIZATION NO. J550903

date	detailed
AUGUST 2023	A. LILLY
designed	checked
A. FARIDI	V.PATWARI

Perry

HOUSTON COUNTY, GEORGIA

EAST PERRY WWTF

ELECTRICAL
SITE PLAN

project 148538 | contract

drawing **100E100** – rev. **0**

sheet of sheets

file 148538_E100-ELECTRICAL SITE PLAN.DWG

Z:\CLIENTS\WTR\PERRYGA\148538_EASTWWTP\DESIGN\CADD\ELEC\PROD_DWGS\148538_E100-ELECTRICAL SITE PLAN.DWG 6/25/2024 10:48 AM BDBROCHUE

GENERAL NOTES:

1. REFER TO 100E100 FOR ASSOCIATED DUCT BANK ROUTING AND 100E507 FOR DUCT BANK SECTION DETAILS.

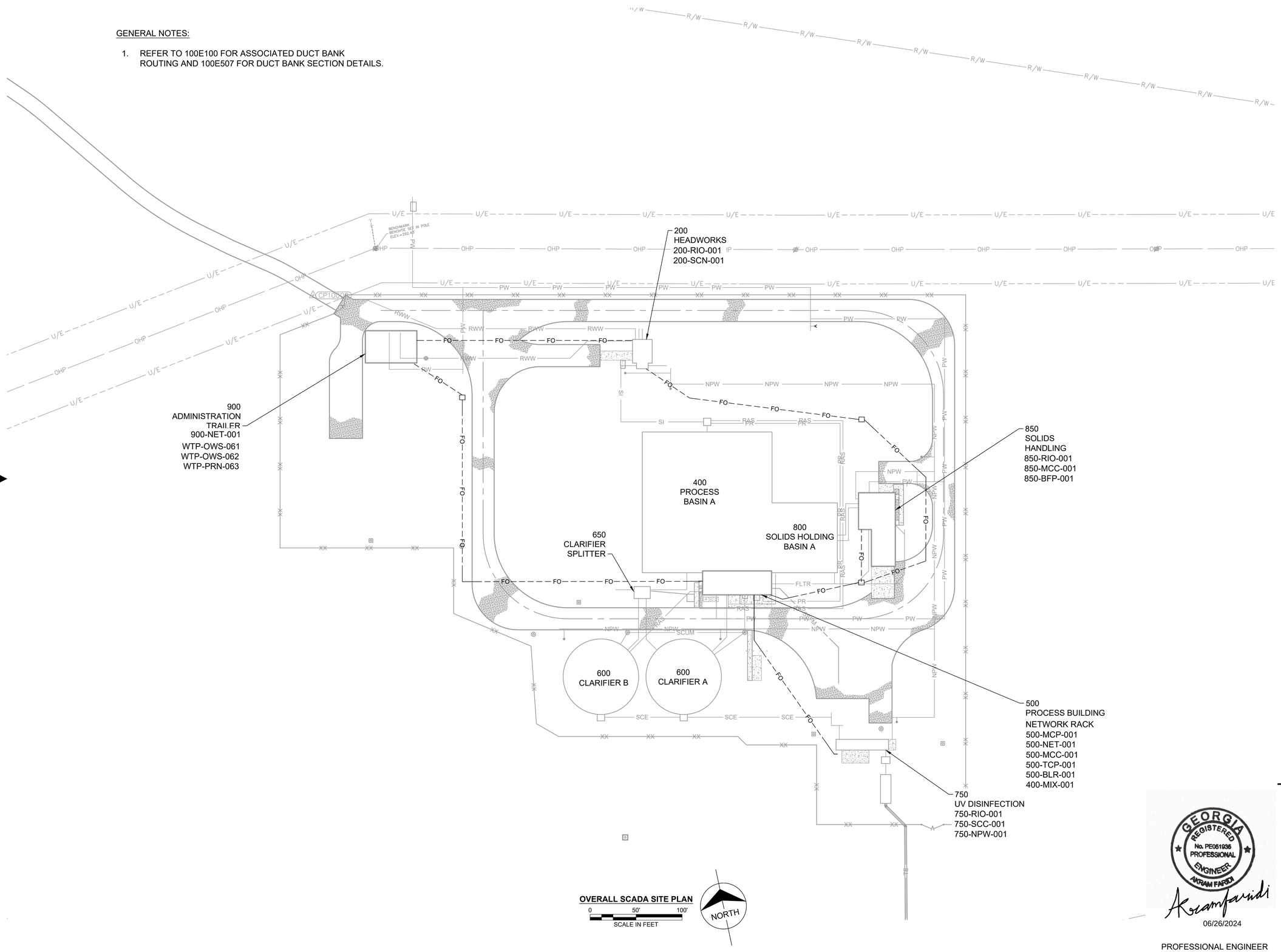

OVERALL SCADA SITE PLAN

0 50' 100'
SCALE IN FEET

NORTH

GEORGIA REGISTERED No. PE051935 PROFESSIONAL ENGINEER AKRAM FARIDI

06/26/2024

PROFESSIONAL ENGINEER

no.	date	by	ckd	description
0	6/26/24	AF	BEG	ISSUED FOR CONSTRUCTION

BURNS McDONNELL
4004 SUMMIT BLVD. NE, SUITE 1200
ATLANTA, GA 30319
770-587-4776
LICENSEE NO. PEF000100
AUTHORIZATION NO. J550903

date	detailed
AUGUST 2023	A. LILLY
designed	checked
A. FARIDI	V.PATWARI

Perry

HOUSTON COUNTY, GEORGIA

EAST PERRY WWTF
SCADA
SITE PLAN

project 148538
contract

drawing **100E101** — rev. **0**

sheet of sheets

file 148538_E101-SCADA SITE PLAN.DWG

Z:\CLIENTS\WTR\PERRYGA\148538_EASTWWTP\DESIGN\CADD\ELEC\PROD_DWGS\148538_E101-SCADA SITE PLAN.DWG 6/25/2024 10:50 AM BDBROCHUE

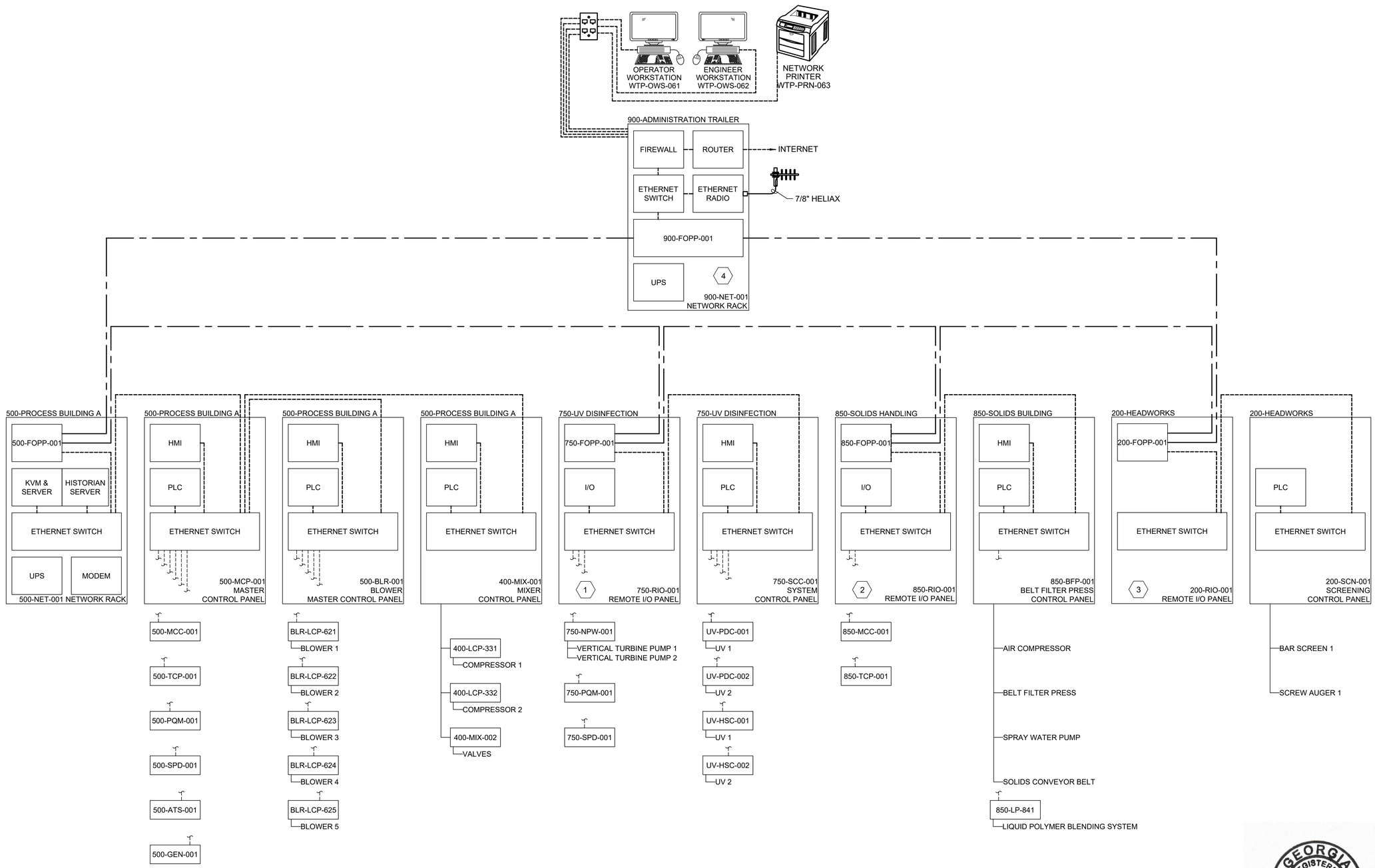

KEYED NOTES:

1. INCLUDE PROVISIONS FOR FUTURE FILTERS 750-FIL-001 AND 750-FIL-002.
2. INCLUDE PROVISIONS FOR A FUTURE BELT PRESS CONTROL PANEL 850-BFP-002.
3. INCLUDE PROVISIONS FOR FUTURE SCREEN 200-SCN-002.
4. INCLUDE PROVISIONS FOR FUTURE INFLUENT PUMP STATION RADIO CONNECTION.

GENERAL NOTES:

1. ALL NETWORK SWITCHES IN THE NETWORK RACK AND MAIN CONTROL PANEL PLC CABINETS SHALL BE MANAGED TYPE. PROVIDE QUANTITY OF PORTS AS REQUIRED. REFER TO SECTION 409533 - PROCESS CONTROL NETWORKS FOR ADDITIONAL REQUIREMENTS.

——— HARD-WIRED
- - - - - ETHERNET
——— – ——— FIBER

GEORGIA REGISTERED No. PE051935 PROFESSIONAL ENGINEER AKRAM FARIDI

06/26/2024

PROFESSIONAL ENGINEER

no.	date	by	ckd	description
0	6/26/24	AF	BEG	ISSUED FOR CONSTRUCTION

BURNS McDONNELL
4004 SUMMIT BLVD. NE, SUITE 1200
ATLANTA, GA 30319
770-587-4776
LICENSEE NO. PEF000100
AUTHORIZATION NO. J550903

date	detailed
AUGUST 2023	A. LILLY
designed	checked
A. FARIDI	V.PATWARI

Perry

HOUSTON COUNTY, GEORGIA

EAST PERRY WWTF
SCADA ARCHITECTURE DRAWING

project	contract
148538	

drawing **100E102** – rev. **0**

sheet of sheets

file 148538_E102-SCADA ARCHITECTURE PLAN.DWG

Z:\CLIENTS\WTR\PERRYGA\148538_EASTWWTP\DESIGN\CADD\ELEC\PROD_DWGS\148538_E102-SCADA ARCHITECTURE PLAN.DWG 6/25/2024 11:28 AM STGILLIAM

no.	date	by	ckd	description
0	6/24/26	AF	BEG	ISSUED FOR CONSTRUCTION

SPACE ENVIRONMENT AND HAZARDOUS RATINGS SCHEDULE

AREA			ENVIRONMENT			MATERIALS	VENTILATION		NEC HAZARDOUS LOCATION CLASSIFICATION	FIRE PROTECTION	REFERENCE	NOTES
BUILDING	SPACE NO.	SPACE NAME	LOCATION	TYPE	EXPOSURE		Rating	Rate	RATING		NFPA 820	
200 - HEADWORKS		UNNAMED	EXTERIOR	PROCESS	WET	SEE SPECIFICATION		NR	CLASS 1 DIV 2		Table 5.2.2, Row 2c	Extends 10 feet wide around equipment/channels, 18 inches above basin wall
400 - PROCESS BASIN A		UNNAMED	SUBMERGED	PROCESS	WET	SEE SPECIFICATION		NR	CLASS 1 DIV 2		Table 5.2.2, Row 7c	Extends 10 feet wide around equipment/channels, 18 inches above basin wall
500 - PROCESS BUILDING A		LOWER LEVEL	INTERIOR	PROCESS	DRY	SEE SPECIFICATION	C	6 ACH	UNCLASSIFIED		Table 4.2.2, Row 15	Unclassified due to 6 ACH, class 1 div 2 if below 6 ACH.
		UPPER LEVEL	INTERIOR	PROCESS	DRY	SEE SPECIFICATION		NR	UNCLASSIFIED		Table 9.1.1 Row 3c	Unclassified due to 6 ACH, class 1 div 2 if below 6 ACH.
		ELECTRICAL ROOM	INTERIOR	ELEC/MECH	DRY	SEE SPECIFICATION		NR	UNCLASSIFIED			
		PR WET WELL	INTERIOR	PROCESS	WET	SEE SPECIFICATION			CLASS 1 DIV 1 INTERIOR, CLASS 1 DIV 2 AROUND HATCH		Table 4.2.2, Row 14	Class 1 Divison I extends 3 feet around vents. Class 1 Divison II extends 5 feet around vents and 18 inches around hatches.
600 - SECONDARY CLARIFIERS		CLARIFIER A	SUBMERGED	PROCESS	WET	SEE SPECIFICATIONS		NR	UNCLASSIFIED			
		CLARIFIER B	SUBMERGED	PROCESS	WET	SEE SPECIFICATIONS		NR	UNCLASSIFIED			
650 - CLARIFIER SPLITTER		UNNAMED	EXTREIOR	PROCESS	WET	SEE...		NR	UNCLASSIFIED			
700 - TERTIARY TREATMENT		UNNAMED	EXTERIOR	PROCESS	WET	SEE SPECIFICATION		NR	UNCLASSIFIED			
750 - UV DISINFECTION		UNNAMED	EXTERIOR	PROCESS	WET	SEE SPECIFICATION		NR	UNCLASSIFIED			
800 - SOLIDS HOLDING BASIN A			EXTERIOR	PROCESS	WET	SEE SPECIFICATION		NR	CLASS 1 DIV 2		TABLE 5.2.2, Row 7c	Extends 10 feet wide around equipment/channels, 18 inches above basin wall
850 - SOLIDS HANDLING	801	BELT PRESS	INTERIOR	PROCESS	DRY	SEE SPECIFICATION	C	6 ACH	UNCLASSIFIED		TABLE 6.2.2(b), Row 12a	Unclassified due to 6 ACH
	803	ELECTRICAL ROOM	INTERIOR	ELEC/MECH	DRY	SEE SPECIFICATION		NR	UNCLASSIFIED			
900 - ADMINISTRATION TRAILER		UNNAMED	INTERIOR	ADMINISTRATIVE	DRY	SEE SPECIFICATION		NR	UNCLASSIFIED			

GEORGIA REGISTERED No. PE051935 PROFESSIONAL ENGINEER AKRAM FARIDI

06/26/2024

BURNS McDONNELL
4004 SUMMIT BLVD. NE, SUITE 1200
ATLANTA, GA 30319
770-587-4776
LICENSEE NO. PEF000100
AUTHORIZATION NO. J550903

date	detailed
12/01/23	A.LILLY
designed	**checked**
A.FARIDI	V.PATWARI

Perry

HOUSTON COUNTY, GEORGIA

EAST PERRY WWTF

SPACE ENVIRONMENT AND HAZARDOUS RATINGS SCHEDULE

project	contract
148538	

drawing 100E103 – rev. 0

sheet of sheets

file

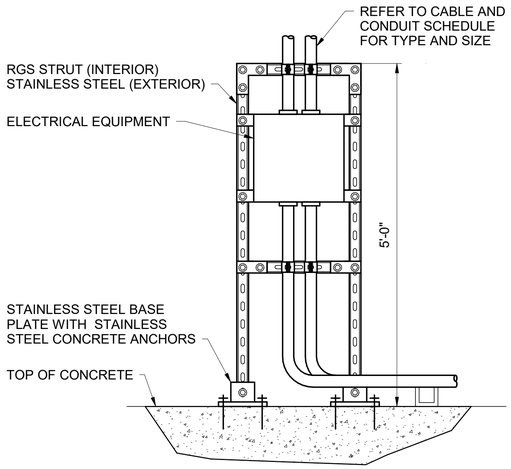

GENERAL NOTE:

1. RACK SIZE IS FOR INFORMATIONAL PURPOSES ONLY. RACK SIZES SHALL BE SIZED TO SUPPORT EQUIPMENT SHOWN ON PLANS.

TYPICAL EXTERIOR RACK ELEVATION
NOT TO SCALE

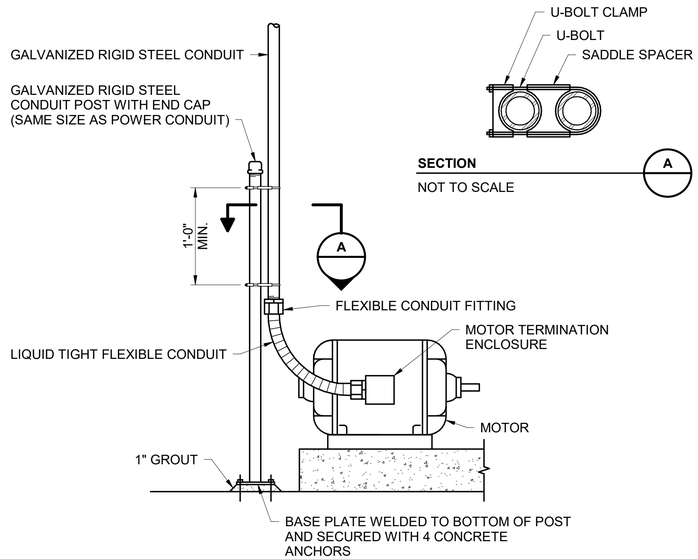

SECTION A
NOT TO SCALE

TYPICAL OVERHEAD CONDUIT SERVICE FOR LARGE MOTORS
NOT TO SCALE

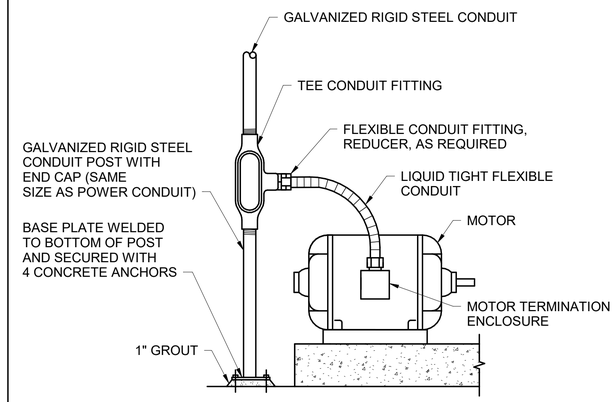

TYPICAL OVERHEAD CONDUIT SERVICE FOR SMALL AND MEDIUM SIZE 480V MOTORS
NOT TO SCALE

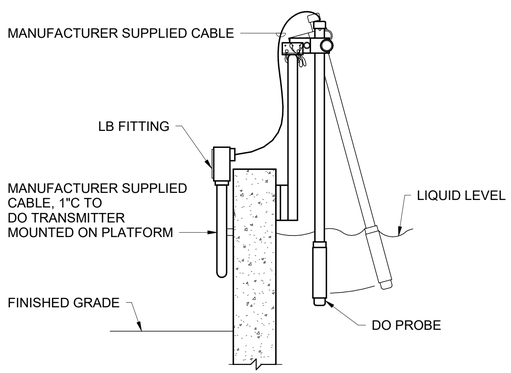

TYPICAL AERATION BASIN DO PROBE INSTALLATION DETAIL
NOT TO SCALE

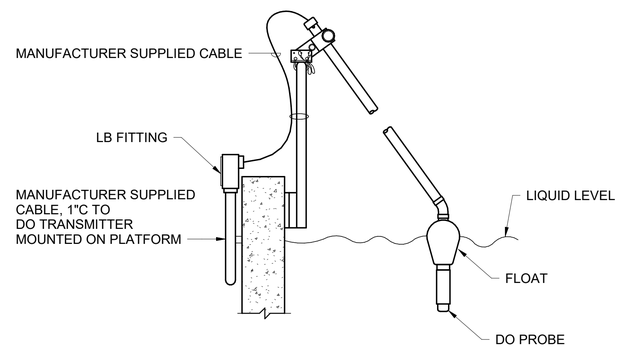

TYPICAL AEROBIC DIGESTER DO PROBE INSTALLATION DETAIL
NOT TO SCALE

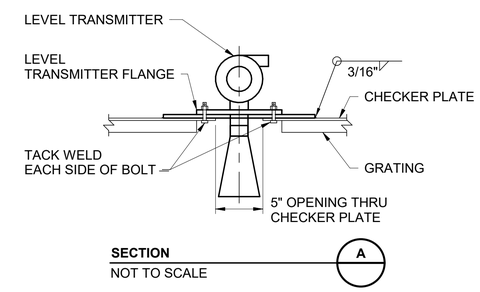

SECTION A
NOT TO SCALE

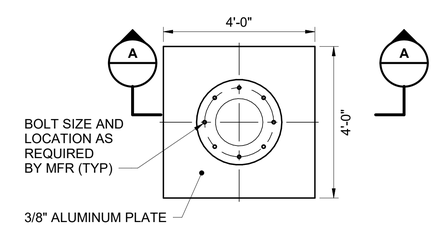

SCREEN CHANNEL LEVEL TRANSMITTER MOUNTING DETAILS

NOT TO SCALE

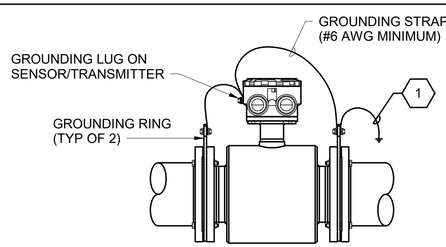

KEYED NOTE:

1. PROVIDE CONNECTION TO GROUNDING ELECTRODE ONLY WHEN INDICATED. POWER CIRCUIT EQUIPMENT GROUNDING CONDUCTOR SHALL NORMALLY SERVE AS EARTH CONNECTION FOR THE INSTRUMENT.

TYPICAL MAG METER GROUNDING DETAIL
NOT TO SCALE

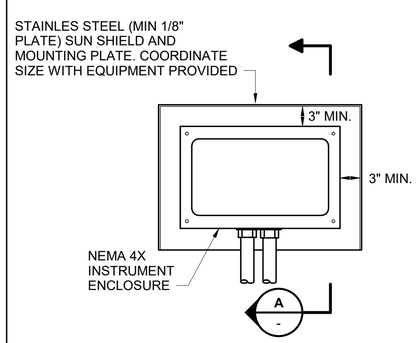

TYPICAL TRANSMITTER SUN SHADE
NOT TO SCALE

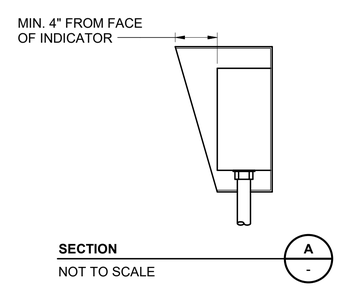

SECTION
NOT TO SCALE

GENERAL NOTE:

1. TRANSMITTER SCREEN SHALL NOT FACE WEST/EAST.

no.	date	by	ckd	description
0	6/24/26	AF	BEG	ISSUED FOR CONSTRUCTION

BURNS McDONNELL
4004 SUMMIT BLVD. NE, SUITE 1200
ATLANTA, GA 30319
770-587-4776
LICENSEE NO. PEF000100
AUTHORIZATION NO. J550903

date	detailed
11/20/23	A. LILLY
designed	**checked**
A. FARIDI	B. GRAEBER

Perry
HOUSTON COUNTY, GEORGIA

GEORGIA REGISTERED No. PE051935 PROFESSIONAL ENGINEER AKRAM FARIDI
06/26/2024

EAST PERRY WWTF
ELECTRICAL STANDARD DETAILS SHEET 1

project	contract
148538	

drawing **100E501** – rev. **0**
sheet of sheets
file

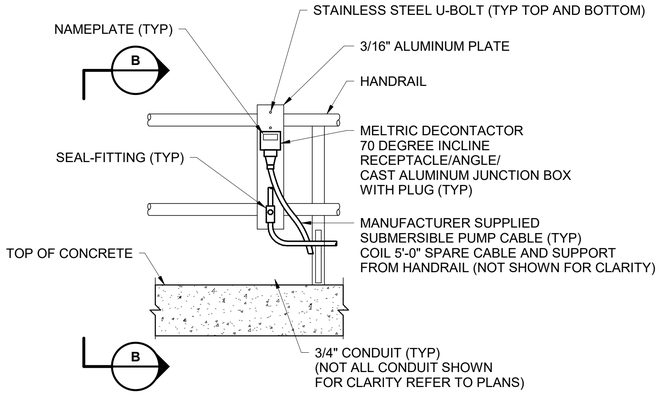

TYPICAL SUBMERSIBLE RAS AND WAS PUMP MELTRIC DECONTACTOR MOUNTING DETAIL

NOT TO SCALE

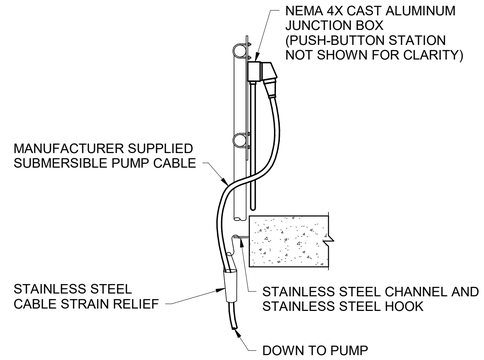

SECTION B

NOT TO SCALE

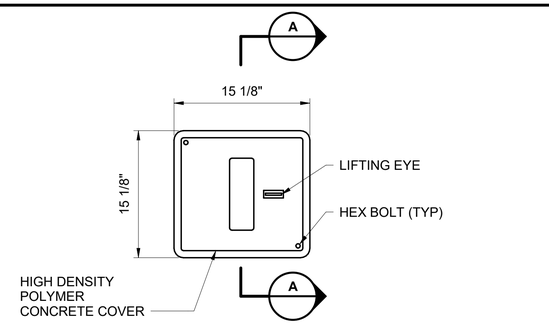

TYPICAL GROUND TEST WELL

NOT TO SCALE

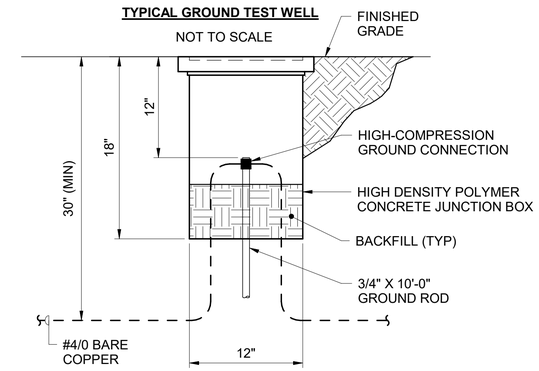

SECTION A

NOT TO SCALE

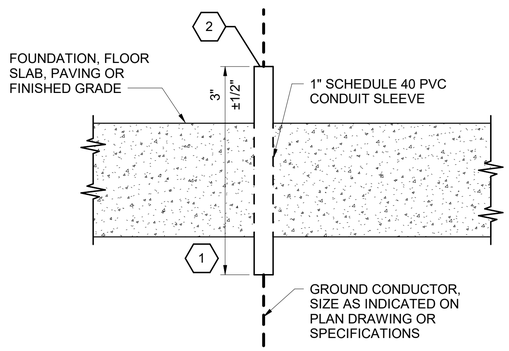

KEYED NOTES:

1. 8" MINIMUM; FOR CONCRETE SLAB, FOUNDATION OR PAVING, EXTEND SLEEVE 2" BELOW CONCRETE OR PAVING.
2. FILL SLEEVE WITH RTV COMPOUND AND CAULK WITH TWO COMPONENT POLYSULFIDE SYSTEM SEALANT PER SPECIFICATION SECTION 03300 - CONCRETE ACCESSORIES.

GROUND CONDUCTOR PROTECTION

NOT TO SCALE

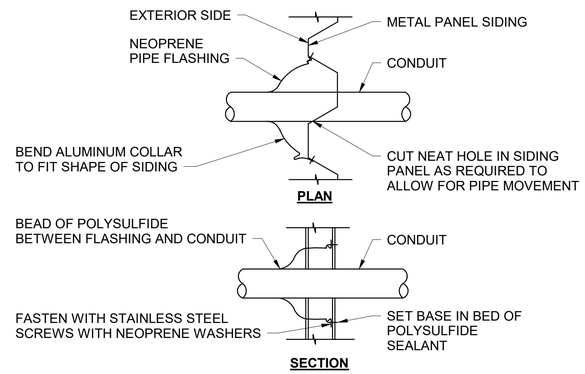

GENERAL NOTE:

1. CONDUIT FLASHING SHALL BE A PREFORMED NEOPRENE FLASHING OF APPROPRIATE SIZE FOR CONDUIT BEING FLASHED. FLASHING SHALL BE "DEKTITE" AS MANUFACTURED BY BUILDEX CO., ELKGROVE, ILLINOIS OR APPROVED EQUAL.

CONDUIT PENETRATION FLASHING THROUGH METAL PANEL WALLS

NOT TO SCALE

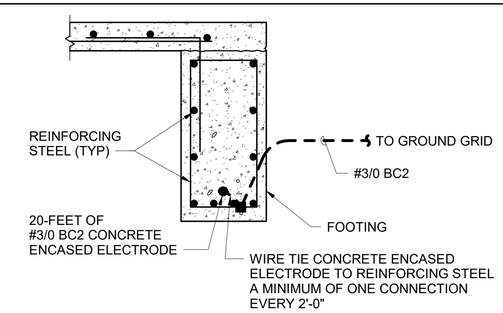

TYPICAL CONCRETE ENCASED ELECTRODE (UFER GROUND) DETAIL

NOT TO SCALE

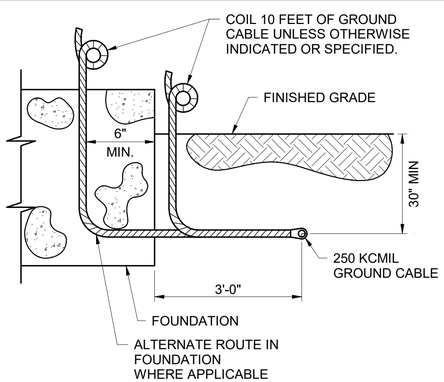

TYPICAL BURIED GROUND GRID DETAIL

NOT TO SCALE

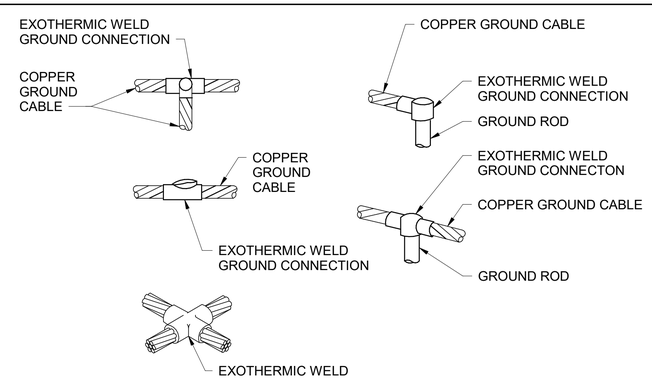

TYPICAL EXOTHERMIC WELDS

NOT TO SCALE

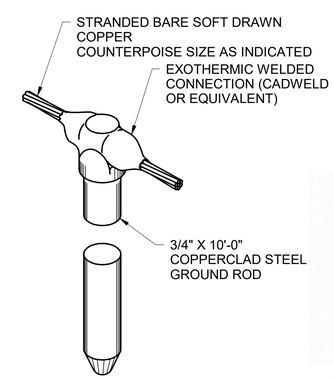

TYPICAL GROUND ROD CONNECTION

NOT TO SCALE

GEORGIA REGISTERED No. PE051935 PROFESSIONAL ENGINEER AKRAM FARIDI

06/26/2024

no.	date	by	ckd	description
0	6/24/26	AF	BEG	ISSUED FOR CONSTRUCTION

BURNS McDONNELL
4004 SUMMIT BLVD. NE, SUITE 1200
ATLANTA, GA 30319
770-587-4776
LICENSEE NO. PEF000100
AUTHORIZATION NO. J550903

date	detailed
11/21/23	A. LILLY
designed	**checked**
A. FARIDI	B. GRAEBER

Perry

HOUSTON COUNTY, GEORGIA

EAST PERRY WWTF

ELECTRICAL STANDARD DETAILS SHEET 2

project	contract
148538	

drawing **100E502** – rev. **0**

sheet of sheets

file

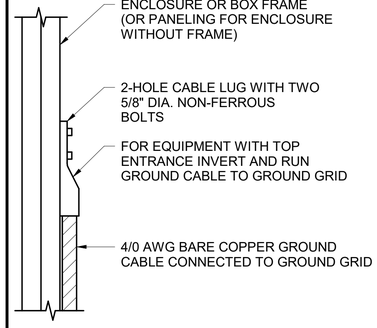

TYPICAL EQUIPMENT ENCLOSURE OR BOX GROUNDING

NOT TO SCALE

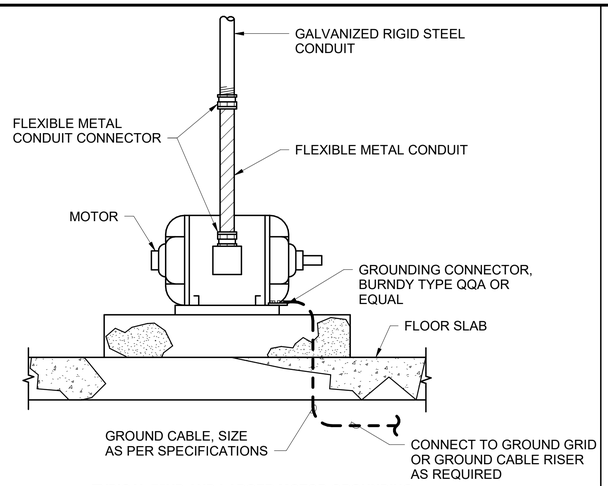

TYPICAL 75HP AND LARGER MOTOR GROUNDING

NOT TO SCALE

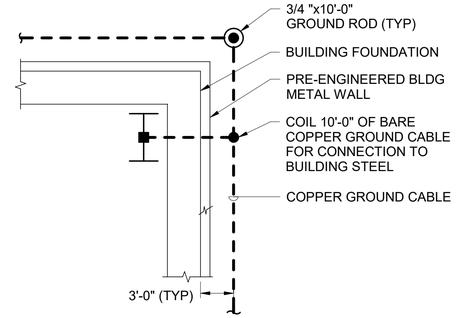

PLAN

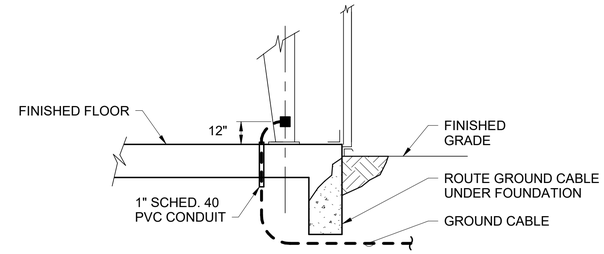

ELEVATION

TYPICAL PRE-ENGINEERED BUILDING GROUNDING

NOT TO SCALE

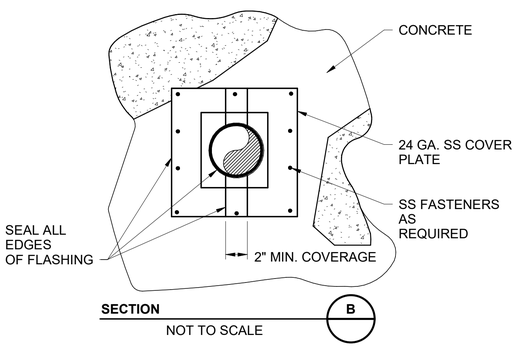

SECTION B

NOT TO SCALE

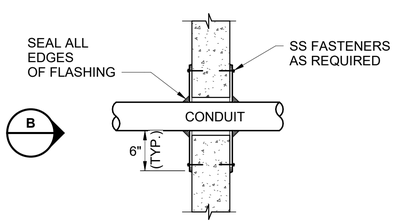

PLAN VIEW

TYPICAL CONDUIT PENETRATION THRU EXTERIOR CONCRETE WALL

NOT TO SCALE

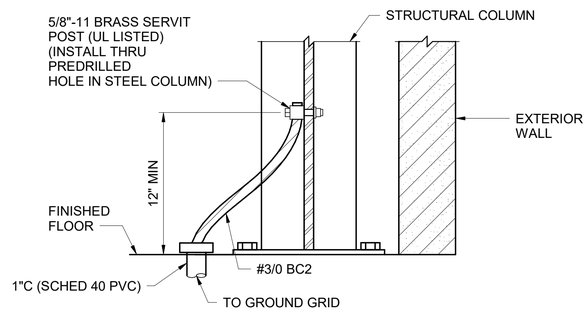

TYPICAL STRUCTURAL STEEL GROUNDING

NOT TO SCALE

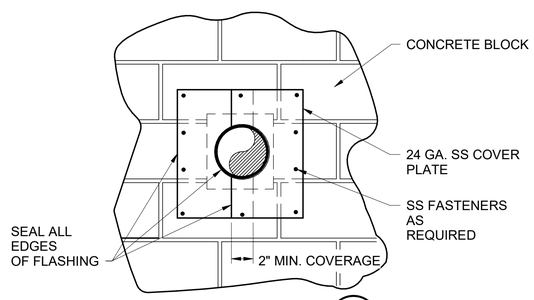

SECTION A

NOT TO SCALE

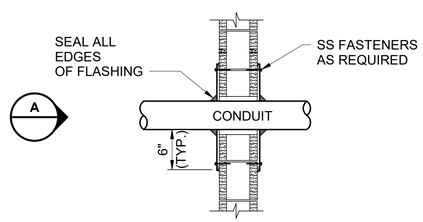

PLAN VIEW

TYPICAL CONDUIT PENETRATION THRU EXTERIOR CMU BLOCK WALL

NOT TO SCALE

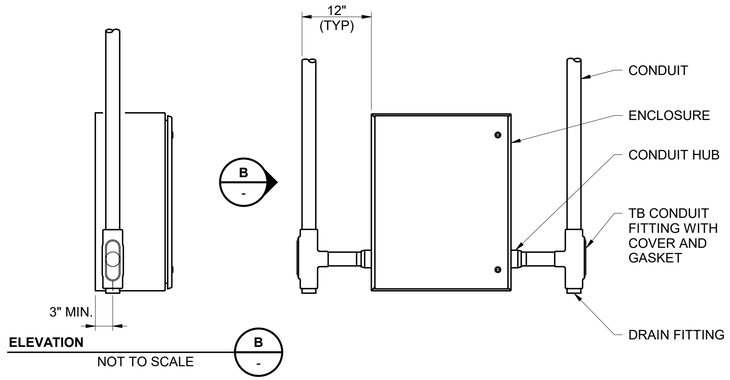

ELEVATION B

NOT TO SCALE

GENERAL NOTE:

1. DETAIL IS TYPICAL FOR BOTH LEFT OR RIGHT SIDE PENETRATION OF THE JUNCTION BOX.

TYPICAL PROCESS AREA CONDUIT PENETRATION INTO ENCLOSURE

NOT TO SCALE

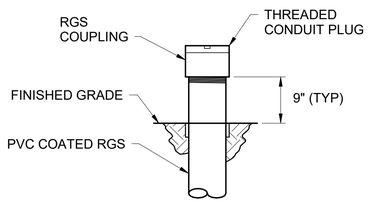

EXTERIOR CONDUIT CAP DETAIL FOR FUTURE EQUIPMENT

NOT TO SCALE

GEORGIA REGISTERED No. PE051935 PROFESSIONAL ENGINEER AKRAM FARIDI

06/26/2024

no.	date	by	ckd	description
0	6/24/26	AF	BEG	ISSUED FOR CONSTRUCTION

BURNS McDONNELL
4004 SUMMIT BLVD. NE, SUITE 1200
ATLANTA, GA 30319
770-587-4776
LICENSEE NO. PEF000100
AUTHORIZATION NO. J550903

date	detailed
11/21/23	A. LILLY
designed	**checked**
A. FARIDI	B. GRAEBER

Perry

HOUSTON COUNTY, GEORGIA

EAST PERRY WWTF

ELECTRICAL STANDARD DETAILS SHEET 3

project	contract
148538	

drawing **100E503** – rev. **0**

sheet of sheets

file

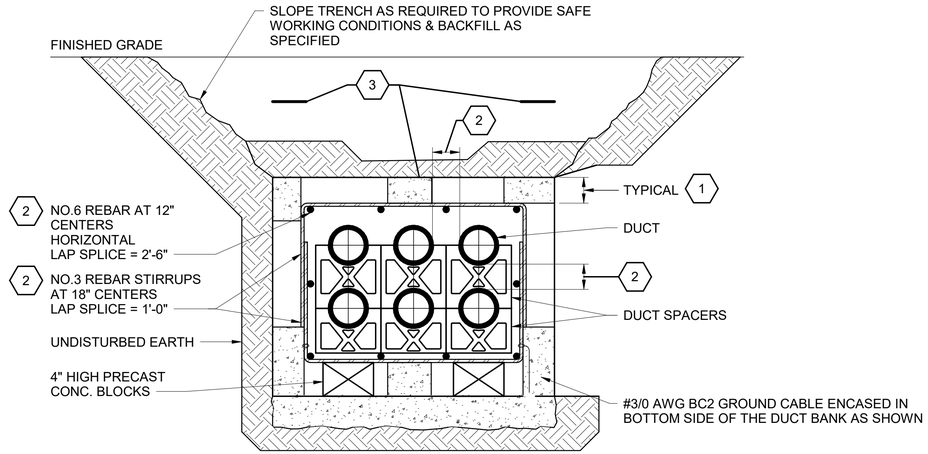

TYPICAL DUCT BANK AND TRENCH SECTION
NOT TO SCALE

GENERAL NOTES:

1. ALL DUCT BANKS SHALL BE ENCASED IN CONCRETE PER SPECIFICATIONS AND SHALL BE SMOOTH FORMED A MINIMUM OF 3'-0" FROM THE TOP OF THE STUB-UPS. DUCT BANKS MAY BE EARTH FORMED WITH UNDISTRUBED EARTH PROVIDED THE EARTH WILL STAND TO A NEAR VERTICAL SLOPE. IF TRENCH IS OVER-EXCAVATED, COMPACT PER SITEWORK PREPARATION AND EARTHWORK SPECIFICATIONS.
2. REFER TO DUCT BANK SECTIONS FOR DUCT QUANTITY, SIZE AND CONFIGURATION.
3. WHERE DUCT BANKS TERMINATE AT A MANHOLE, HANDHOLE OR OTHER UNDERGROUND STRUCTURE THE DUCTS SHALL BE SLOPED A MINIMUM OF 1/8 IN./FT/ UNLESS OTHERWISE NOTED TO PROVIDE DRAINAGE BACK TO THE STRUCTURE.

KEYED NOTES:

1. REINFORCING STEEL SHALL BE USED IN [ALL DUCT BANKS] [ALL DUCT BANKS PASSING UNDER DEFINED ROADWAYS] UNLESS OTHERWISE NOTED. DO NOT ALLOW REINFORCING STEEL TO BE IN CONTACT WITH DUCTS & PROVIDE A MINIMUM OF 3" OF CONCRETE COVER OVER THE REINFORCING STEEL.
2. INSTALL INTERLOCKING TYPE PLASTIC DUCT SPACERS AT INTERVALS PER SPECIFICATIONS TO MAINTAIN A 7.5 INCH MINIMUM HORIZONTAL AND VERTICAL SPACING BETWEEN CENTERLINE OF DUCTS. PREFABRICATED PVC TEMPLATE SPACERS MAY BE USED IN LIEU OF INTERLOCKING TYPE.
3. MIX RED DYE POWDER INTO THE CONCRETE USED FOR DUCT BANKS AND PROVIDE METALLIC WARNING TAPES ABOVE THE OUTSIDE EDGES ON BOTH SIDES OF THE DUCT BANKS AS CAUTIONARY MARKINGS.

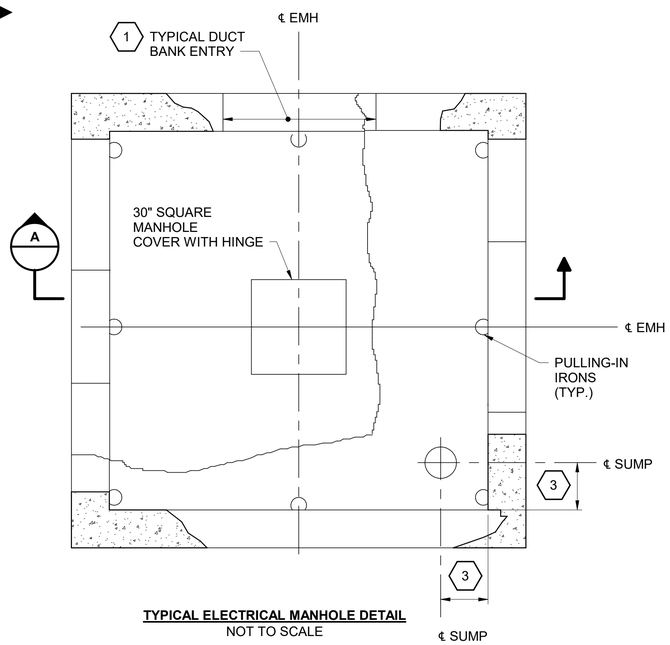

TYPICAL ELECTRICAL MANHOLE DETAIL
NOT TO SCALE

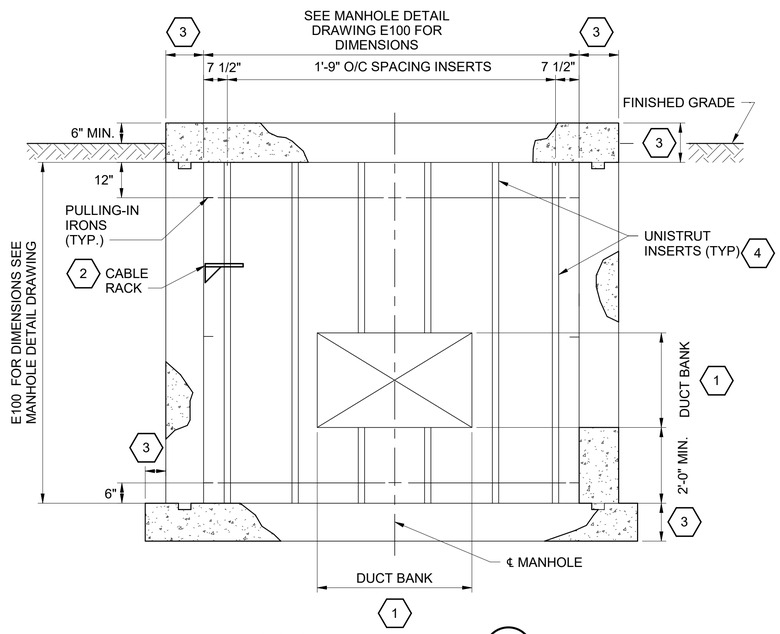

SECTION A
NOT TO SCALE

KEYED NOTES:

1. LOCATION AND SIZE OF DUCT BANK ENTRY VARIES WITH EACH MANHOLE. SEE ELECTRICAL DUCT BANK PLANS, SECTIONS AND THE DETAILED MANHOLE ENTRANCES SHOWN ON DWG. E100.
2. CABLE RACKS (AND CABLE TRAY WHEN USED) SHALL BE ORGANIZED BY VOLTAGE CLASS WITH THE HIGHEST VOLTAGE CLASS ON TOP AND THE LOWEST VOLTAGE CLASS ON THE BOTTOM. CABLE RACKS SHALL B EUSED ONLY FOR POWER CABLE.
3. FOR STRUCTURAL MANHOLE LOCATIONS SEE DWG. 100E100.
4. CONCRETE INSERTS TO BE CONTINUOUS CONCRETE INSERT STRUCTS, NUMBER B22I-120, HOT DIP GALVANIZED, AS MANUFACTURED BY B-LINE SYSTEMS, INC. OR APPROVED EQUAL.

no.	date	by	ckd	description
0	6/24/26	AF	BEG	ISSUED FOR CONSTRUCTION

BURNS McDONNELL
4004 SUMMIT BLVD. NE, SUITE 1200
ATLANTA, GA 30319
770-587-4776
LICENSEE NO. PEF000100
AUTHORIZATION NO. J550903

date	detailed
11/21/23	A. LILLY
designed	**checked**
A. FARIDI	B. GRAEBER

Perry
HOUSTON COUNTY, GEORGIA

GEORGIA REGISTERED No. PE051935 PROFESSIONAL ENGINEER AKRAM FARIDI
06/26/2024

EAST PERRY WWTF
ELECTRICAL STANDARD DETAILS SHEET 4

project	contract
148538	

drawing **100E504** – rev. **0**
sheet of sheets
file

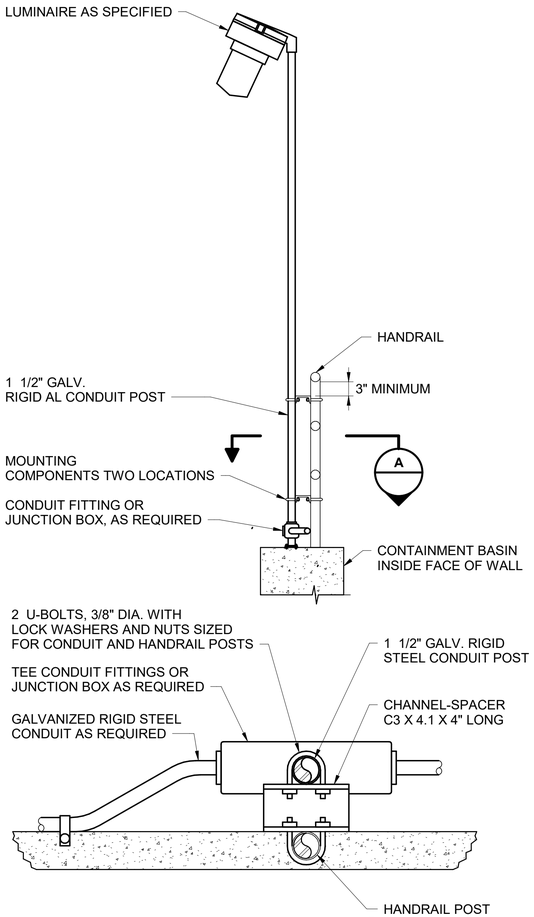

SECTION A
NOT TO SCALE

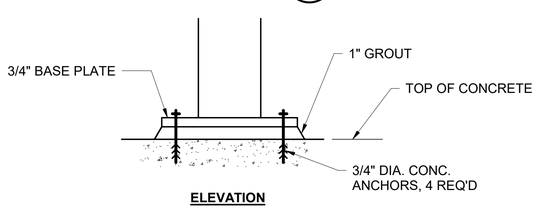

ELEVATION

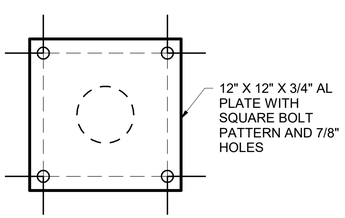

BASE PLATE PLAN

TYPICAL MOUNTING DETAIL
LUMINAIRE TO HANDRAIL AT CONTAINMENT BASIN WALL
NOT TO SCALE

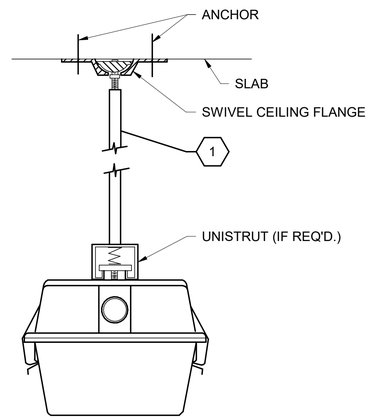

KEYED NOTE:

1 ADJUST ROD LENGTH ACCORDING TO MOUNTING HEIGHT SHOWN ON LIGHTING PLANS.

TYPICAL GASKETED FIXTURE MOUNTING DETAIL
NOT TO SCALE

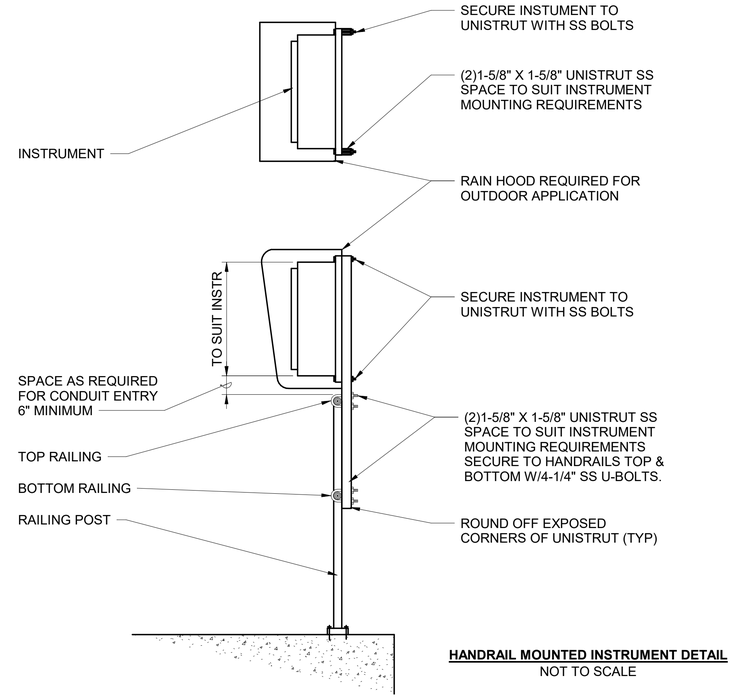

HANDRAIL MOUNTED INSTRUMENT DETAIL
NOT TO SCALE

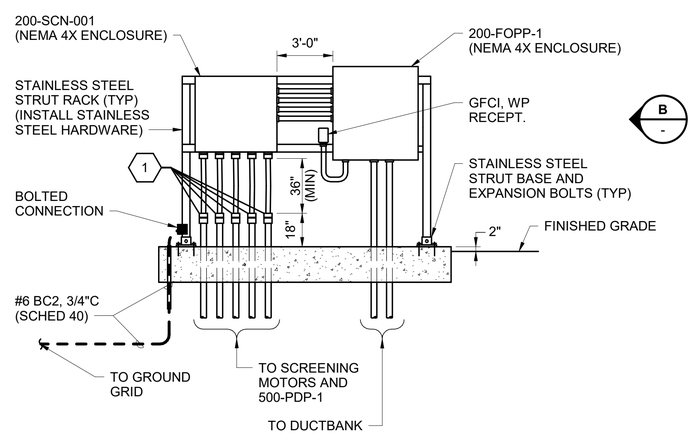

KEYED NOTES:

1 ANY AND ALL EQUIPMENT ADJACENT TO INDICATED STUB UPS FROM WET WELL SHALL MAINTAIN A MINIMUM OF 36 INCHES BETWEEN STUB UP AND EDGE OF EQUIPMENT.

ELECTRICAL RACK ELEVATION

NOT TO SCALE

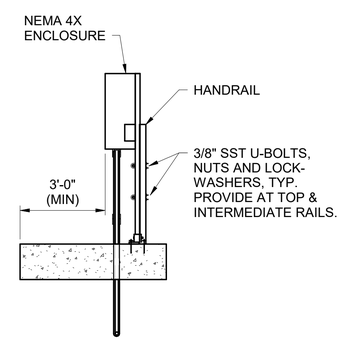

ELEVATION B
NOT TO SCALE

GEORGIA REGISTERED No. PE051935 PROFESSIONAL ENGINEER AKRAM FARIDI

06/26/2024

no.	date	by	ckd	description
0	6/24/26	AF	BEG	ISSUED FOR CONSTRUCTION

BURNS McDONNELL
4004 SUMMIT BLVD. NE, SUITE 1200
ATLANTA, GA 30319
770-587-4776
LICENSEE NO. PEF000100
AUTHORIZATION NO. J550903

date 11/21/23	detailed A. LILLY
designed A. FARIDI	checked B. GRAEBER

Perry
HOUSTON COUNTY, GEORGIA

EAST PERRY WWTF
ELECTRICAL STANDARD DETAILS SHEET 5

project 148538	contract
drawing 100E505	rev. 0
sheet	of sheets
file	

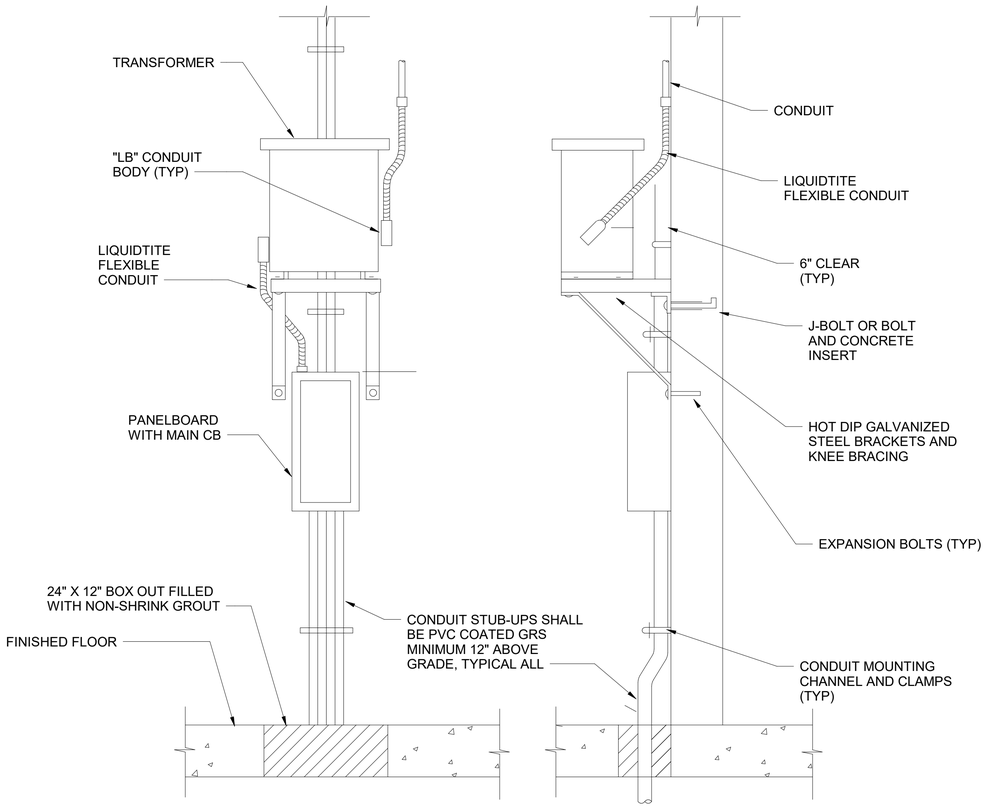

FRONT **SIDE**

TRANSFORMER LIGHTING PANEL MOUNT

NOT TO SCALE

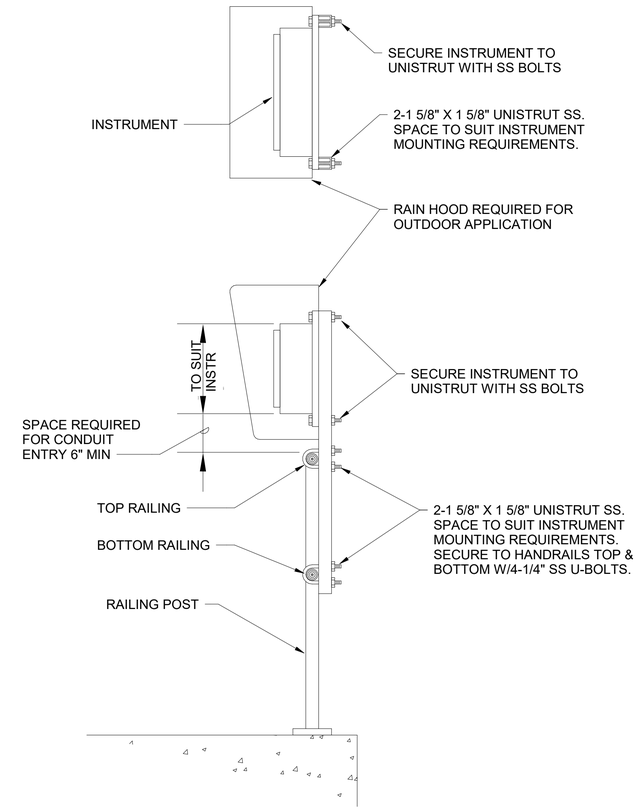

HANDRAIL MOUNTING FOR INSTRUMENTS

NOT TO SCALE

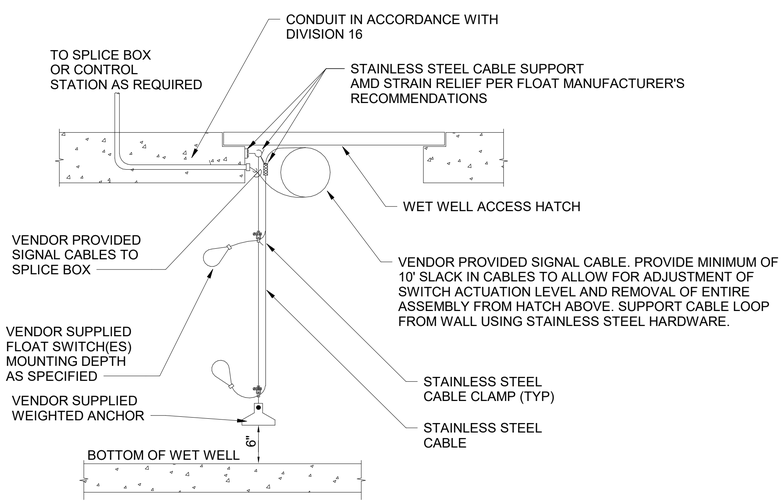

BALL FLOAT CABLE HATCH ACCESS

NOT TO SCALE

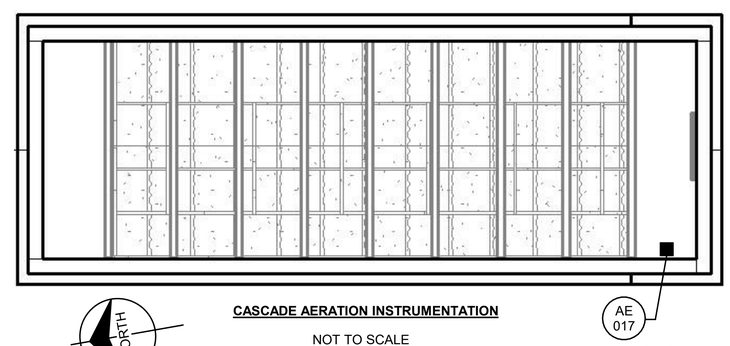

CASCADE AERATION INSTRUMENTATION

NOT TO SCALE

GENERAL NOTES:

1. SEE DO PROBE INSTALLATION DETAIL ON 100E002 FOR MORE INFORMATION
2. ASSOCIATED TRANSMITTER FOR DO PROBE LOCATED ON 750E103.

GEORGIA REGISTERED No. PE051935 PROFESSIONAL ENGINEER AKRAM FARIDI

06/26/2024

no.	date	by	ckd	description
0	6/24/26	AF	BEG	ISSUED FOR CONSTRUCTION

BURNS McDONNELL
4004 SUMMIT BLVD. NE, SUITE 1200
ATLANTA, GA 30319
770-587-4776
LICENSEE NO. PEF000100
AUTHORIZATION NO. J550903

date	detailed
03/18/24	A. LILLY
designed	**checked**
A. FARIDI	B. GRAEBER

Perry

HOUSTON COUNTY, GEORGIA

EAST PERRY WWTF

ELECTRICAL STANDARD DETAILS SHEET 6

project	contract
148538	

drawing **100E506** – rev. **0**

sheet of sheets

file

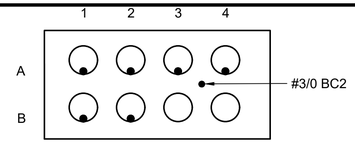

ELECTRICAL DUCT BANK "A"

DUCT SCHEDULE FOR DUCT BANK "A"		
DUCT (ROW x COLUMN)	DUCT SIZE	CIRCUIT DESCRIPTION
A1	4"	480V FROM 500-SWBD-001 TO 850-MCC-001 VIA EMH-1
A2	4"	480V FROM 500-SWBD-001 TO 850-MCC-001 VIA EMH-1
A3	4"	SPARE FROM 500-SWBD-001 TO 850-MCC-001 VIA EMH-1
A4	2"	DIGITAL FROM BUIILDING 500 TO BUILDING 850 VIA EMH-1
B1	2"	ANALOG FROM BUILDING 500 TO BUILDING 850 VIA EMH-1
B2	4"	FIBER FROM BUILDING 500 TO BUILDING 850 VIA EMH-1
B3	4"	SPARE FROM BUILDING 500 TO BUILDING 850 VIA EMH-1
B4	2"	SPARE FROM BUILDING 500 TO BUILDING 850 VIA EMH-1

SECTION 1 / 100E100
NOT TO SCALE

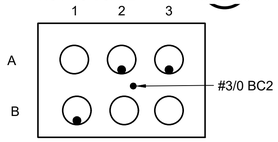

ELECTRICAL DUCT BANK "D"

DUCT SCHEDULE FOR DUCT BANK "D"		
DUCT (ROW x COLUMN)	DUCT SIZE	CIRCUIT DESCRIPTION
A1	4"	SPARE FROM BLDG. 850 TO STR.200 VIA EMH-2
A2	2"	DIGITAL FROM BLDG. 850 TO STR.200 VIA EMH-2
A3	2"	ANALOG FROM BLDG. 850 TO STR.200 VIA EMH-2
B1	4"	FIBER OPTIC FROM BLDG. 850 TO STR.200 VIA EMH-2
B2	4"	SPARE CONDUIT FROM BLDG. 850 TO STR.200 VIA EMH-2
B3	2"	SPARE CONDUIT FROM BLDG. 850 TO STR.200 VIA EMH-2

SECTION 2 / 100E100
NOT TO SCALE

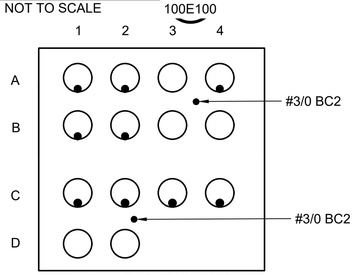

ELECTRICAL DUCT BANK "I"

DUCT SCHEDULE FOR DUCT BANK "I"		
DUCT (ROW x COLUMN)	DUCT SIZE	CIRCUIT DESCRIPTION
A1	4"	480V FROM 500-SWBD-001 TO 850-MCC-001
A2	4"	480V FROM 500-SWBD-001 TO 850-MCC-001
A3	4"	SPARE FROM 500-SWBD-001 TO 850-MCC-001
A4	2"	DIGITAL FROM BUILDING 500 TO BUILDING 850
B1	2"	ANALOG FROM BUILDING 500 TO BUILDING 850
B2	4"	FIBER FROM BUILDING 500 TO BUILDING 850
B3	4"	SPARE FROM BUILDING 500 TO BUILDING 850
B4	2"	SPARE FROM BUILDING 500 TO BUILDING 850
C1	4"	480V POWER FROM 850-PDP-001 TO 200-SCN-001 VIA EMH-1 &EMH-2
C2	2"	DIGITAL FROM FROM BLDG. 850 TO STR. 200 VIA EMH-1 & EMH-2
C3	2"	ANALOG FROM FROM BLDG. 850 TO STR. 200 VIA EMH-1 & EMH-2
C4	4"	FIBER OPTIC FROM FROM BLDG. 850 TO STR. 200 VIA EMH-1 & EMH-2
D1	4"	SPARE CONDUIT FROM FROM BLDG. 850 TO STR. 200 VIA EMH-1 & EMH-2
D2	2"	SPARE CONDUIT FROM FROM BLDG. 850 TO STR. 200 VIA EMH-1 & EMH-2

SECTION 3 / 100E100
NOT TO SCALE

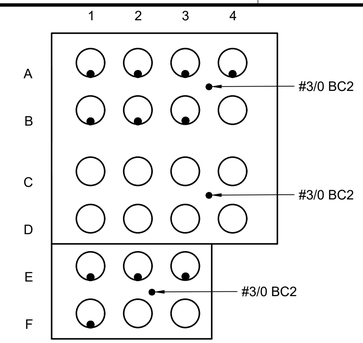

ELECTRICAL DUCT BANK "B"

DUCT SCHEDULE FOR DUCTBANK "B"		
DUCT (ROW x COLUMN)	DUCT SIZE	CIRCUIT DESCRIPTION
A1	4"	480V POWER FROM 500-ATS-001 TO 500-GEN-001
A2	4"	480V POWER FROM 500-ATS-001 TO 500-GEN-001
A3	4"	480V POWER FROM 500-ATS-001 TO 500-GEN-001
A4	4"	SPARE FROM 500-ATS-001 TO 500-GEN-001
B1	2"	DIGITAL FROM 500-ATS-001 TO 500-GEN-001
B2	2"	ANALOG FROM 500-ATS-001 TO 500-GEN-001
B3	2"	COMMUNICATION FROM 500-NET-001 TO 500-GEN-001
B4	4"	SPARE FROM BUILDING 500 TO 500-GEN-001
C1	4"	SPARE FROM 500-ATS-001 TO FUTURE 500-GEN-002
C2	4"	SPARE FROM 500-ATS-001 TO FUTURE 500-GEN-002
C3	4"	SPARE FROM 500-ATS-001 TO FUTURE 500-GEN-002
C4	4"	SPARE FROM 500-ATS-001 TO FUTURE 500-GEN-002
D1	2"	SPARE FROM 500-ATS-001 TO FUTURE 500-GEN-002
D2	2"	SPARE FROM 500-ATS-001 TO FUTURE 500-GEN-002
D3	2"	SPARE FROM 500-ATS-001 TO FUTURE 500-GEN-002
D4	4"	SPARE FROM 500-ATS-001 TO FUTURE 500-GEN-002
E1	4"	480V POWER FROM 500-SWBD-001 TO 750-PDP-001
E2	2"	DIGITAL FROM 500-MCP-001 TO 750-RIO-001
E3	2"	ANALOG FROM 500-MCP-001 TO 750-RIO-001
F1	2"	FIBER FROM 500-NET-001 TO 750-SCC-001
F2	4"	SPARE CONDUIT
F3	2"	SPARE CONDUIT

SECTION 4 / 100E100
NOT TO SCALE

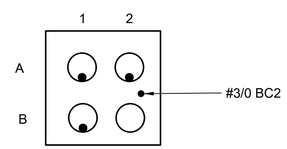

ELECTRICAL DUCT BANK "E"

DUCT SCHEDULE FOR DUCTBANK "E"		
DUCT (ROW x COLUMN)	DUCT SIZE	CIRCUIT DESCRIPTION
A1	2"	480V POWER FROM 500-MCC-1 TO CLA-SC-501
A2	2"	DIGITAL FROM BLDG. 500 TO CLARIFIER A JUNCTION BOX
B1	2"	ANALOG FROM BLDG. 500 TO CLARIFIER A JUNCTION BOX
B2	2"	120V POWER FROM 500-LP-001 TO CLARIFIER A

SECTION 5 / 100E100
NOT TO SCALE

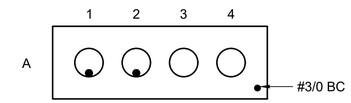

ELECTRICAL DUCT BANK "H"

DUCT SCHEDULE FOR DUCTBANK "H"		
DUCT (ROW x COLUMN)	DUCT SIZE	CIRCUIT DESCRIPTION
A1	4"	480V POWER FROM 500-SWBD-001 TO ADMINISTRATION TRAILER
A2	4"	FIBER OPTIC FROM BUILDING 500 TO BUILDING 900
A3	4"	SPARE FROM BUILDING 500 TO BUILDING 900
A4	4"	SPARE FROM BUILDING 500 TO BUILDING 900

SECTION 6 / 100E100
NOT TO SCALE

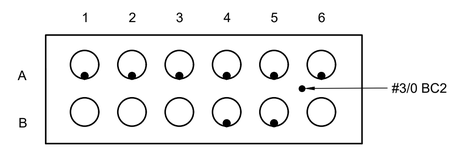

ELECTRICAL DUCT BANK "K"

DUCT SCHEDULE FOR DUCT BANK "K"		
DUCT (ROW x COLUMN)	DUCT SIZE	CIRCUIT DESCRIPTION
A1	4"	480V POWER FROM UTILITY XFMR TO 500-ATS-001
A2	4"	480V POWER FROM UTILITY XFMR TO 500-ATS-001
A3	4"	480V POWER FROM UTILITY XFMR TO 500-ATS-001
A4	4"	480V POWER FROM UTILITY XFMR TO 500-ATS-001
A5	4"	480V POWER FROM UTILITY XFMR TO 500-ATS-001
A6	4"	480V POWER FROM UTILITY XFMR TO 500-ATS-001
B1	4"	SPARE FROM UTILITY XFMR TO 500-ATS-001
B2	4"	SPARE FROM UTILITY XFMR TO 500-ATS-001
B3	4"	SPARE FROM UTILITY XFMR TO 500-ATS-001
B4	2"	CONTROL POWER FROM UTILITY XFMR TO UTILITY METER
B5	2"	CONTROL POWER FROM UTILITY XFMR TO UTILITY METER
B6	2"	SPARE FROM UTILITY XFMR TO UTILITY METER

SECTION 11 / 100E100
NOT TO SCALE

GEORGIA REGISTERED No. PE051936 PROFESSIONAL ENGINEER AKRAM FARIDI

06/26/2024

PROFESSIONAL ENGINEER

no.	date	by	ckd	description
0	6/26/24	AF	BEG	ISSUED FOR CONSTRUCTION

BURNS McDONNELL
4004 SUMMIT BLVD. NE, SUITE 1200
ATLANTA, GA 30319
770-587-4776
LICENSEE NO. PEF000100
AUTHORIZATION NO. J550903

date	detailed
OCTOBER 23, 2023	A. LILLY
designed	checked
A. FARIDI	V.PATWARI

Perry
HOUSTON COUNTY, GEORGIA

EAST PERRY WWTF
DUCTBANK SECTIONS AND DETAILS

project 148538 | contract

drawing **100E507** – rev. **0**

sheet of sheets

file 148538_E507-DUCT BANK SECTIONS.DWG

Z:\CLIENTS\WTR\PERRYGA\148538_EASTWWTP\DESIGN\CADD\ELEC\PROD_DWGS\148538_E507-DUCT BANK SECTIONS.DWG 6/25/2024 10:51 AM BDBROCHUE

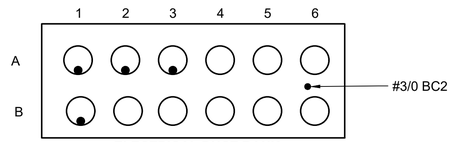

ELECTRICAL DUCT BANK "C"

DUCT SCHEDULE FOR DUCT BANK "C"		
DUCT (ROW x COLUMN)	DUCT SIZE	CIRCUIT DESCRIPTION
A1	4"	480V POWER FROM 500-SWBD-001 TO 750-PDP-001
A2	2"	DIGITAL FROM 500-MCP-1 TO 750-RIO-001
A3	2"	ANALOG FROM 500-MCP-1 TO 750-RIO-001
A4	2"	SPARE FROM 750-PDP-1 TO FUTURE STR. 700
A5	2"	SPARE FROM 750-PDP-1 TO FUTURE STR. 700
A6	2"	SPARE FROM 750-RIO-001 TO FUTURE STR. 700
B1	2"	CAT6 FROM NETWORK RACK TO 750-SCC-001
B2	4"	SPARE CONDUIT
B3	2"	SPARE CONDUIT
B4	2"	SPARE FROM 750-RIO-001 TO FUTURE STR. 700
B5	2"	SPARE FROM 750-LP-001 TO FUTURE STR. 700
B6	2"	SPARE FROM 750-LP-001 TO FUTURE STR. 700

SECTION 7 / 100E100
NOT TO SCALE

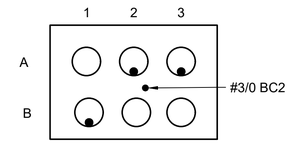

ELECTRICAL DUCT BANK "G"

DUCT SCHEDULE FOR DUCT BANK "G"		
DUCT (ROW x COLUMN)	DUCT SIZE	CIRCUIT DESCRIPTION
A1	4"	SPARE FROM 850-MCC-001 TO STR. 200
A2	2"	DIGITAL FROM STR 200 TO BUILDING 850
A3	2"	ANALOG FROM STR 200 TO BUILDING 850
B1	4"	FIBER OPTIC FROM STR 200 TO BUILDING 850
B2	4"	SPARE CONDUIT STR 200 TO BUILDING 850
B3	2"	SPARE CONDUIT STR 200 TO BUILDING 850

SECTION 9 / 100E100
NOT TO SCALE

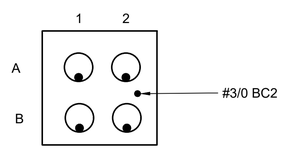

ELECTRICAL DUCT BANK "F"

DUCT SCHEDULE FOR DUCTBANK "F"		
DUCT (ROW x COLUMN)	DUCT SIZE	CIRCUIT DESCRIPTION
A1	2"	480V POWER FROM 500-MCC-1 TO CLA-SC-502
A2	2"	DIGITAL FROM BLDG. 500 TO CLARIFIER B JUNCTION BOX
B1	2"	ANALOG FROM BLDG. 500 TO CLARIFIER B JUNCTION BOX
B2	2"	120V POWER FROM 500-LP-001 TO CLARIFIER B

SECTION 8 / 100E100
NOT TO SCALE

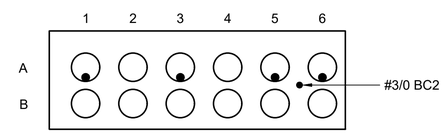

ELECTRICAL DUCT BANK "J"

DUCT SCHEDULE FOR DUCT BANK "J"		
DUCT (ROW x COLUMN)	DUCT SIZE	CIRCUIT DESCRIPTION
A1	2"	FIBER FROM BUILDING 900 TO STRUCTURE 200
A2	2"	SPARE FROM BUILDING 900 TO STRUCTURE 200
A3	2"	480V POWER FROM 900-PDP-001 TO 200-SCN-001
A4	2"	SPARE FROM BUILDING 900 TO STRUCTURE 200
A5	2"	120V POWER FROM 900-LP-001 TO STR. 200
A6	2"	120V POWER FROM 900-LP-001 TO STR. 200
B1	2"	SPARE FOR 480V POWER FROM 900-PDP-001 TO FUTURE 200-SCN-002
B2	2"	SPARE FOR 480V POWER FROM 900-PDP-001 TO FUTURE 200-SCN-002
B3	2"	SPARE FROM 900-PDP-001 TO FUTURE GRIT STR.
B4	2"	SPARE FROM 900-PDP-001 TO FUTURE GRIT STR.
B5	2"	SPARE FROM 900-LP-001 TO FUTURE GRIT STR.
B6	2"	SPARE FROM 900-LP-001 TO FUTURE GRIT STR.

SECTION 10 / 100E100
NOT TO SCALE

no.	date	by	ckd	description
0	6/26/24	AF	BEG	ISSUED FOR CONSTRUCTION

BURNS McDONNELL
4004 SUMMIT BLVD. NE, SUITE 1200
ATLANTA, GA 30319
770-587-4776
LICENSEE NO. PEF000100
AUTHORIZATION NO. J550903

date	detailed
OCTOBER 23, 2023	A. LILLY
designed	checked
A. FARIDI	V.PATWARI

Perry
HOUSTON COUNTY, GEORGIA

GEORGIA REGISTERED No. PE051935 PROFESSIONAL ENGINEER AKRAM FARIDI
06/26/2024
PROFESSIONAL ENGINEER

EAST PERRY WWTF
DUCTBANK SECTIONS AND DETAILS

project 148538 | contract
drawing **100E508** – rev. **0**
sheet of sheets
file 148538_E508-DUCT BANK SECTIONS.DWG

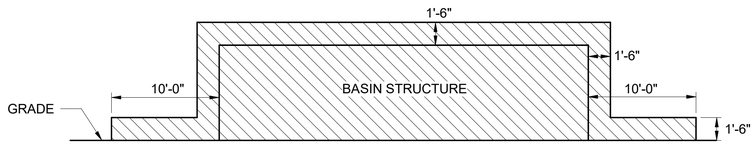

PRIMARY TREATMENT BASIN CLASSIFIED ENVELOPE
NOT TO SCALE

PARTIAL LEGEND

CLASS 1, DIVISION 1

CLASS 1, DIVISION 2

TABLE OF CORRESPONDING STRUCTURES

STRUCTURE NUMBER	STRUCTURE NAME
200	HEADWORKS
400	PROCESS BASINS
800	SOLIDS HOLDING

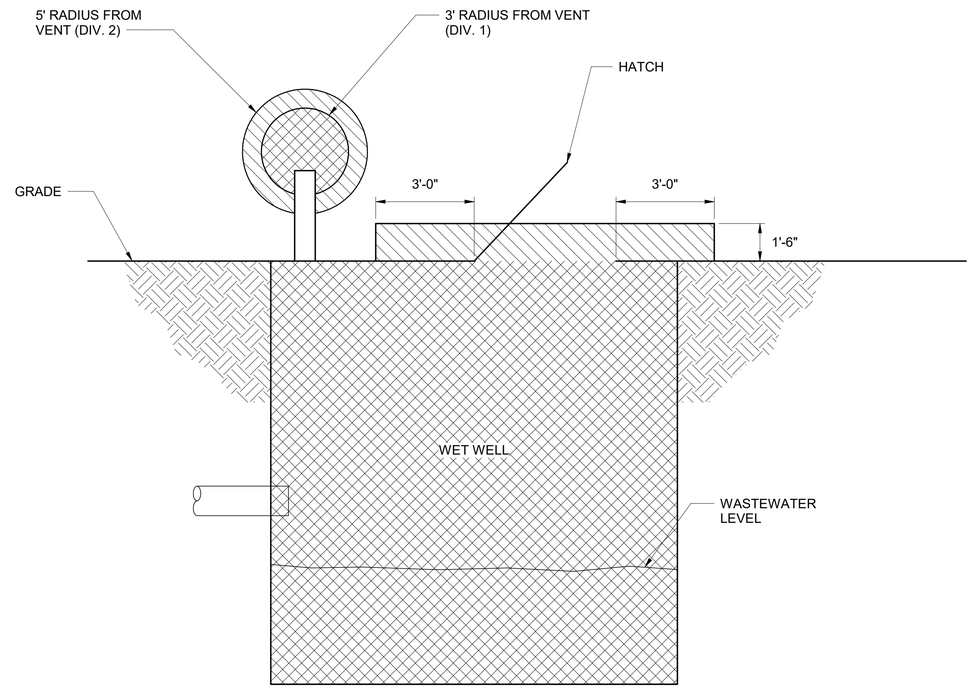

TYPICAL BELOW GRADE WET WELL OR BASIN CLASSIFIED ENVELOPE
NOT TO SCALE

PARTIAL LEGEND

CLASS 1, DIVISION 1

CLASS 1, DIVISION 2

TABLE OF WET WELL LOCATIONS

WET WELL AREA LOCATION NUMBER	WET WELL AREA LOCATION NAME
500	PROCESS BUILDING LOWER LEVEL

GEORGIA REGISTERED No. PE051936 PROFESSIONAL ENGINEER AKRAM FARIDI

06/26/2024

no.	date	by	ckd	description
0	6/24/26	AF	BEG	ISSUED FOR CONSTRUCTION

BURNS McDONNELL
4004 SUMMIT BLVD. NE, SUITE 1200
ATLANTA, GA 30319
770-587-4776
LICENSEE NO. PEF000100
AUTHORIZATION NO. J550903

date	detailed
10/12/23	A. LILLY
designed	**checked**
S. GILLIAM	B. GRAEBER

Perry
HOUSTON COUNTY, GEORGIA

EAST PERRY WWTF
AREA CLASSIFICATION DETAILS

project	contract
148538	

drawing **100E509** – rev. **0**

sheet of sheets

file

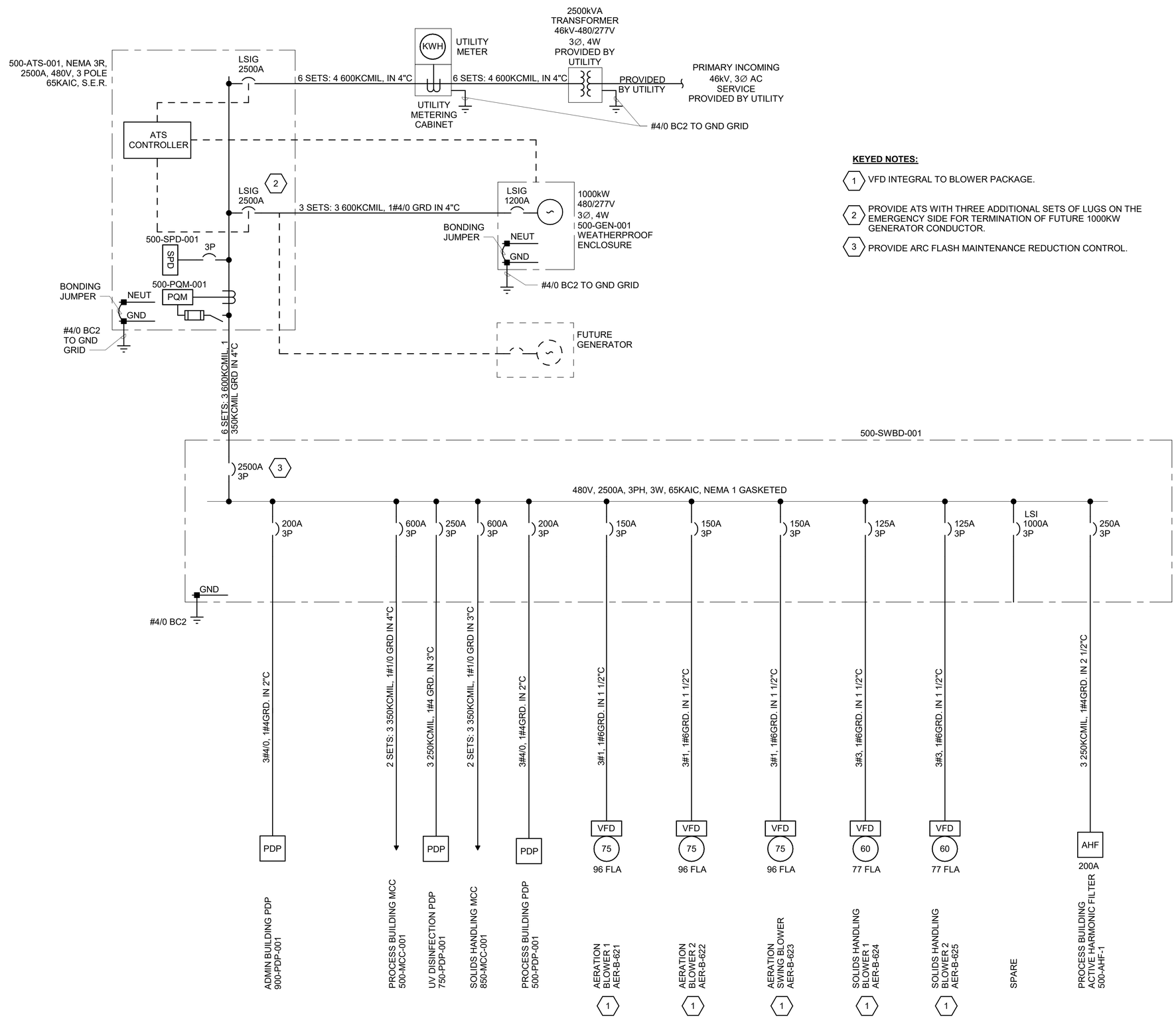

KEYED NOTES:

1. VFD INTEGRAL TO BLOWER PACKAGE.
2. PROVIDE ATS WITH THREE ADDITIONAL SETS OF LUGS ON THE EMERGENCY SIDE FOR TERMINATION OF FUTURE 1000KW GENERATOR CONDUCTOR.
3. PROVIDE ARC FLASH MAINTENANCE REDUCTION CONTROL.

500-SWBD-001 ONE-LINE DIAGRAM

no.	date	by	ckd	description
0	6/24/26	AF	BEG	ISSUED FOR CONSTRUCTION

BURNS McDONNELL
4004 SUMMIT BLVD. NE, SUITE 1200
ATLANTA, GA 30319
770-587-4776
LICENSEE NO. PEF000100
AUTHORIZATION NO. J550903

date	detailed
AUGUST 2023	S.GILLIAM
designed	**checked**
A.FARIDI	V.PATWARI

Perry

HOUSTON COUNTY, GEORGIA

GEORGIA REGISTERED No. PE051935 PROFESSIONAL ENGINEER AKRAM FARIDI

06/26/2024

EAST PERRY WWTF
500-SWBD-001 ONE-LINE DIAGRAM

project	contract
148538	

drawing **100E601** – rev. **0**

sheet of sheets

file

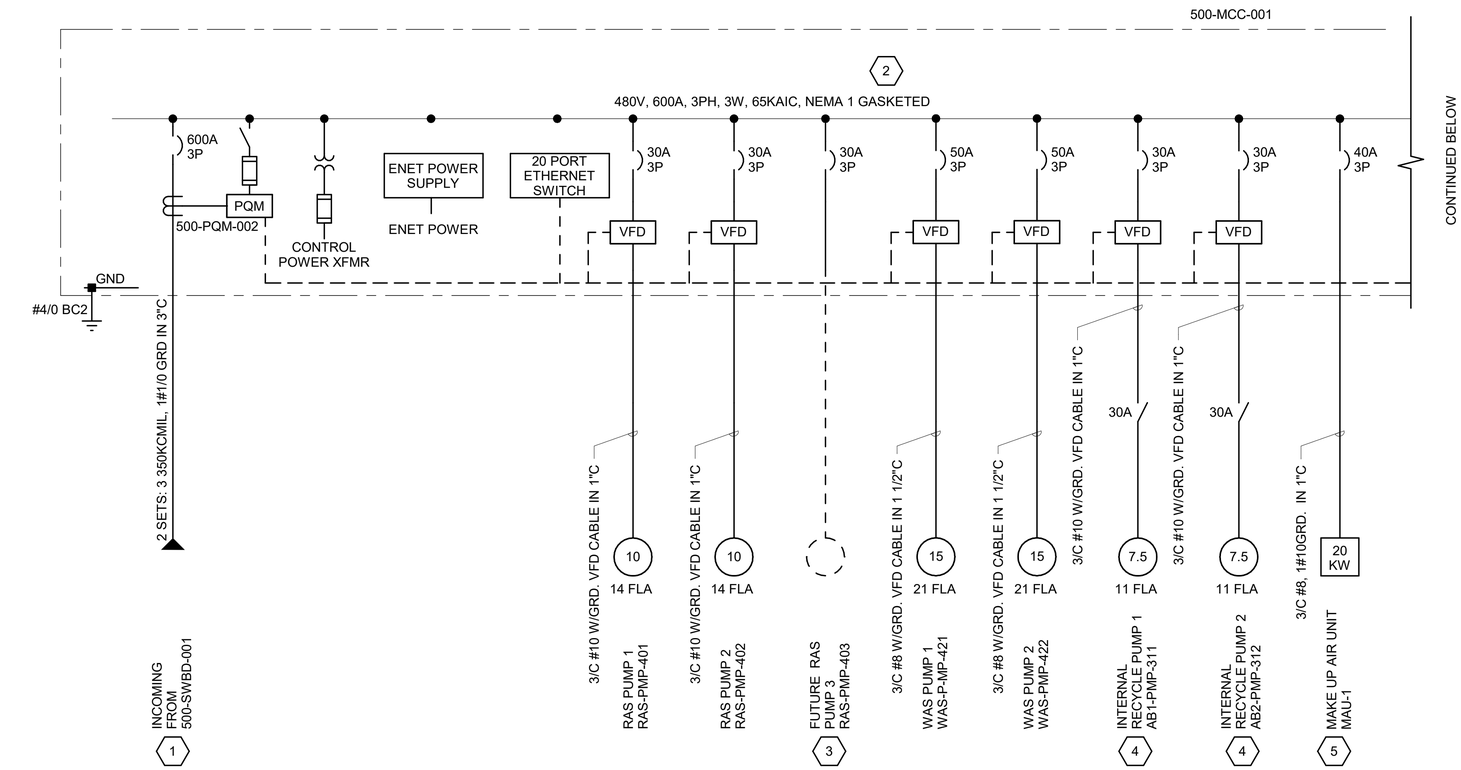

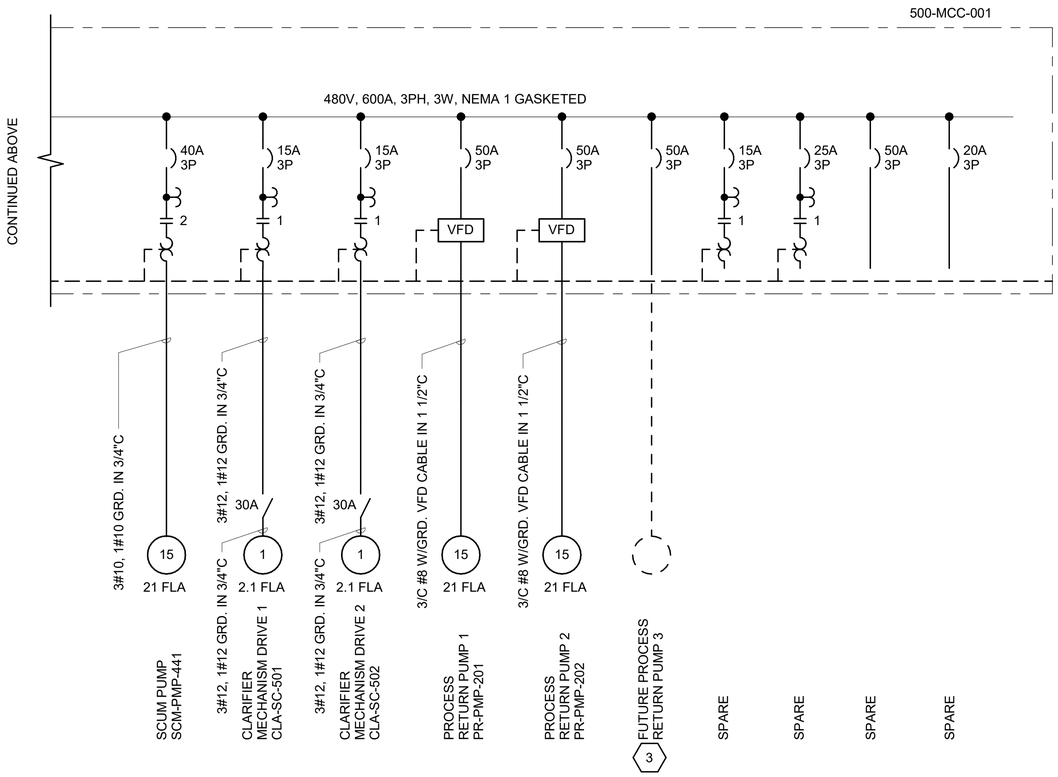

500-MCC-001 MOTOR CONTROL CENTER ONE-LINE DIAGRAM

KEYED NOTES:

1. INCOMING FEED FROM 500-SWBD-1 SHALL BE TOP ENTRY.
2. PROVIDE ETHERNET SWITCH TO COMMUNICATE WITH ALL VFD'S IN THE MCC.
3. PROVIDE BUCKET FOR FUTURE VFD.
4. PROVIDE MELTRIC SYTLE DISCONNECT.
5. DISCONNECT INTEGRAL TO UNIT.

no.	date	by	ckd	description
0	6/24/26	AF	BEG	ISSUED FOR CONSTRUCTION

BURNS McDONNELL
4004 SUMMIT BLVD. NE, SUITE 1200
ATLANTA, GA 30319
770-587-4776
LICENSEE NO. PEF000100
AUTHORIZATION NO. J550903

date	detailed
AUGUST 2023	S.GILLIAM
designed	**checked**
A.FARIDI	V.PATWARI

Perry
HOUSTON COUNTY, GEORGIA

GEORGIA REGISTERED No. PE051935 PROFESSIONAL ENGINEER AKRAM FARIDI
06/26/2024

EAST PERRY WWTF
500-MCC-001 ONE-LINE DIAGRAM

project	contract
148538	

drawing 100E602 – **rev.** 0

sheet of **sheets**

file

no.	date	by	ckd	description
0	6/24/26	AF	BEG	ISSUED FOR CONSTRUCTION

KEYED NOTES:

1. MOTOR STARTER INTEGRAL TO EQUIPMENT PACKAGE.
2. 60A, 3P EXTERNAL TIME-DELAY FUSE-PROTECTED DISCONNECT SWITCH

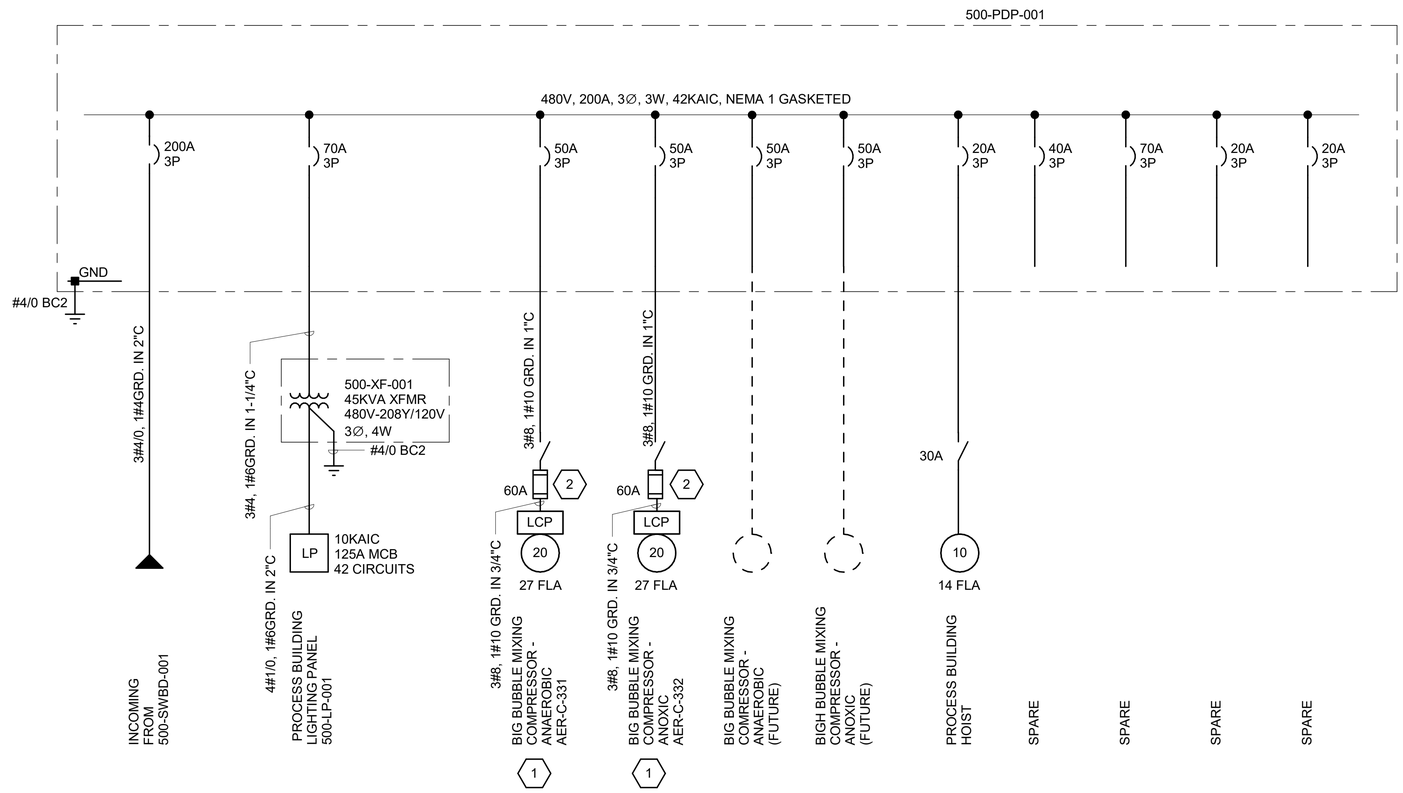

500-PDP-001 POWER DISTRIBUTION PANEL ONE-LINE DIAGRAM

GEORGIA REGISTERED No. PE051936 PROFESSIONAL ENGINEER AKRAM FARIDI

06/26/2024

BURNS McDONNELL
4004 SUMMIT BLVD. NE, SUITE 1200
ATLANTA, GA 30319
770-587-4776
LICENSEE NO. PEF000100
AUTHORIZATION NO. J550903

date	detailed
AUGUST 2023	S.GILLIAM
designed	**checked**
A.FARIDI	V.PATWARI

Perry

HOUSTON COUNTY, GEORGIA

EAST PERRY WWTF

500-PDP-001 ONE-LINE DIAGRAM

project	contract
148538	

drawing **100E603** – rev. **0**

sheet of sheets

file

GENERAL NOTES:

1. REFER TO SPECIFICATION SECTION "26 05 19 LOW VOLTAGE POWER CONDUCTORS AND CABLES" FOR ASSOCIATED CABLE SIZING INFORMATION.

2. MINIMUM CONDUIT SIZE IS 3/4"C. REFER TO SPECIFICATION SECTION "26 05 33 RACEWAYS, BOXES, SEALS, AND FITTINGS FOR ELECTRICAL SYSTEMS" FOR DETAILS.

500-LP-001 — ***PANEL SCHEDULE*** — **PROJECT: EAST PERRY, GA**

120/208V, 3Ph, 4W. 100A BUS — MCB — SURFACE MOUNTED NEMA 1 GASKETED — 11-Jun-24

CKT NO	DESCRIPTION/ LOCATION	LOAD (VA)	LOAD TYPE	CB AMP	CB POLE	PHASE	CB AMP	CB POLE	LOAD (VA)	LOAD TYPE	DESCRIPTION/ LOCATION	CKT NO
1	500-TCP-001	600	M	20	1	a	20	1	2,400	G	BBM MAIN CONTROL PANEL	2
3	400-MIX-001	1,920	G	20	1	b	20	1	3,750	M	DUCTLESS SPLIT SYSTEM	4
5	DUCTLESSS SPLIT SYSTEM	3,750	LM	20	1	c	20	1	2,400	L	PROCESS BASIN LIGHTING	6
7	500-MCP-001	1,920	G	20	1	a	20	1		G	500-NET-001	8
9	SPARE		G	20	1	b	20	1	2,400	G	SPARE	10
11	FLOW TRANSMITTER FIT-211	200	G	20	1	c	20	1	1,920	G	400-MIX-002	12
13	FLOW TRANSMITTER FIT-411	200	G	20	1	a	20	1	200	G	ANALYTICAL TRANSMITTER AIT-321	14
15	FLOW TRANSMITTER FIT-412	200	G	20	1	b	20	1	200	G	ANALYTICAL TRANSMITTER AIT-322	16
17	FLOW TRANSMITTER FIT-431	200	G	20	1	c	20	1	200	G	ANALYTICAL TRANSMITTER AIT-323	18
19	TF-PMP-752	1,200	G	20	1	a	20	1	200	G	ANALYTICAL TRANSMITTER AIT-324	20
21	ELECTRICAL ROOM LIGHITNG	200	L	20	1	b	20	1	200	G	ANALYTICAL TRANSMITTER AIT-325	22
23	ELECTRICAL ROOM RECEPTACLE	1,920	R	20	1	c	20	1	200	G	ANALYTICAL TRANSMITTER AIT-326	24
25	PROCESS ROOM LIGHTING	200	L	20	1	a	20	1	200	G	ANALYTICAL TRANSMITTER AIT-327	26
27	PROCESS ROOM RECEPTACLE	1,920	R	20	1	b	20	1	1,920	R	PROCESS BASIN RECEPTACLES	28
29	BASEMENT ROOM LIGHTING	200	L	20	1	c	20	1	1,920	R	PROCESS BASIN RECEPTACLES	30
31	BASEMENT ROOM RECEPTACLES	1,920	R	20	1	a	20	1	200	G	LEVEL TRANSMITTER LIT-221	32
33	BASEMENT ROOM RECEPTACLES	1,920	R	20	1	b	20	1	1,200	G	ALUM FEED SKID	34
35	OUTDOOR WALLPACK	200	L	20	1	c	20	1	1,200	M	AIR DRYER 1 EMX-DRY-1	36
37	LEVEL TRANSMITTER LIT-941	200	G	20	1	a	20	1	1,200	M	AIR DRYER 2 EMX-DRY-2	38
39	LEVEL TRANSMITTER LIT-942	200	G	20	1	b	20	1		M	EXHAUST EF-01	40
41	ANALYTICAL TRANSMITTER AIT-930	200	G	20	1	c	20	1		M	EXHAUST EF-02	42
43	CLARIFIER A RECEPTACLE	300	R	20	1	a	20	1	1,920	R	CLARIFIER B RECEPTACLE	44
45	PROCESS BUILDING HVAC CONTROL PANEL	600	G	20	1	b	20	2	1,920	L	SITE LIGHT	46
47	CLARIFIER A LIGHTING	500	L	20	1	c						48
49	CLARIFIER B LIGHTING	500	L	20	1	a	20	2			SPARE	50
51	OVERHEAD DOOR OPERATOR	500	L	20	1	b						52
53						c	20	2			SPARE	54
55						a						56
57						b	20	1			SPARE	58
59						c	20	1			SPARE	60
61						a	20	1			SPARE	62
63						b	20	1			SPARE	64
65						c	20	1			SPARE	66
67						a	20	1			SPARE	68
69						b	20	1			SPARE	70
71						c	20	1			SPARE	72
73						a	20	1			SPARE	74
75						b	20	1			SPARE	76
77						c	20	1			SPARE	78
79						a	20	1			SPARE	80
81							20	1			SPARE	82
												0

500-LP-001 PANEL SCHEDULE

no.	date	by	ckd	description
0	6/26/24	AF	BEG	ISSUED FOR CONSTRUCTION

BURNS McDONNELL
4004 SUMMIT BLVD. NE, SUITE 1200
ATLANTA, GA 30319
770-587-4776
LICENSEE NO. PEF000100
AUTHORIZATION NO. J550903

date	detailed
OCTOBER 23, 2023	A. LILLY
designed	checked
A. FARIDI	V.PATWARI

Perry

HOUSTON COUNTY, GEORGIA

EAST PERRY WWTF
500-LP-001 PANEL SCHEDULE

project 148538 — contract

drawing **100E604** — rev. **0**

sheet — of — sheets

file 148538_E604-500-LP-001-PANEL SCHEDULE.DW

GEORGIA REGISTERED No. PE051935 PROFESSIONAL ENGINEER AKRAM FARIDI

06/26/2024

PROFESSIONAL ENGINEER

no.	date	by	ckd	description
0	6/24/26	AF	BEG	ISSUED FOR CONSTRUCTION

KEYED NOTES:

1. CONDUIT FOR FUTURE FILTER EQUIPMENT SHALL BE CAPPED AT FUTURES STRUCTURE LOCATION SHOWN ON 100E100.
2. UNUSED PANELBOARD SPACE SHALL BE FILLED OUT WITH SPARE 20A, 3P BREAKERS.

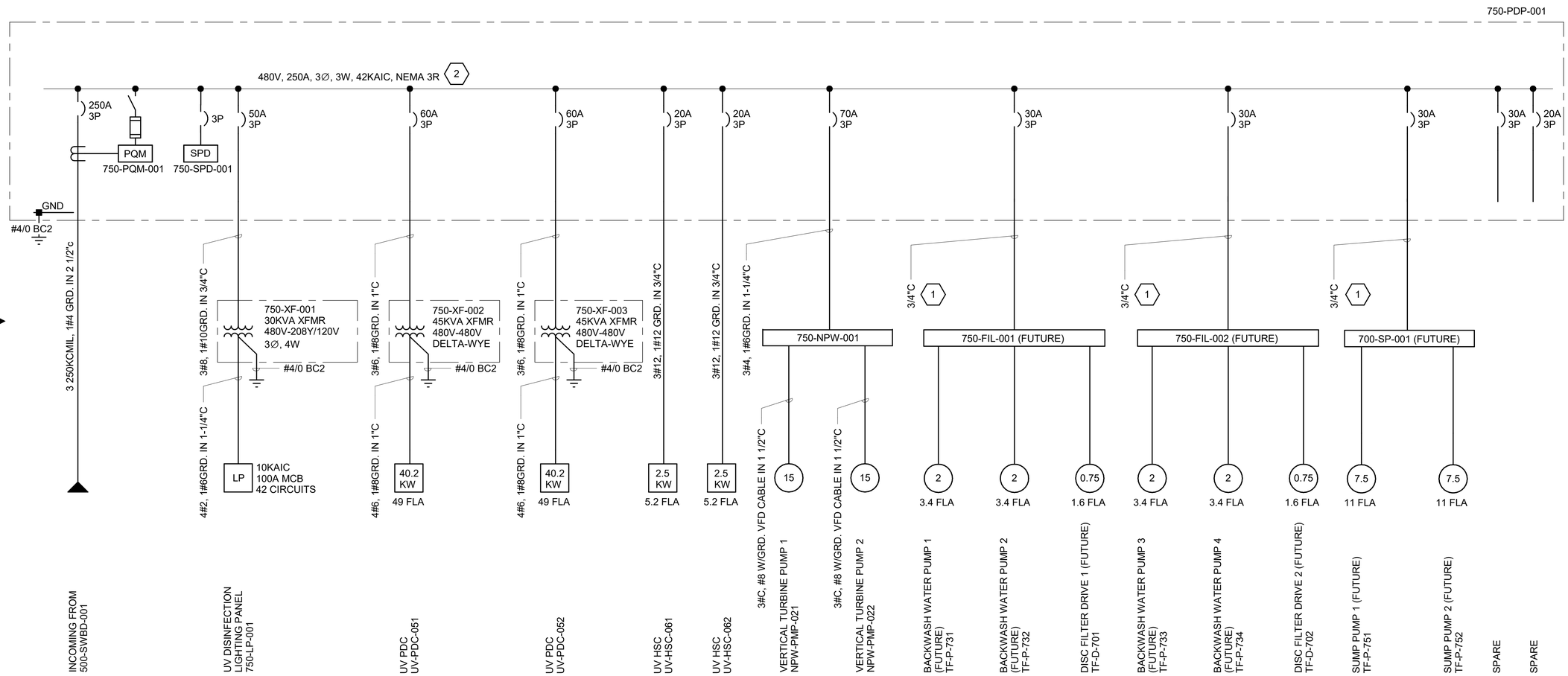

750-PDP-001 POWER DISTRIBUTION PANEL ONE-LINE DIAGRAM

GEORGIA REGISTERED No. PE051935 PROFESSIONAL ENGINEER AKRAM FARIDI

06/26/2024

BURNS McDONNELL
4004 SUMMIT BLVD. NE, SUITE 1200
ATLANTA, GA 30319
770-587-4776
LICENSEE NO. PEF000100
AUTHORIZATION NO. J550903

date	detailed
AUGUST 2023	S.GILLIAM
designed	**checked**
A.FARIDI	V.PATWARI

Perry

HOUSTON COUNTY, GEORGIA

EAST PERRY WWTF

750-PDP-001 ONE-LINE DIAGRAM

project	contract
148538	

drawing 100E605 – **rev.** 0

sheet **of** **sheets**

file

no.	date	by	ckd	description
0	6/26/24	AF	BEG	ISSUED FOR CONSTRUCTION

GENERAL NOTES:

1. REFER TO SPECIFICATION SECTION "26 05 19 LOW VOLTAGE POWER CONDUCTORS AND CABLES" FOR ASSOCIATED CABLE SIZING INFORMATION.
2. MINIMUM CONDUIT SIZE IS 3/4"C. REFER TO SPECIFICATION SECTION "26 05 33 RACEWAYS, BOXES, SEALS, AND FITTINGS FOR ELECTRICAL SYSTEMS" FOR DETAILS.

750-LP-001 | ***PANEL SCHEDULE*** | **PROJECT: EAST PERRY, GA**

120/208V, 3Ph, 4W. 100A BUS | M.L.O. | SURFACE MOUNTED NEMA 3R | 11-Jun-24

CKT NO	DESCRIPTION/ LOCATION	LOAD (VA)	LOAD TYPE	CB AMP	CB POLE	PHASE	CB AMP	CB POLE	LOAD (VA)	LOAD TYPE	DESCRIPTION/ LOCATION	CKT NO
1	EFFLUENT SAMPLER	600	LM	20	1	a	20	1	1,920	R	RECEPTACLES	2
3	LIGHTING	1,920	G	20	1	b	20	1	1,920	G	750-RIO-001	4
5	SYSTEM CONTROL CENTER 750-SCC-001	1,500	G	20	1	c	20	1	1,920	G	LEVEL SENSOR CONTROL BOX 750-LCP-001	6
7	FLOW TRANSMITTER FIT-001	200	G	20	1	a	20	1	1,920	G	LEVEL SENSOR CONTROL BOX 750-LCP-002	8
9	TERTIARY TREATMENT LIGHTS	315	L	20	1	b	20	1	1,920	R	TERTIARY TREATMENT RECEPTACLES	10
11	ANALYTICAL TRANSMITTER AIT-011	250	G	20	1	c	20	1	1,200	G	TF-P-753	12
13	ANALYTICAL TRANSMITTER AIT-012	250	G	20	1	a	20	1	200	G	FLOW TRANSMITTER FIT-002	14
15	ANALYTICAL TRANSMITTER AIT-013	250	G	20	1	b	20	1	210	L	UV DISINFECTION LIGHTING	16
17	SAMPLER UV-SAM-102	1,500	G	20	1	c	20	2	1,920	L	SITE PLAN	18
19	SPARE			20	1	a						20
21	SPARE			20	1	b	20	2			SPARE	22
23	SPARE			20	1	c						24
25	SPARE			20	1	a	20	1			SPARE	26
27	SPARE			20	1	b	20	1			SPARE	28
29	SPARE			20	1	c	20	1			SPARE	30
31						a	20	1			SPARE	32
33						b	20	1			SPARE	34
35						c	20	1			SPARE	36
37						a	20	1			SPARE	38
39						b	20	1			SPARE	40
41						c	20	1			SPARE	42

750-LP-001 PANEL SCHEDULE

GEORGIA REGISTERED No. PE051936 PROFESSIONAL ENGINEER AKRAM FARIDI

06/26/2024

PROFESSIONAL ENGINEER

BURNS McDONNELL
4004 SUMMIT BLVD. NE, SUITE 1200
ATLANTA, GA 30319
770-587-4776
LICENSEE NO. PEF000100
AUTHORIZATION NO. J550903

date	detailed
OCTOBER 23, 2023	A. LILLY
designed	checked
A. FARIDI	V.PATWARI

Perry

HOUSTON COUNTY, GEORGIA

EAST PERRY WWTF
750-LP-001 PANEL SCHEDULE

project 148538 | contract

drawing **100E606** – rev. **0**

sheet of sheets

file 148538_E606-750-LP-001-PANEL SCHEDULE.DWG

Z:\CLIENTS\WTR\PERRYGA\148538_EASTWWTP\DESIGN\CADD\ELEC\PROD_DWGS\148538_E606-750-LP-001-PANEL SCHEDULE.DWG 6/25/2024 10:54 AM BDBROCHUE

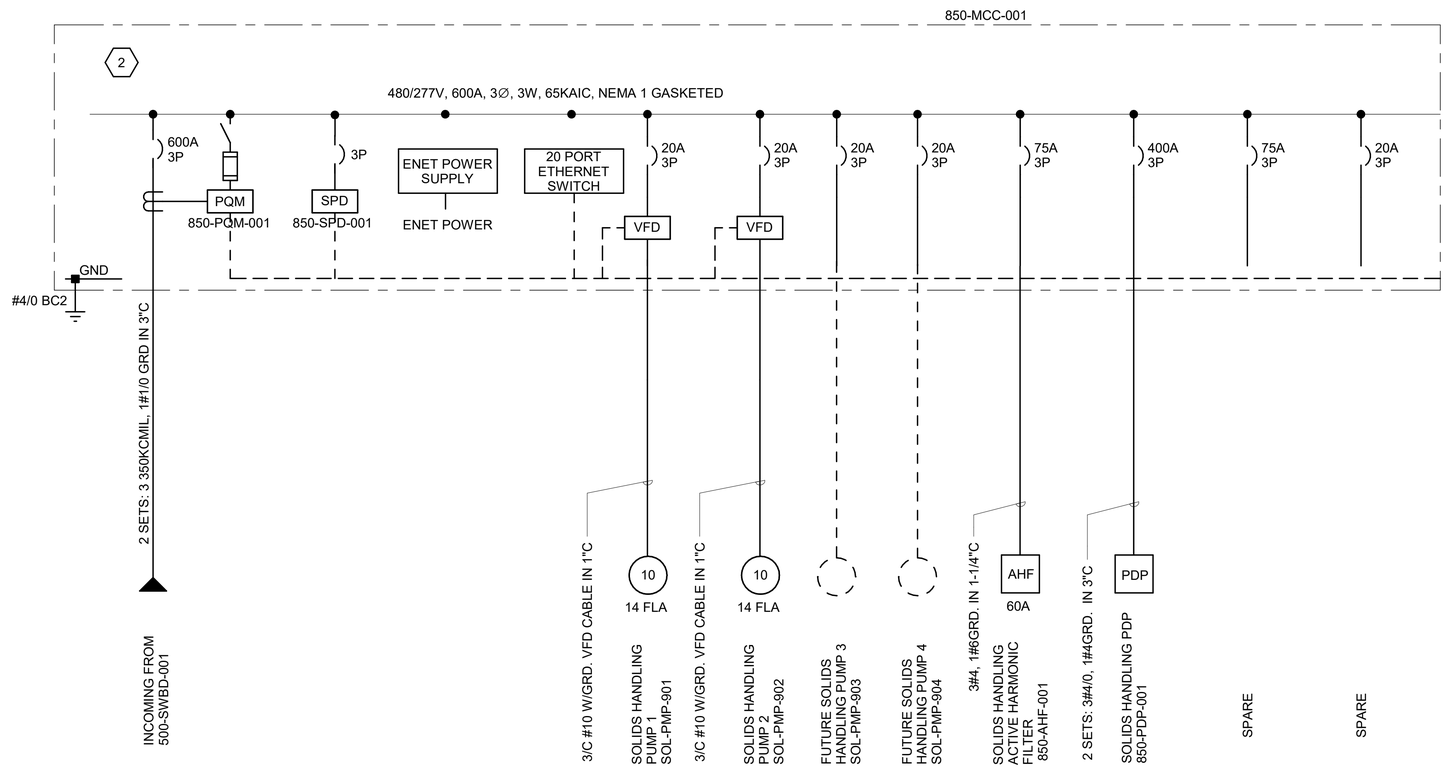

850-MCC-001 ONE LINE DIAGRAM

KEYED NOTES:

1. MOTOR STARTER INTEGRAL TO EQUIPMENT PACKAGE.
2. PROVIDE ETHERNET SWITCH TO COMMUNICATE WITH ALL VFD'S IN THE MCC
3. PROVIDE SPACE FOR TWO VFD BUICKETS.

no.	date	by	ckd	description
0	6/24/26	AF	BEG	ISSUED FOR CONSTRUCTION

BURNS McDONNELL
4004 SUMMIT BLVD. NE, SUITE 1200
ATLANTA, GA 30319
770-587-4776
LICENSEE NO. PEF000100
AUTHORIZATION NO. J550903

date	detailed
AUGUST 2023	S.GILLIAM
designed	**checked**
A.FARIDI	V.PATWARI

Perry

HOUSTON COUNTY, GEORGIA

GEORGIA REGISTERED No. PE051935 PROFESSIONAL ENGINEER AKRAM FARIDI

06/26/2024

EAST PERRY WWTF

850-MCC-1 ONE-LINE DIAGRAM

project	contract
148538	

drawing **100E607** – rev. **0**

sheet of sheets

file

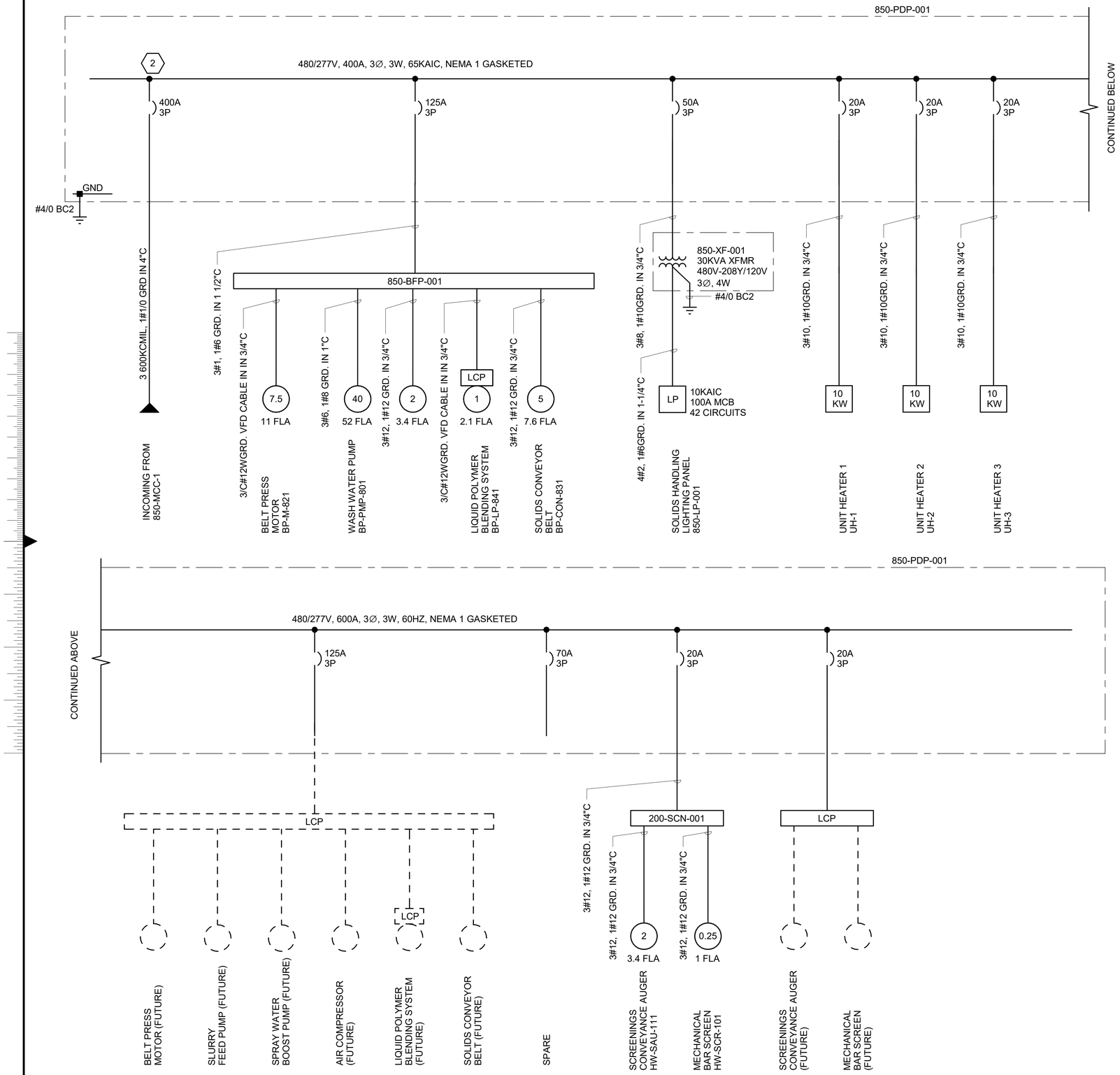

850-PDP-001 ONE-LINE DIAGRAM

KEYED NOTES:

1. MOTOR STARTER INTEGRAL TO EQUIPMENT PACKAGE.
2. UNUSED PANELBOARD SPACE BE FILLED OUT WITH SPARE 20A 3P BREAKERS.

no.	date	by	ckd	description
0	6/24/26	AF	BEG	ISSUED FOR CONSTRUCTION

BURNS McDONNELL
4004 SUMMIT BLVD. NE, SUITE 1200
ATLANTA, GA 30319
770-587-4776
LICENSEE NO. PEF000100
AUTHORIZATION NO. J550903

date	detailed
AUGUST 2023	S.GILLIAM
designed	**checked**
A.FARIDI	V.PATWARI

Perry

HOUSTON COUNTY, GEORGIA

GEORGIA REGISTERED No. PE051936 PROFESSIONAL ENGINEER AKRAM FARIDI

06/26/2024

EAST PERRY WWTF

850-PDP-001 ONE-LINE DIAGRAM

project	contract
148538	

drawing **100E608** – rev. **0**

sheet of sheets

file

no.	date	by	ckd	description
0	6/26/24	AF	BEG	ISSUED FOR CONSTRUCTION

GENERAL NOTES:

1. REFER TO SPECIFICATION SECTION "26 05 19 LOW VOLTAGE POWER CONDUCTORS AND CABLES" FOR ASSOCIATED CABLE SIZING INFORMATION.
2. MINIMUM CONDUIT SIZE IS 3/4"C. REFER TO SPECIFICATION SECTION "26 05 33 RACEWAYS, BOXES, SEALS, AND FITTINGS FOR ELECTRICAL SYSTEMS" FOR DETAILS.

850-LP-001 ***PANEL SCHEDULE*** **PROJECT: EAST PERRY, GA**

120/208V, 3Ph, 4W. 100A BUS M.L.O. SURFACE MOUNTED NEMA 1 GASKETED 25-Jun-24

CKT NO	DESCRIPTION/ LOCATION	LOAD (VA)	LOAD TYPE	CB AMP	CB POLE	PHASE	CB AMP	CB POLE	LOAD (VA)	LOAD TYPE	DESCRIPTION/ LOCATION	CKT NO
1	SOLIDS HANDLING ROOM LIGHTING	595	L	20	1	a	20	1	130	L	ELECTRICAL ROOM LIGHTING	2
3	SOLIDS HANDLING ROOM RECEPTACLES	1,920	G	20	1	b	20	1	1,920	L	ELECTRICAL ROOM RECEPTACLES	4
5	FLOW TRANSMITTER FIT-921	200	G	20	1	c	20	1	35	L	DUMPSTER AREA LIGHTING	6
7	FLOW TRANSMITTER FIT-811	200	G	20	1	a	20	1	120	L	OUTDOOR WALL PACKS	8
9	SAMPLER HW-SAM-101	1,500	G	20	1	b	20	1	1,920	M	EXHAUST FAN EF-3	10
11	ANALYTICAL TRANSMITTER AIT-931	200	G	20	1	c	20	1	1,920	M	EXHAUST FAN EF-4	12
13	ANALYTICAL TRANSMITTER AIT-932	200	G	20	1	a	25	2	3,000	M	ELECTRICAL ROOM AC OUTDOOR UNIT HP-02	14
15	850-RIO-001	250	G	20	1	b						16
17	WATER HEATER DWH-2	4,500	H	30	1	c	20	1	3,000	H	WATER HEATER DWH-3	18
19	LEVEL TRANSMITTER LIT-941	200	G	20	1	a	20	1	500		850-FACP-001	20
21	LEVEL TRANSMITTER LIT-942	200	G	20	1	b	20	1			SPARE	22
23	FLOW TRANSMITTER FIT-721	200	G	20	1	c	20	2	1,920	L	SITE LIGHT	24
25	SOLIDS BUILDING HVAC CONTROL PANEL	600	G	20	1	a						26
27	OVERHEAD DOOR OPERATOR	500	G	20	1	b	20	2			SPARE	28
29	SPARE			20	1	c						30
31	SPARE			20	1	a	20	1			SPARE	32
33	SPARE			20	1	b	20	1			SPARE	34
35						c	20	1			SPARE	36
37						a	20	1			SPARE	38
39						b	20	1			SPARE	40
41						c	20	1			SPARE	42

850-LP-001 PANEL SCHEDULE

GEORGIA REGISTERED No. PE051936 PROFESSIONAL ENGINEER AKRAM FARIDI

06/26/2024

PROFESSIONAL ENGINEER

BURNS McDONNELL
4004 SUMMIT BLVD. NE, SUITE 1200
ATLANTA, GA 30319
770-587-4776
LICENSEE NO. PEF000100
AUTHORIZATION NO. J550903

date	detailed
OCTOBER 23, 2023	A. LILLY
designed	checked
A. FARIDI	V.PATWARI

Perry

HOUSTON COUNTY, GEORGIA

EAST PERRY WWTF
850-LP-001 PANEL SCHEDULE

project 148538 | contract

drawing **100E609 –** rev. **0**

sheet of sheets

file 148538_E609-850-LP-001-PANEL SCHEDULE.DWG

Z:\CLIENTS\WTR\PERRYGA\148538_EASTWWTP\DESIGN\CADD\ELEC\PROD_DWGS\148538_E609-850-LP-001-PANEL SCHEDULE.DWG 6/25/2024 10:55 AM BDBROCHUE

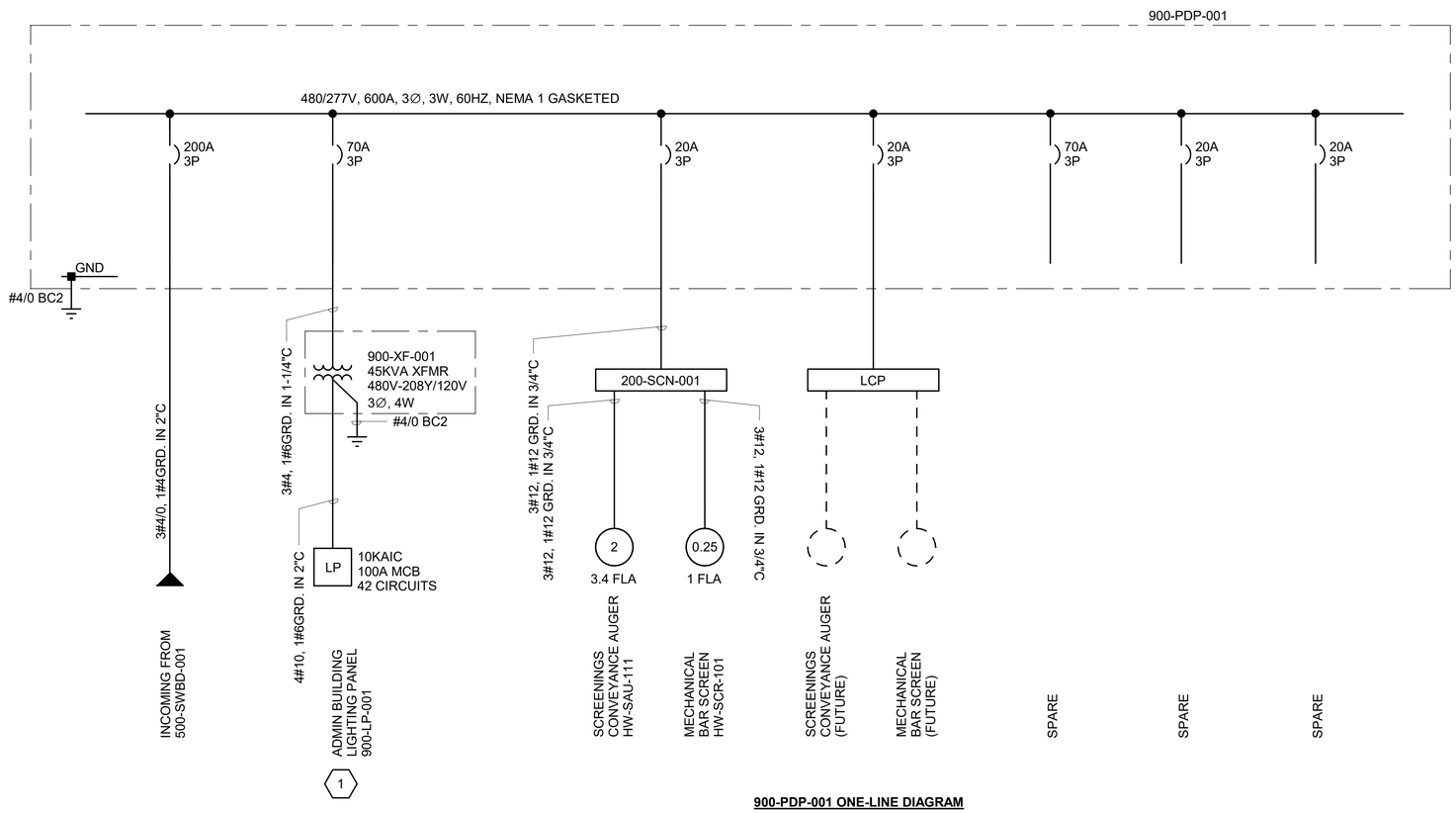

900-PDP-001 ONE-LINE DIAGRAM

KEYED NOTES:

1. ALL 120/208V LOADS IN ADMIN BUILDING SHALL BE POWERED OUT OF 900-LP-001. COORDINATE WITH ADMIN BUILDING MANUFACTURER AS REQUIRED.

no.	date	by	ckd	description
0	6/24/26	AF	BEG	ISSUED FOR CONSTRUCTION

BURNS McDONNELL
4004 SUMMIT BLVD. NE, SUITE 1200
ATLANTA, GA 30319
770-587-4776
LICENSEE NO. PEF000100
AUTHORIZATION NO. J550903

date	detailed
05/03/24	Author
designed	**checked**
Designer	Checker

Perry

HOUSTON COUNTY, GEORGIA

EAST PERRY WWTF

900-PDP-001 ONE-LINE DIAGRAM

GEORGIA REGISTERED No. PE051935 PROFESSIONAL ENGINEER AKRAM FARIDI

06/26/2024

project	contract
148538	

drawing 100E610 – **rev.** 0

sheet of **sheets**

file

Scale For Microfilming: Millimeters / Inches

no.	date	by	ckd	description
0	6/26/24	AF	BEG	ISSUED FOR CONSTRUCTION

GENERAL NOTES:

1. REFER TO SPECIFICATION SECTION "26 05 19 LOW VOLTAGE POWER CONDUCTORS AND CABLES" FOR ASSOCIATED CABLE SIZING INFORMATION.
2. MINIMUM CONDUIT SIZE IS 3/4"C. REFER TO SPECIFICATION SECTION "26 05 33 RACEWAYS, BOXES, SEALS, AND FITTINGS FOR ELECTRICAL SYSTEMS" FOR DETAILS.

900-LP-001 | ***PANEL SCHEDULE*** | **PROJECT: EAST PERRY, GA**

120/208V, 3Ph, 4W | 100A BUS | M.L.O | SURFACE MOUNTED NEMA 1 GASKETED | 3-May-24

CKT NO	DESCRIPTION/ LOCATION	LOAD (VA)	LOAD TYPE	CB AMP	CB POLE	PHASE	CB AMP	CB POLE	LOAD (VA)	LOAD TYPE	DESCRIPTION/ LOCATION	CKT NO
1	INFLUENT AUTOSAMPLER	595	L	20	1	a	20	1	130	L	ELECTRICAL ROOM LIGHTING	2
3	HEADWORKS STR. LIGHTING	1,920	G	20	1	b	20	1	1,920	L	ELECTRICAL ROOM RECEPTACLES	4
5	HEADWORKS STR. RECEPTACLE	1,920	G	20	1	c	20	1	35	L	DUMPSTER AREA LIGHTING	6
7						a	20	1	120	L	OUTDOOR WALL PACKS	8
9						b	20	1	1,920	M	EXHAUST FAN EF-3	10
11						c	20	1	1,920	M	EXHAUST FAN EF-4	12
13						a	25	2	3,000	M	ELECTRICAL ROOM AC OUTDOOR UNIT HP-02	14
15						b						16
17						c	20	1	3,000	H	WATER HEATER DWH-3	18
19						a	20	1			SPARE	20
21						b	20	1			SPARE	22
23						c	20	2	1,920	L	SITE LIGHT	24
25						a						26
27						b	20	2			SPARE	28
29						c						30
31						a	20	1			SPARE	32
33						b	20	1			SPARE	34
35						c	20	1			SPARE	36
37						a	20	1			SPARE	38
39						b	20	1			SPARE	40
41						c	20	1			SPARE	42

900-LP-001 PANEL SCHEDULE

GEORGIA REGISTERED No. PE051935 PROFESSIONAL ENGINEER AKRAM FARIDI

06/26/2024

PROFESSIONAL ENGINEER

BURNS McDONNELL
4004 SUMMIT BLVD. NE, SUITE 1200
ATLANTA, GA 30319
770-587-4776
LICENSEE NO. PEF000100
AUTHORIZATION NO. J550903

date	detailed
OCTOBER 23, 2023	A. LILLY
designed	checked
A. FARIDI	V.PATWARI

Perry

HOUSTON COUNTY, GEORGIA

EAST PERRY WWTF

900-LP-001 PANEL SCHEDULE

project 148538 | contract

drawing **100E611** – rev. **0**

sheet of sheets

file 148538_E611-900-LP-001-PANEL SCHEDULE.DWG

Z:\CLIENTS\WTR\PERRYGA\148538_EASTWWTP\DESIGN\CADD\ELEC\PROD_DWGS\148538_E611-900-LP-001-PANEL SCHEDULE.DWG 6/25/2024 10:55 AM BDBROCHUE

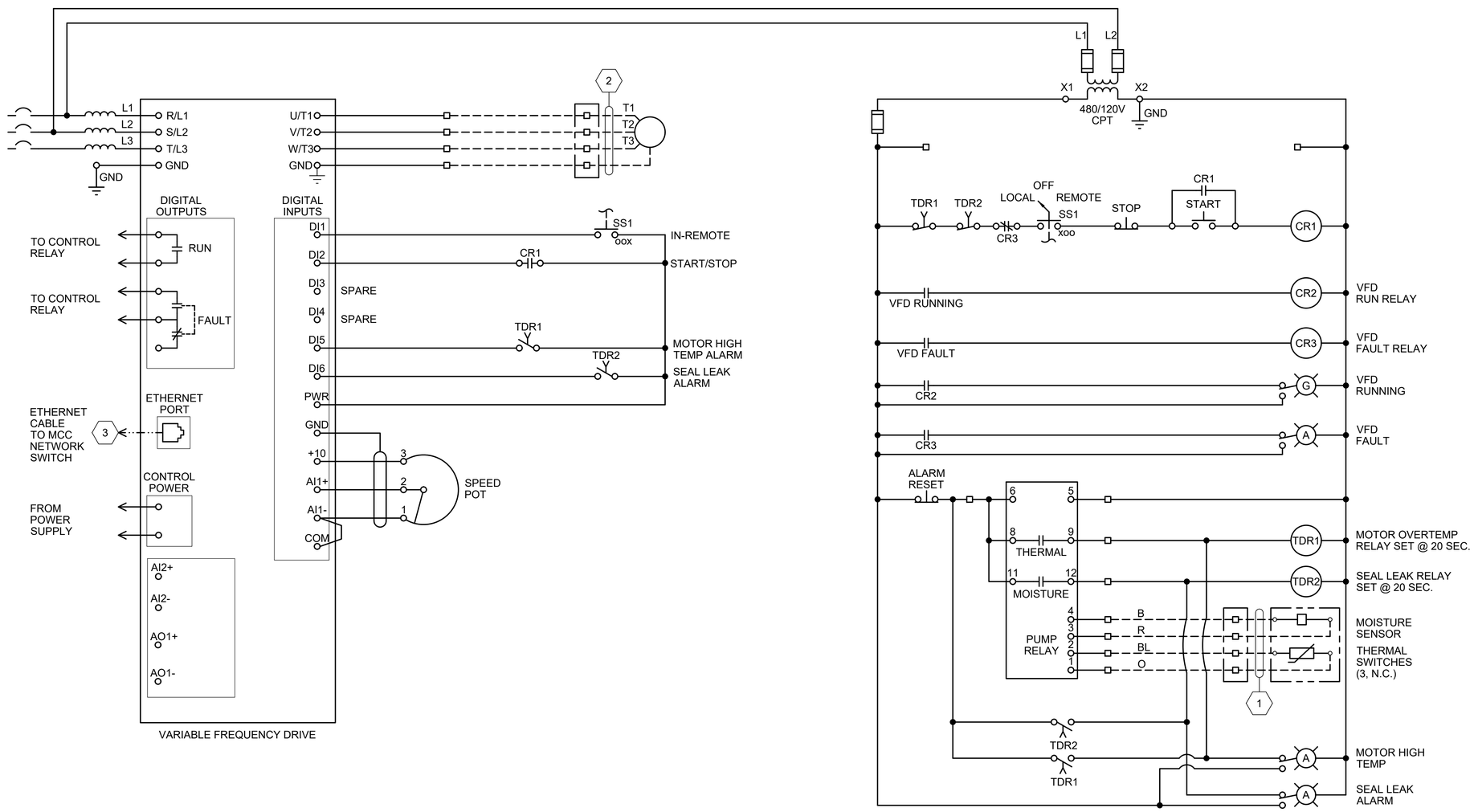

TABLE OF CORRESPONDING DEVICES AND CIRCUITS					
EQUIPMENT	MOTOR CONTROL CENTER	DEVICES		CIRCUITS	
AB1-PMP-311	500-MCC-001	AB1-VFD-311	AB1-ME/TE-311	C-AB1-VFD311-01,02,03,04	T-AB1-VFD311-01
AB2-PMP-312	500-MCC-001	AB2-VFD-312	AB2-ME/TE-312	C-AB2-VFD312-01,02,03,04	T-AB2-VFD312-01

GENERAL NOTE:

1. REFER TO SPECIFICATION SECTION 40 61 96-CONTROL DESCRIPTION AND SYSTEM PROGRAMMING FOR DESCRIPTION OF OPERATION AND I/O POINTS TO BE INTEGRATED INTO THE PLANT CONTROL SYSTEM.

KEYED NOTES:

1. MONITORING UNIT, MOISTURE SENSORS, AND THERMAL SENSORS ARE PROVIDED BY THE PUMP MANUFACTURER. INSTALL MONITORING UNIT IN THE VFD ENCLOSURE/MCC BUCKET AND COORDINATE WITH THE PUMP MANUFACTURER FOR INTEGRATION OF SENSORS AND FINAL TERMINATIONS. INSTALL AND LABEL MONITORING LIGHTS ON THE FACE OF THE VFD UNIT AS INDICATED.
2. CABLE SUPPLIED BY PUMP MANUFACTURER.
3. SIGNALS VIA ETHERNET CONNECTION:
   MOTOR RUNNING TO PLC
   VFD FAULT TO PLC
   IN-REMOTE TO PLC
   MOTOR HIGH TEMPERATURE TO PLC
   SPEED CONTROL FROM PLC
   SPEED INDICATION TO PLC
   START/STOP FROM PLC

TYPICAL SUBMERSIBLE PUMP VARIABLE FREQUENCY DRIVE DIAGRAM

GEORGIA REGISTERED No. PE061936 PROFESSIONAL ENGINEER AKRAM FARIDI

06/26/2024

no.	date	by	ckd	description
0	6/26/24	AF	BEG	ISSUED FOR CONSTRUCTION

BURNS McDONNELL
4004 SUMMIT BLVD. NE, SUITE 1200
ATLANTA, GA 30319
770-587-4776
LICENSEE NO. PEF000100
AUTHORIZATION NO. J550903

date	detailed
NOVEMBER 13, 2023	S. GILLIAM
designed	checked
S. GILLIAM	B. GRAEBER

Perry
HOUSTON COUNTY, GEORGIA

EAST PERRY WWTF
SUBMERSIBLE PUMP VFD SCHEMATIC

project 148538
contract
drawing **100E614** – rev. **0**
sheet of sheets
file 148538_100E614 - SUBMERSIBLE PUMP VFD SC

Z:\CLIENTS\WTR\PERRYGA\148538_EASTWWTP\DESIGN\CADD\ELEC\PROD_DWGS\SCHEMATICS\148538_100E614 - SUBMERSIBLE PUMP VFD SCHEMATIC.DWG 6/25/2024 10:59 AM BDBROCHUE

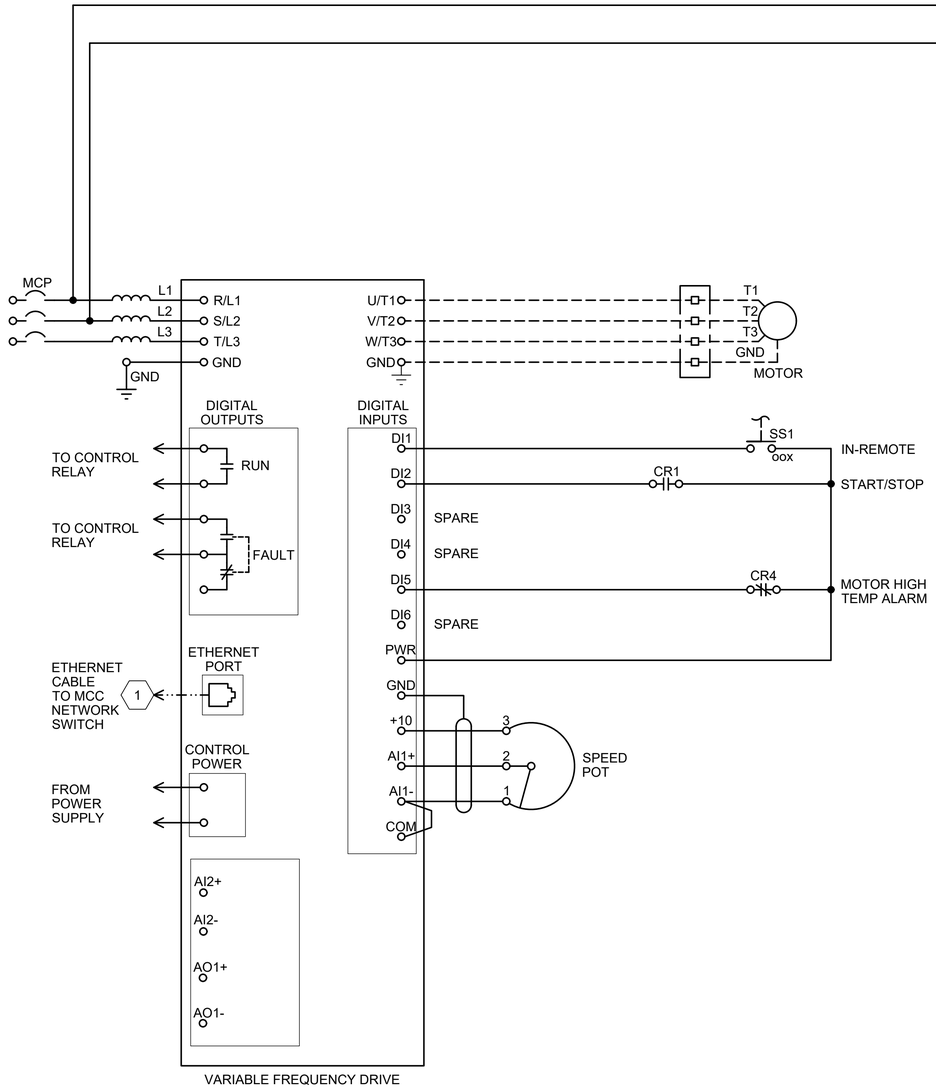

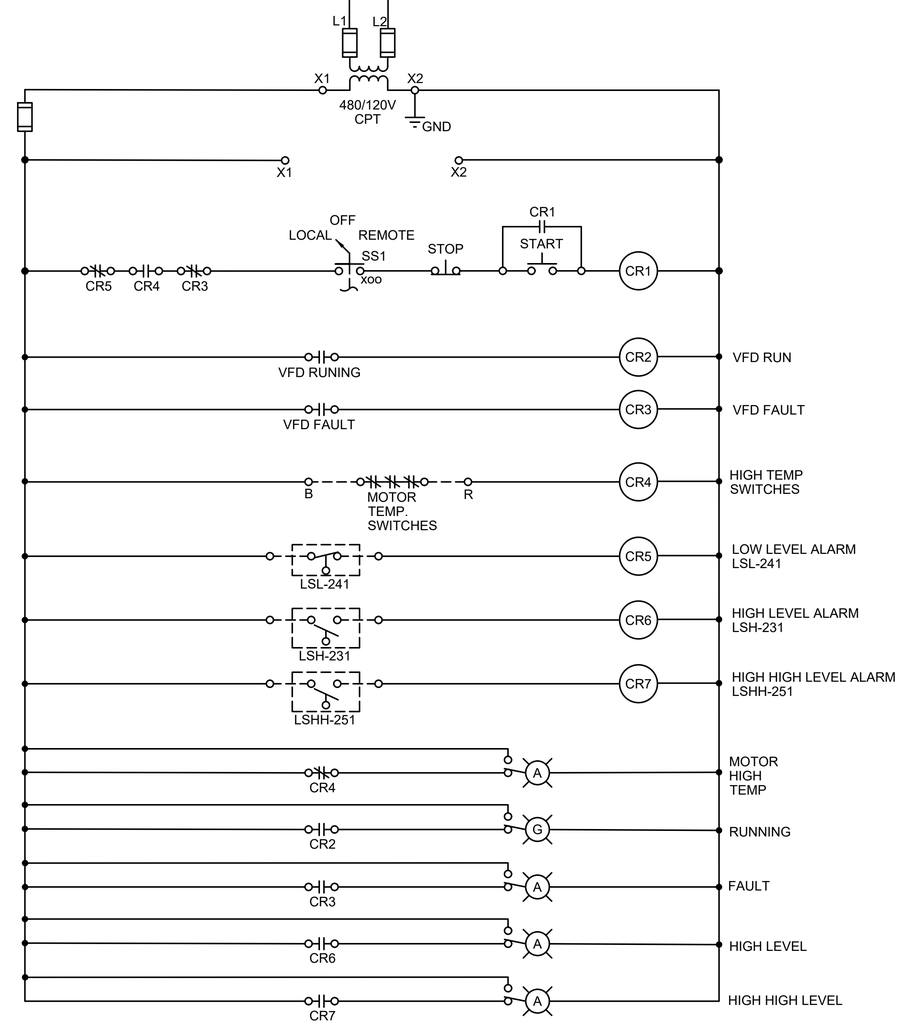

GENERAL NOTE:

1. REFER TO SPECIFICATION SECTION 40 61 96-CONTROL DESCRIPTION AND SYSTEM PROGRAMMING FOR DESCRIPTION OF OPERATION AND I/O POINTS TO BE INTEGRATED INTO THE PLANT CONTROL SYSTEM.

KEYED NOTES:

1. SIGNALS VIA ETHERNET CONNECTION:
   MOTOR RUNNING TO PLC
   VFD FAULT TO PLC
   IN-REMOTE TO PLC
   MOTOR HIGH TEMPERATURE TO PLC
   SPEED CONTROL FROM PLC
   SPEED INDICATION TO PLC
   START/STOP FROM PLC
   HIGH-HIGH LEVEL TO PLC
   HIGH LEVEL TO PLC
   LOW LEVEL TO PLC

TABLE OF CORRESPONDING DEVICES AND CIRCUITS

EQUIPMENT	MOTOR CONTROL CENTER	MOTOR TEMP SWITCHES	LEVEL SWITCHES	CIRCUITS	
PR-PMP-201	500-MCC-001	YES	YES	C-PR-VFD201-01,02,03,04	T-PR-VFD201-01
PR-PMP-202	500-MCC-001	YES	YES	C-PR-VFD202-01,02,03,04	T-PR-VFD202-01

TYPICAL CENTRIFUGAL PUMP VARIABLE FREQUENCY DRIVE DIAGRAM

GEORGIA REGISTERED No. PE051935 PROFESSIONAL ENGINEER AKRAM FARIDI

06/26/2024

no.	date	by	ckd	description
0	6/26/24	AF	BEG	ISSUED FOR CONSTRUCTION

BURNS McDONNELL
4004 SUMMIT BLVD. NE, SUITE 1200
ATLANTA, GA 30319
770-587-4776
LICENSEE NO. PEF000100
AUTHORIZATION NO. J550903

date	detailed
NOVEMBER 5, 2023	S. GILLIAM
designed	checked
S. GILLIAM	B. GRAEBER

Perry
HOUSTON COUNTY, GEORGIA

EAST PERRY WWTF
CENTRIFUGAL PUMP VFD
SCHEMATIC

project 148538
contract
drawing **100E615** – rev. **0**
sheet of sheets
file 148538_100E615 - CENTRIFUGAL PUMP VFD SC

Z:\CLIENTS\WTR\PERRYGA\148538_EASTWWTP\DESIGN\CADD\ELEC\PROD_DWGS\SCHEMATICS\148538_100E615 - CENTRIFUGAL PUMP VFD SCHEMATIC.DWG 6/25/2024 10:57 AM BDBROCHUE

no.	date	by	ckd	description
0	6/26/24	AF	BEG	ISSUED FOR CONSTRUCTION

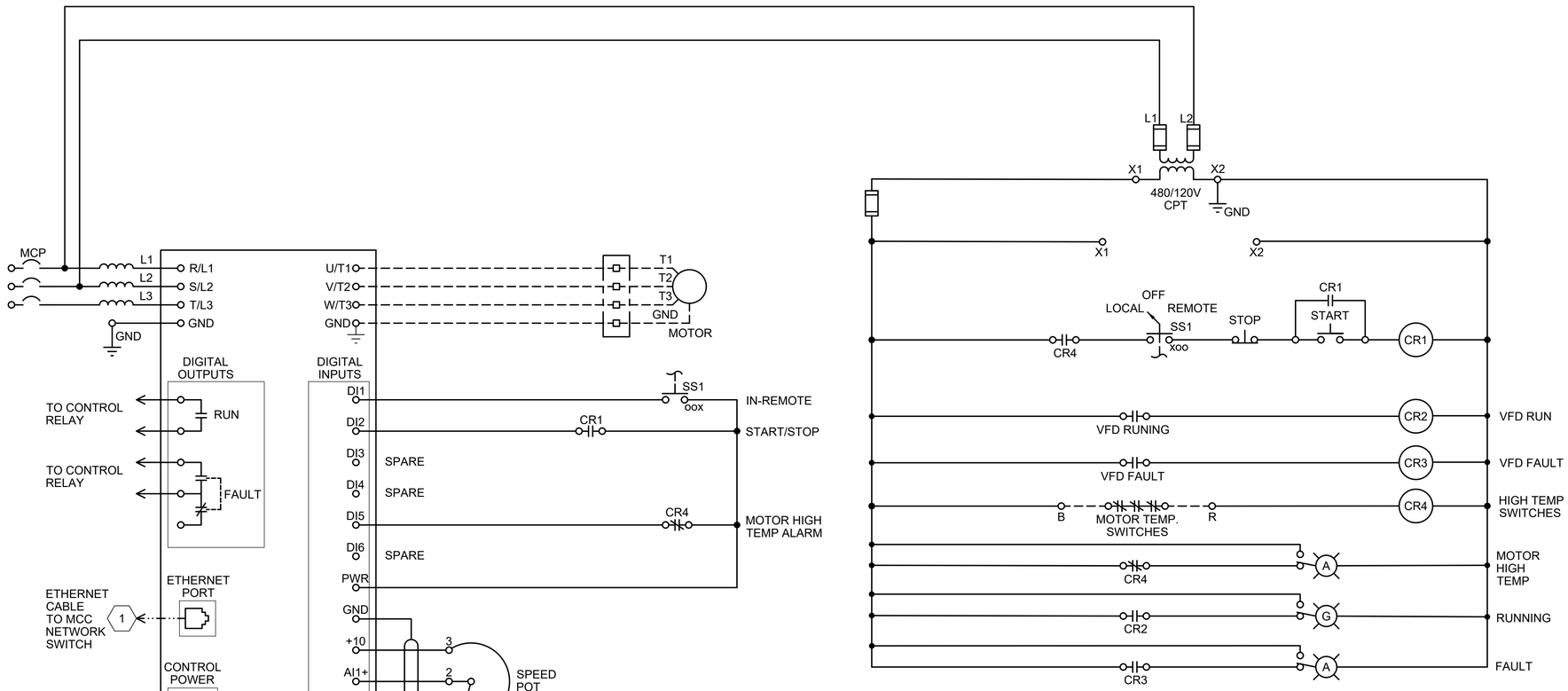

GENERAL NOTE:

1. REFER TO SPECIFICATION SECTION 40 61 96-CONTROL DESCRIPTION AND SYSTEM PROGRAMMING FOR DESCRIPTION OF OPERATION AND I/O POINTS TO BE INTEGRATED INTO THE PLANT CONTROL SYSTEM.

KEYED NOTES:

1. SIGNALS VIA ETHERNET CONNECTION:
   MOTOR RUNNING TO PLC
   VFD FAULT TO PLC
   IN-REMOTE TO PLC
   MOTOR HIGH TEMPERATURE TO PLC
   SPEED CONTROL FROM PLC
   SPEED INDICATION TO PLC
   START/STOP FROM PLC

TABLE OF CORRESPONDING DEVICES AND CIRCUITS

EQUIPMENT	MOTOR CONTROL CENTER	MOTOR TEMP SWITCHES	LEVEL SWITCHES	CIRCUITS	
RAS-PMP-401	500-MCC-001	YES	NO	C-RAS-VFD401-01,02,03,04	T-RAS-VFD401-01
RAS-PMP-402	500-MCC-001	YES	NO	C-RAS-VFD402-01,02,03,04	T-RAS-VFD402-01

TYPICAL CENTRIFUGAL PUMP VARIABLE FREQUENCY DRIVE DIAGRAM

GEORGIA REGISTERED No. PE051935 PROFESSIONAL ENGINEER AKRAM FARIDI

06/26/2024

BURNS McDONNELL
4004 SUMMIT BLVD. NE, SUITE 1200
ATLANTA, GA 30319
770-587-4776
LICENSEE NO. PEF000100
AUTHORIZATION NO. J550903

date	detailed
NOVEMBER 5, 2023	S. GILLIAM
designed	checked
S. GILLIAM	B. GRAEBER

Perry

HOUSTON COUNTY, GEORGIA

EAST PERRY WWTF
CENTRIFUGAL PUMP VFD
SCHEMATIC

project 148538 | contract

drawing **100E616** – rev. **0**

sheet of sheets

file 148538_100E616 - CENTRIFUGAL PUMP VFD SC

Z:\CLIENTS\WTR\PERRYGA\148538_EASTWWTP\DESIGN\CADD\ELEC\PROD_DWGS\SCHEMATICS\148538_100E616 - CENTRIFUGAL PUMP VFD SCHEMATIC.DWG 6/25/2024 10:58 AM BDBROCHUE

GENERAL NOTE:

1. REFER TO SPECIFICATION SECTION 40 61 96 - PROCESS CONTROL SOFTWARE PROGRAMMING AND REPORTS FOR DESCRIPTION OF OPERATION AND I/O POINTS TO BE INTEGRATED INTO THE PLANT CONTROL SYSTEM.

KEYED NOTES:

1. SIGNALS VIA ETHERNET CONNECTION:
   MOTOR RUNNING TO PLC
   FAULT TO PLC
   IN-REMOTE TO PLC
   MOTOR HIGH TEMPERATURE TO PLC
   LOW PRESSURE
   HIGH PRESSURE
   START/STOP FROM PLC

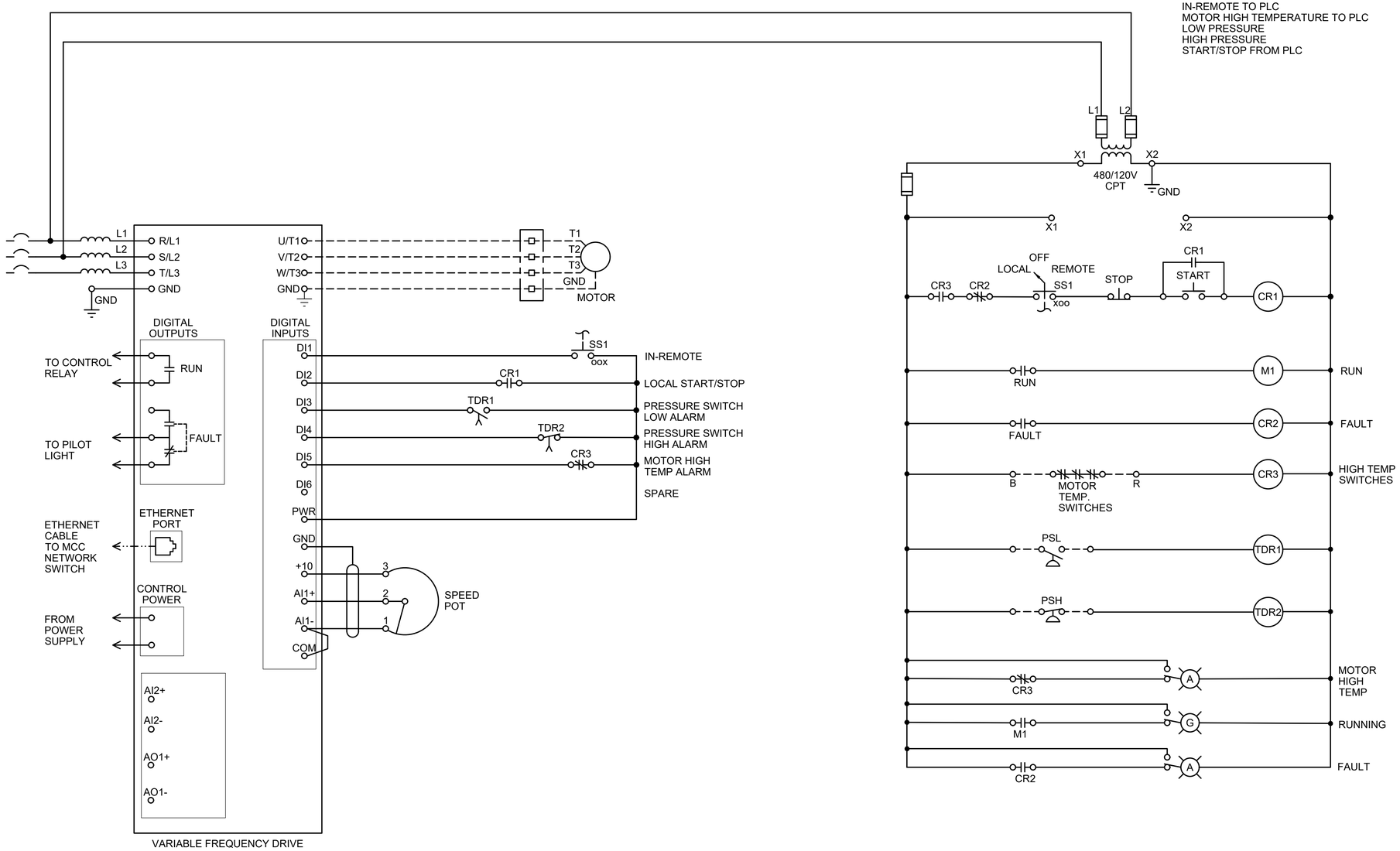

TABLE OF CORRESPONDING DEVICES AND CIRCUITS				
EQUIPMENT	MOTOR CONTROL CENTER	MOTOR TEMP SWITCHES	CIRCUITS	
WAS-PMP-421	500-MCC-001	YES	C-WAS-VFD421-01,02,03,04	T-WAS-VFD421-01
WAS-PMP-422	500-MCC-001	YES	C-WAS-VFD422-01,02,03,04	T-WAS-VFD422-01
SOL-PMP-701	850-MCC-001	YES	C-SOL-VFD701-01,02,03,04	T-SOL-VFD701-01
SOL-PMP-702	850-MCC-001	YES	C-SOL-VFD702-01,02,03,04	T-SOL-VFD702-01

GEORGIA REGISTERED No. PE051935 PROFESSIONAL ENGINEER AKRAM FARIDI

06/26/2024

TYPICAL PROGRESSIVE CAVITY PUMP VARIABLE FREQUENCY DRIVE DIAGRAM

no.	date	by	ckd	description
0	6/26/24	AF	BEG	ISSUED FOR CONSTRUCTION

BURNS McDONNELL
4004 SUMMIT BLVD. NE, SUITE 1200
ATLANTA, GA 30319
770-587-4776
LICENSEE NO. PEF000100
AUTHORIZATION NO. J550903

date: NOVEMBER 13, 2023
detailed: S. GILLIAM
designed: S. GILLIAM
checked: B. GRAEBER

Perry
HOUSTON COUNTY, GEORGIA

EAST PERRY WWTF
PROGRESSIVE CAVITY PUMP VFD SCHEMATIC

project: 148538
contract:
drawing: **100E617** – rev. **0**
sheet of sheets
file 148538_100E617 - PROGRESSIVE CAVITY PUMP

no.	date	by	ckd	description
0	6/26/24	AF	BEG	ISSUED FOR CONSTRUCTION

GENERAL NOTE:

1. REFER TO SPECIFICATION SECTION 40 61 96 - PROCESS CONTROL SOFTWARE PROGRAMMING AND REPORTS FOR DESCRIPTION OF OPERATION AND I/O POINTS TO BE INTEGRATED INTO THE PLANT CONTROL SYSTEM.

KEYED NOTES:

1. SIGNALS VIA ETHERNET CONNECTION:
   MOTOR RUNNING TO PLC
   FAULT TO PLC
   IN-REMOTE TO PLC
   MOTOR HIGH TEMPERATURE TO PLC
   LOW PRESSURE
   HIGH PRESSURE
   START/STOP FROM PLC

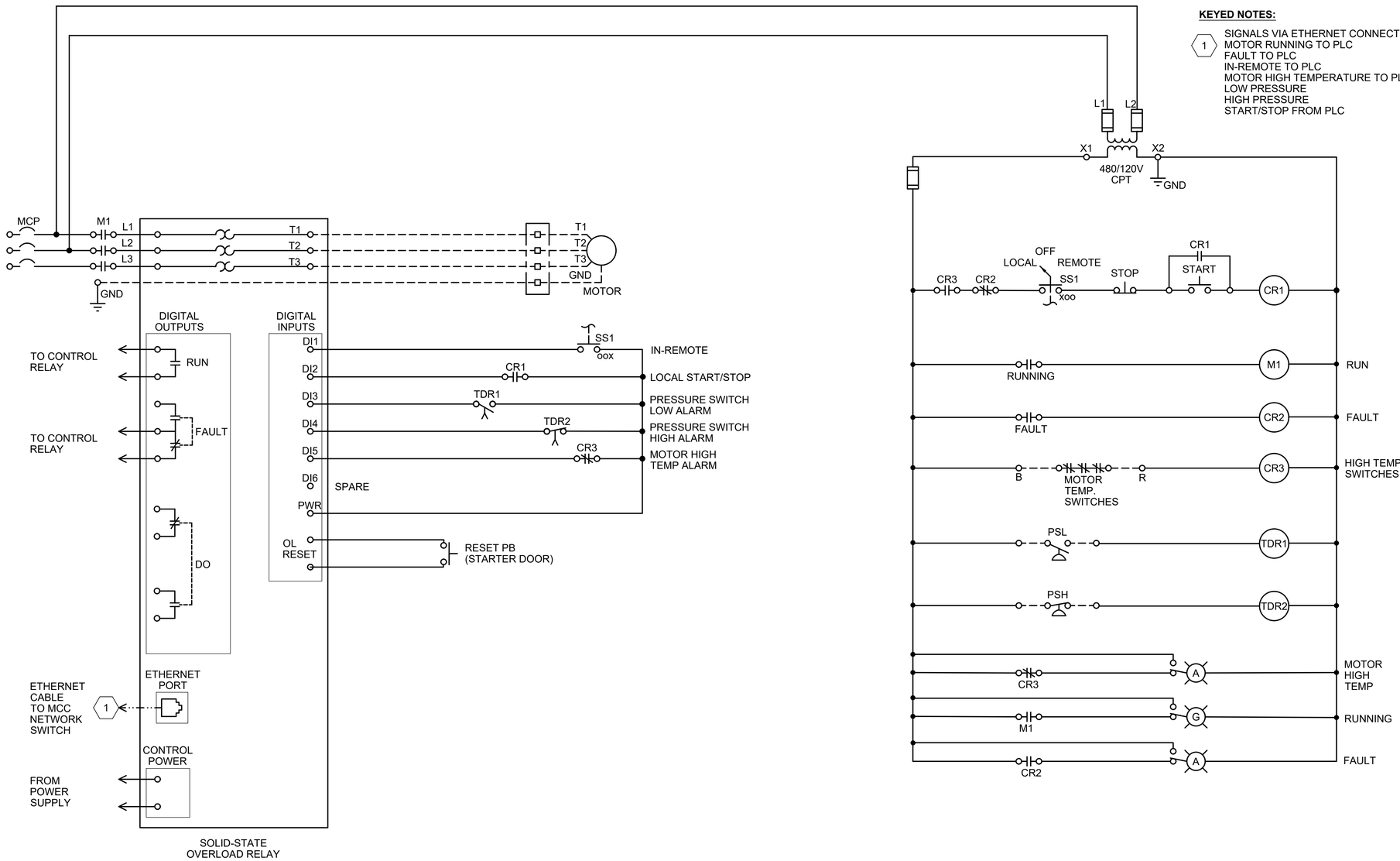

TABLE OF CORRESPONDING DEVICES AND CIRCUITS				
EQUIPMENT	MOTOR CONTROL CENTER	MOTOR TEMP SWITCHES	CIRCUITS	
SCM-PMP-441	500-MCC-001	YES	NA	NA

TYPICAL PROGRESSIVE CAVITY PUMP MOTOR STARTER DIAGRAM

GEORGIA REGISTERED No. PE051936 PROFESSIONAL ENGINEER AKRAM FARIDI

06/26/2024

BURNS McDONNELL
4004 SUMMIT BLVD. NE, SUITE 1200
ATLANTA, GA 30319
770-587-4776
LICENSEE NO. PEF000100
AUTHORIZATION NO. J550903

date	detailed
NOVEMBER 13, 2023	S. GILLIAM
designed	checked
S. GILLIAM	B. GRAEBER

Perry
HOUSTON COUNTY, GEORGIA

EAST PERRY WWTF
PROGRESSIVE CAVITY PUMP STARTER SCHEMATIC

project 148538 | contract

drawing **100E618** – rev. **0**

sheet of sheets

file 148538_100E618 - PROGRESSIVE CAVITY PUMP

Z:\CLIENTS\WTR\PERRYGA\148538_EASTWWTP\DESIGN\CADD\ELEC\PROD_DWGS\SCHEMATICS\148538_100E618 - PROGRESSIVE CAVITY PUMP STARTER SCHEMATIC.DWG 6/25/2024 11:00 AM BDBROCHUE

no.	date	by	ckd	description
0	6/26/24	AF	BEG	ISSUED FOR CONSTRUCTION

GENERAL NOTE:

1. REFER TO SECTION 40 61 96-CONTROL DESCRIPTION AND SYSTEM PROGRAMMING FOR DESCRIPTION OF OPERATION AND I/O POINTS TO BE INTEGRATED INTO THE PLANT CONTROL SYSTEM.

KEYED NOTES:

1. SIGNALS VIA ETHERNET CONNECTION:
   MOTOR RUNNING TO PLC
   FAULT TO PLC
   MOTOR TORQUE ALARM TO PLC
   MOTOR TORQUE TRIP TO PLC

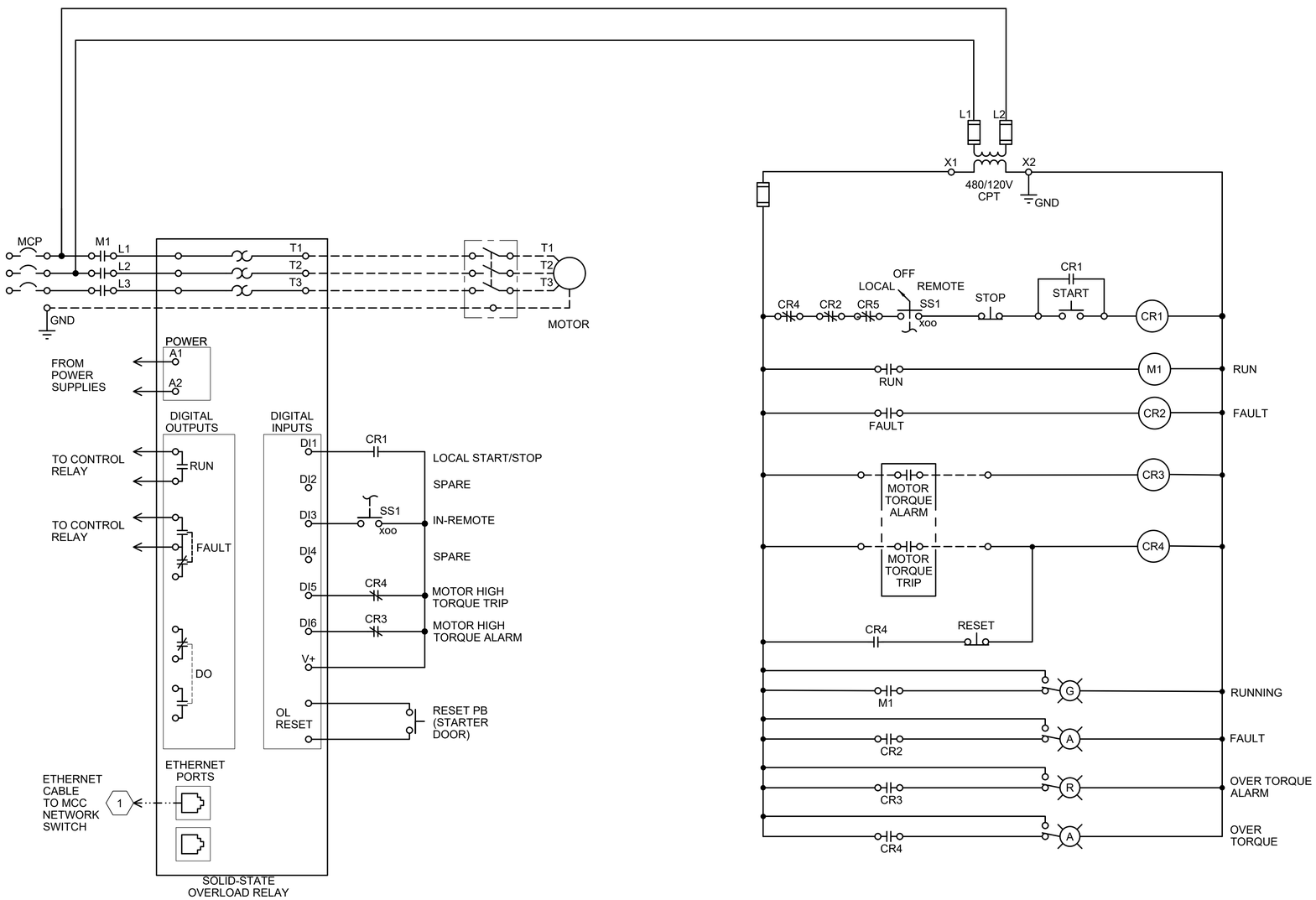

TABLE OF CORRESPONDING DEVICES AND CIRCUITS					
EQUIPMENT	MOTOR CONTROL CENTER	MOTOR TEMP SWITCHES	MOTOR SPACE HEATER	CIRCUITS	
CLA-D-501	500-MCC-001	YES	NO	N/A	-
CLA-D-502	500-MCC-001	YES	NO	N/A	-

CLARIFIER DRIVE MOTOR STARTER SCHEMATIC

GEORGIA REGISTERED No. PE051935 PROFESSIONAL ENGINEER AKRAM FARDI

06/26/2024

BURNS McDONNELL
4004 SUMMIT BLVD. NE, SUITE 1200
ATLANTA, GA 30319
770-587-4776
LICENSEE NO. PEF000100
AUTHORIZATION NO. J550903

date	detailed
NOVEMBER 17, 2023	S. GILLIAM
designed	checked
S. GILLIAM	B. GRAEBER

Perry

HOUSTON COUNTY, GEORGIA

EAST PERRY WWTF
CLARIFIER DRIVE MOTOR STARTER SCHEMATIC

project 148538 | contract

drawing **100E619 –** rev. **0**

sheet of sheets

file 148538_100E619- CLARIFIER DRIVE SCHEMATIC

LIGHT FIXTURE SCHEDULE

TYPE	MANUFACTURER OR APPROVED EQUAL	DESCRIPTION	CATLOG/SERIES NUMBER	BATTERY	LAMP		VOLTAGE	TOTAL WATTS	MOUNTING	FIXTURE FINISH	NOTES
					TYPE	LUMENS					
A	HOLOPHANE	LED, HAZARDOUS ARE LIGHTING FIXTURE, STANCHION MOUNT, 5000K, 8000 LUMENS	HRLL 8L GG 120 50K SM1	N/A	LED	8000	120	94	SUSPENDED	WHITE	
B	HOLOPHANE	LED WET LOCATION, LOW PROFILE, GASKETED, LINEAR LIGHT, 5000K, 4000 LUMENS	EMX L48 4000LM FPCL WD 120 GZ10 50K 80CRI DGXD CR	N/A	LED	8000	120	33.2	SUSPENDED	WHITE	
C	HOLOPHANE	LED HAZARDOUS ARE LIGHTING FIXTIURE, PENDANT MOUNT, 5000K, 8000 LUMENS	HRLL 8L GG 120 50K PM	N/A	LED	8000	120	94	PENDANT	WHITE	
D	HOLOPHANE	EXTERIOR WALL MOUNTED LIGHT FIXTURE, 3000K, 4000 LUMENS, PHOTOCELL CONTROL	HLWPC2 P10 50K 120 T2M BKSDP 80CRI PE EM	N/A	LED	3100	120	28	WALL MOUNTED	WHITE	
E	HOLOPHANE	LED, LOW-PROFILE, RECESSED LUMINAIRE WITH BASKET DIFUSER, 5000K, 5500 LUMENS	HVT 2X2 DOP 5500LM 50K MVOLT 80CRI ZT	N/A	LED	5500	120	52	RECESSED	WHITE	
EM	HOLOPHANE	LED, WET LOCATION, EMERGENCY LIGHT, WITH 90 MINUTE BATTERY BACKUP.	DM30 WL LED	90 MINUTE BATTERY BACKUP	LED	640	120	7	WALL MOUNTED	WHITE	
EMX	HOLOPHANE	EXTERIOR WALL MOUNTED LIGHT FIXTURE, 3000K, 4000 LUMENS, PHOTOCELL CONTROL, BATTERY BACK UP	DLTLC 1 R SD	90 MINUTE BATTERY BACKUP	LED	640	120	7	WALL MOUNTED	WHITE	
F	HOLOPHANE	LED, MONGOOSE MEDIUM, SITE LIGHTING FIXTURE, POLE MOUNTED, 5000K, LUMENS	MGLEDM P4 50K MVOLT WR UN GRSD PCLL US	N/A	LED	25,800	208	180	POLE MOUNTED	DARK BRONZE	POLE SHALL BR AORTA PLN NDR DDB BCV

no.	date	by	ckd	description
0	6/24/26	AF	BEG	ISSUED FOR CONSTRUCTION

GEORGIA REGISTERED No. PE051936 PROFESSIONAL ENGINEER AKRAM FARIDI

06/26/2024

BURNS McDONNELL
4004 SUMMIT BLVD. NE, SUITE 1200
ATLANTA, GA 30319
770-587-4776
LICENSEE NO. PEF000100
AUTHORIZATION NO. J550903

date	detailed
10/12/23	A. LILLY
designed	**checked**
S. GILLIAM	B. GRAEBER

Perry

HOUSTON COUNTY, GEORGIA

EAST PERRY WWTF
LUMINAIRE SCHEDULE

project	contract
148538	

drawing **100E620** – rev. **0**

sheet of sheets

file

no.	date	by	ckd	description
0	6/26/24	AF	BEG	ISSUED FOR CONSTRUCTION

KEY:

- CLASS 1, DIVISION 1, GROUP C & D
- CLASS 1, DIVISION 2, GROUP C & D
- CLASS 1, DIVISION 2, GROUP C & D 12 AC/HR CONTINUOUS
- UNCLASSIFIED, 6 AC/HR CONTINUOUS
- UNCLASSIFIED

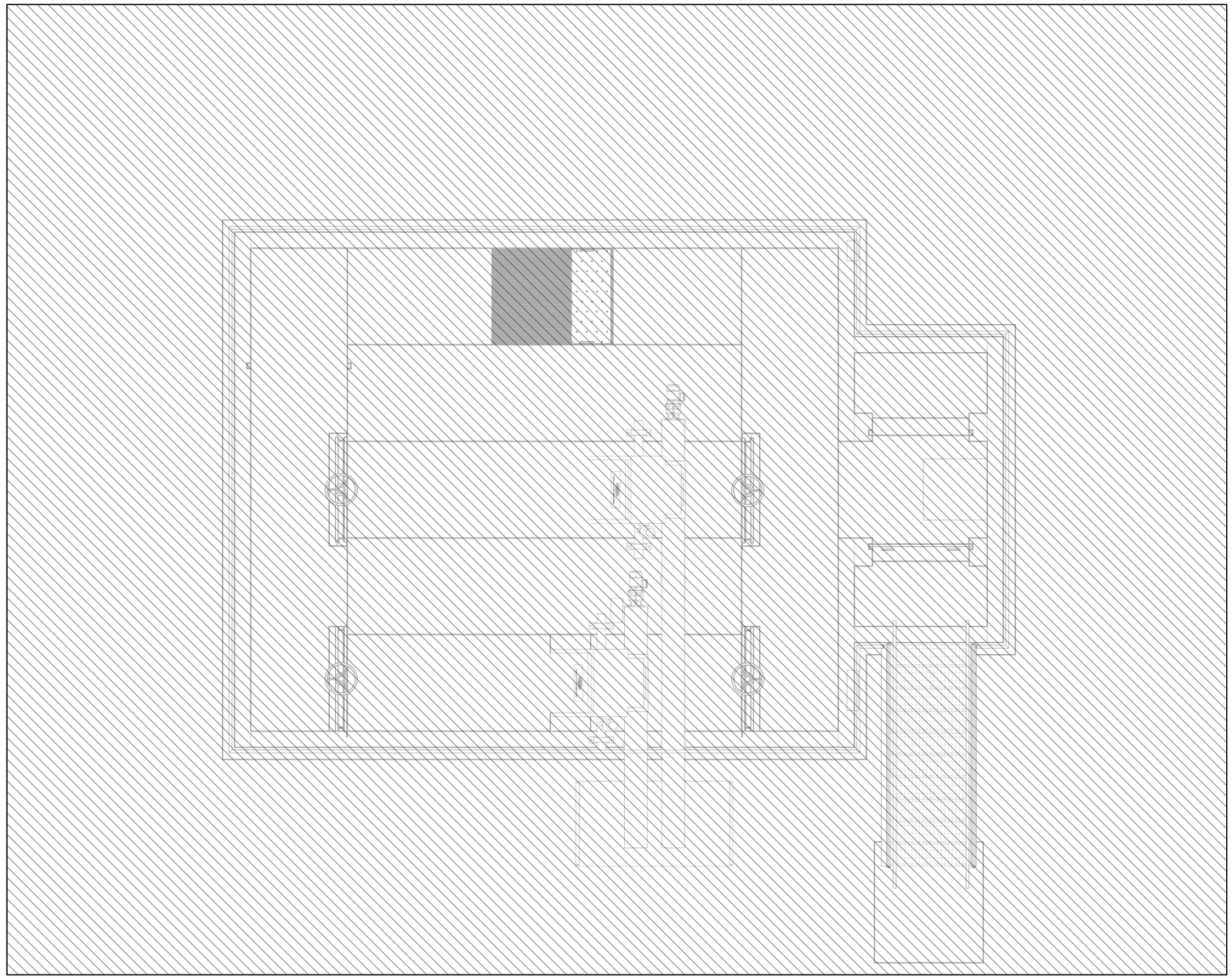

EXTENDS 10'-0" AROUND CHANNELS
(SEE 100E008 FOR DETAILS)

HEADWORKS AREA CLASSIFICATION PLAN

0 2' 4' 6'
SCALE IN FEET

NORTH

GEORGIA REGISTERED No. PE051935 PROFESSIONAL ENGINEER AKRAM FARIDI

06/26/2024

BURNS McDONNELL
4004 SUMMIT BLVD. NE, SUITE 1200
ATLANTA, GA 30319
770-587-4776
LICENSEE NO. PEF000100
AUTHORIZATION NO. J550903

date	detailed
09/27/23	A. LILLY
designed	**checked**
A. FARIDI	V.PATWARI

Perry

HOUSTON COUNTY, GEORGIA

EAST PERRY WWTF
HEADWORKS AREA CLASSIFICATION PLAN

project	contract
148538	

drawing **200E101** – rev. **0**

sheet of sheets

file

Scale For Microfilming
Millimeters
Inches

no.	date	by	ckd	description
0	6/26/24	AF	BEG	ISSUED FOR CONSTRUCTION

KEYED NOTES:

1. SEE 200-FOPP-1 AND 200-SCN-001 RACK ELEVATION ON 100E506 FOR MOUNTING DETAILS.
2. ROUTE CONDUIT ALONG THE EDGE OF THE EQUIPMENT AND THEN EMBED CONDUIT IN CONCRETE AND STUB UP BELOW CONTROL PANEL.
3. TERMINATE GROUND CONDUCTOR PER MANUFACTURER RECOMMENDATIONS. ROUTE GROUNDING CONDUCTOR IN CONDUIT ALONG THE EDGE OF THE EQUIPMENT.
4. ROUTE GROUNDING CONDUCTOR VIA CONDUIT FOR FUTURE EQUIPMENT. CAP CONDUIT AS REQUIRED.

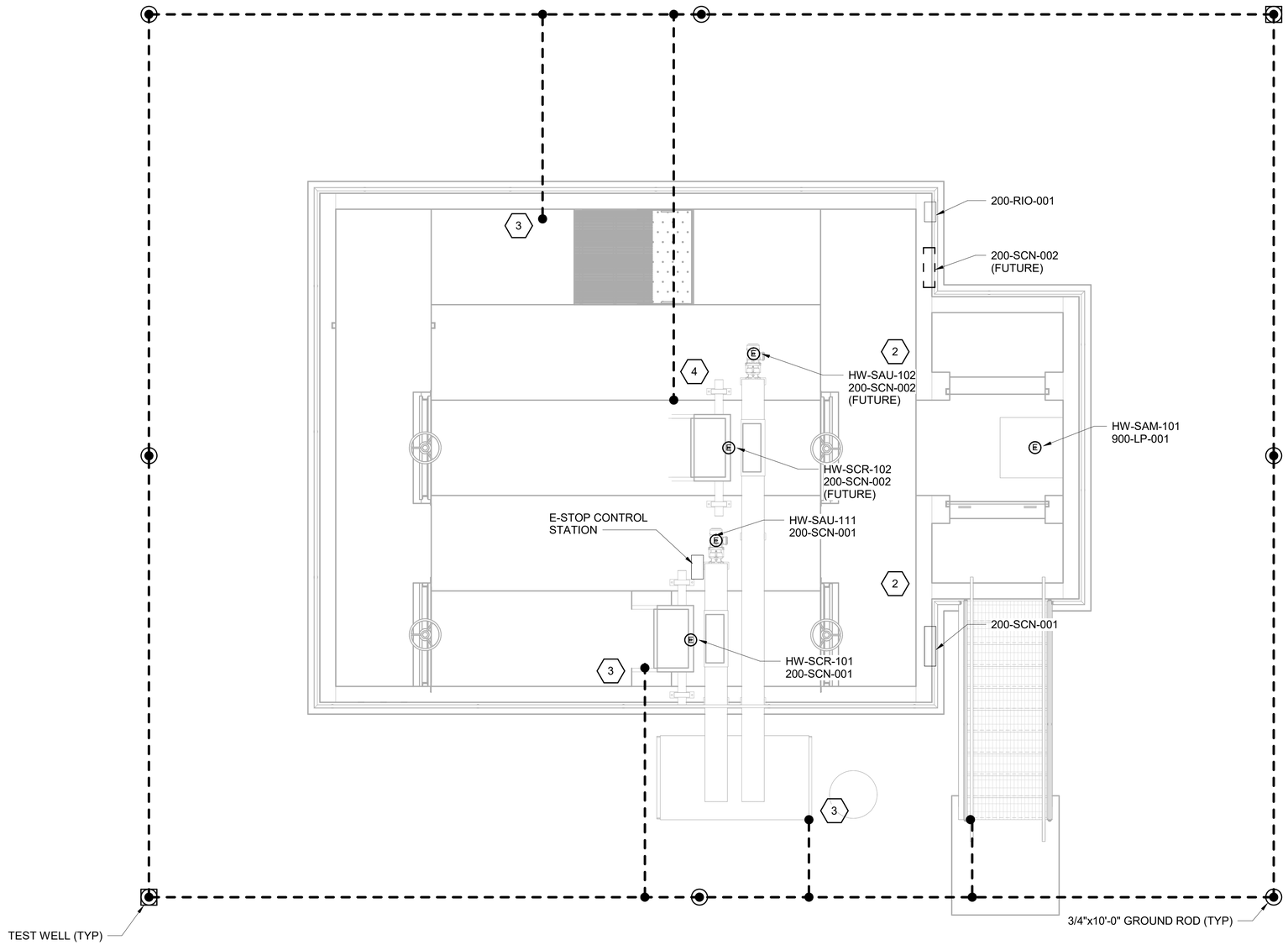

HEADWORKS POWER AND GROUNDING PLAN

0 2' 4' 6'
SCALE IN FEET

NORTH

GEORGIA REGISTERED No. PE051935 PROFESSIONAL ENGINEER AKRAM FARIDI

06/26/2024

BURNS McDONNELL
4004 SUMMIT BLVD. NE, SUITE 1200
ATLANTA, GA 30319
770-587-4776
LICENSEE NO. PEF000100
AUTHORIZATION NO. J550903

date	detailed
AUGUST 2023	S.GILLIAM
designed	**checked**
A.FARIDI	V.PATWARI

Perry
HOUSTON COUNTY, GEORGIA

EAST PERRY WWTF
HEADWORKS POWER AND GROUNDING PLAN

project	contract
148538	

drawing **200E102** – rev. **0**

sheet of sheets

file

no.	date	by	ckd	description
0	6/26/24	AF	BEG	ISSUED FOR CONSTRUCTION

GENERAL NOTES:

1. ALL CONDUIT SHALL BE MOUNTED ALONG THE HANDRAIL.
2. SEAL OFFS SHALL BE PROVIDED AS REQUIRED ON CONDUITS PER CODE.
3. TYPICAL MOUNTING DETAIL FOR LUMINAIRE TO HANDRAILS AT CONTAINMENT BASIN WALL FOR MOUNTING ALL FIXTURES AT HEADWORKS.

KEYED NOTES:

1. MOUNT SWITCH AND RECEPTACLE ON THE TOP EDGE OF THE HANDRAIL.

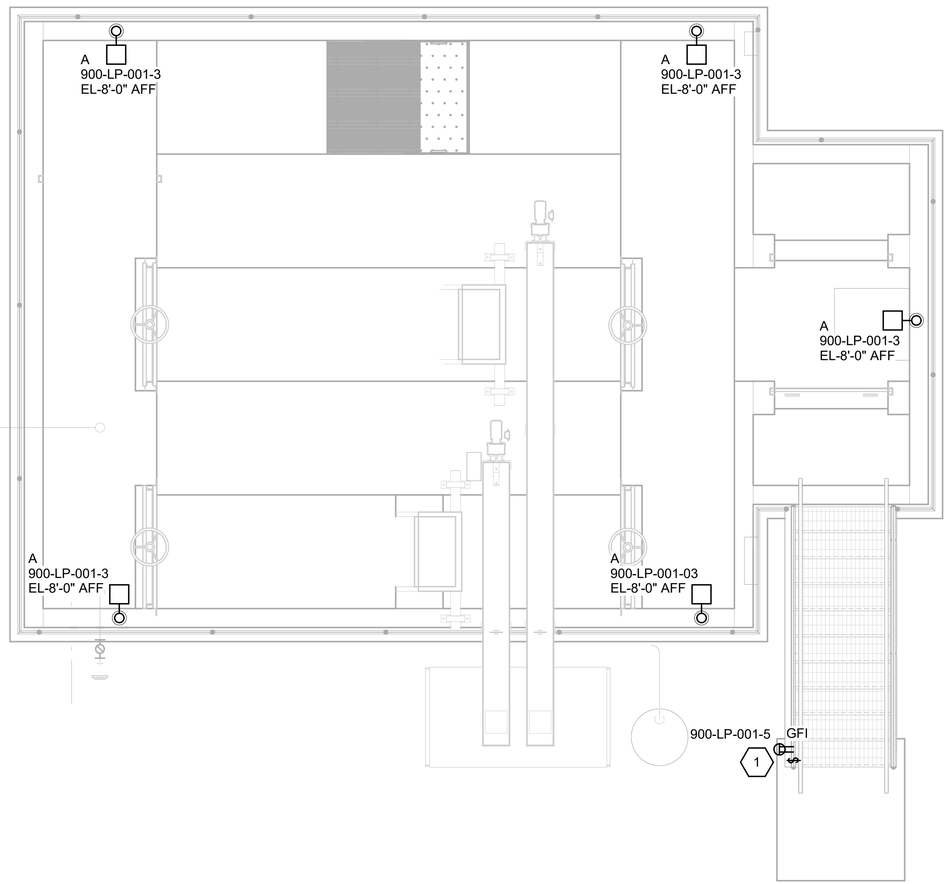

HEADWORKS LIGHTING AND SMALL POWER PLAN

0 2' 4' 6'
SCALE IN FEET

NORTH

GEORGIA REGISTERED No. PE051935 PROFESSIONAL ENGINEER AKRAM FARIDI

06/26/2024

BURNS McDONNELL
4004 SUMMIT BLVD. NE, SUITE 1200
ATLANTA, GA 30319
770-587-4776
LICENSEE NO. PEF000100
AUTHORIZATION NO. J550903

date	detailed
11/20/23	A. LILLY
designed	**checked**
A. FARIDI	B. GRAEBER

Perry
HOUSTON COUNTY, GEORGIA

EAST PERRY WWTF
HEADWORKS LIGHTING AND SMALL POWER PLAN

project	contract
148538	

drawing 200E103 – rev. 0
sheet of sheets
file

KEYED NOTES:

1. SEE SCREEN CHANNEL LEVEL TRANSMITTER MOUNTING DETAILS ON SHEET 100E502.

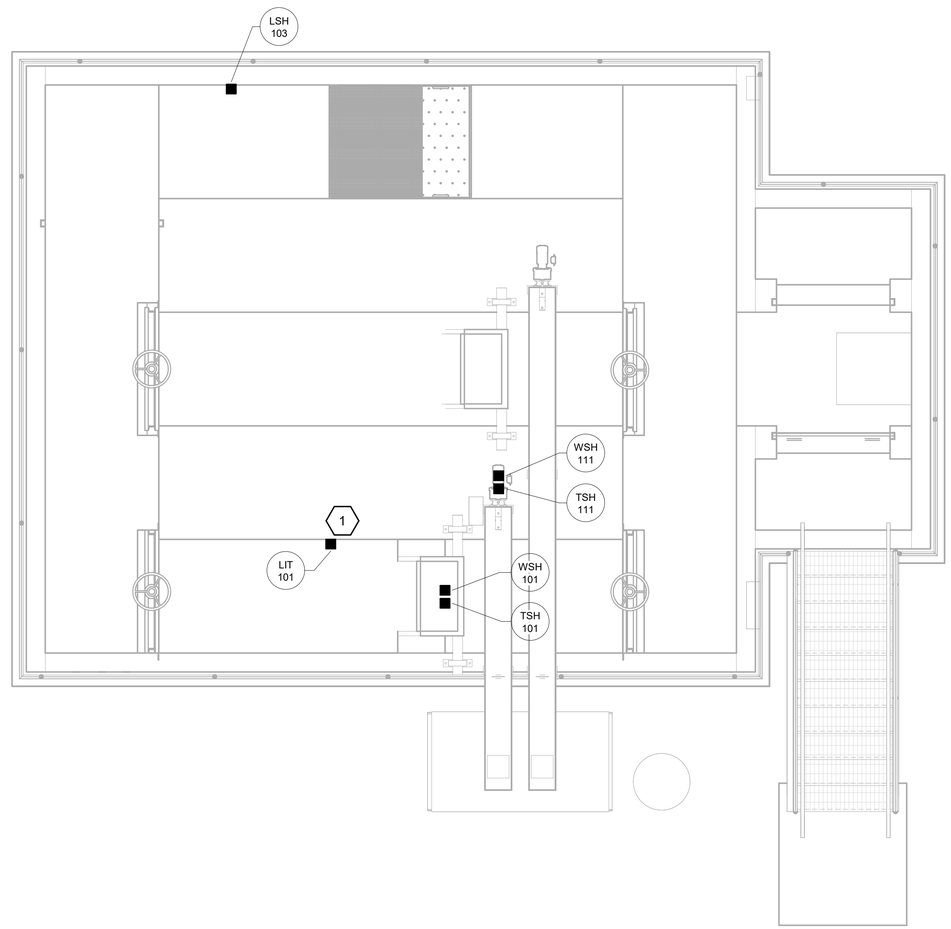

HEADWORKS INSTRUMENTATION PLAN

0 2' 4' 6'
SCALE IN FEET

NORTH

no.	date	by	ckd	description
0	6/26/24	AF	BEG	ISSUED FOR CONSTRUCTION

BURNS McDONNELL
4004 SUMMIT BLVD. NE, SUITE 1200
ATLANTA, GA 30319
770-587-4776
LICENSEE NO. PEF000100
AUTHORIZATION NO. J550903

date	detailed
11/15/23	A. LILLY
designed	**checked**
S. GILLIAM	B. GRAEBER

Perry

HOUSTON COUNTY, GEORGIA

GEORGIA REGISTERED No. PE051935 PROFESSIONAL ENGINEER AKRAM FARDI

06/26/2024

EAST PERRY WWTF
HEADWORKS INSTRUMENTATION PLAN

project	contract
148538	

drawing **200E104** – rev. **0**

sheet of sheets

file

Scale For Microfilming
Millimeters
Inches

no.	date	by	ckd	description
0	6/26/24	AF	BEG	ISSUED FOR CONSTRUCTION

KEY:

- CLASS 1, DIVISION 1, GROUP C & D
- CLASS 1, DIVISION 2, GROUP C & D
- CLASS 1, DIVISION 2, GROUP C & D 12 AC/HR CONTINUOUS
- UNCLASSIFIED, 6 AC/HR CONTINUOUS
- UNCLASSIFIED

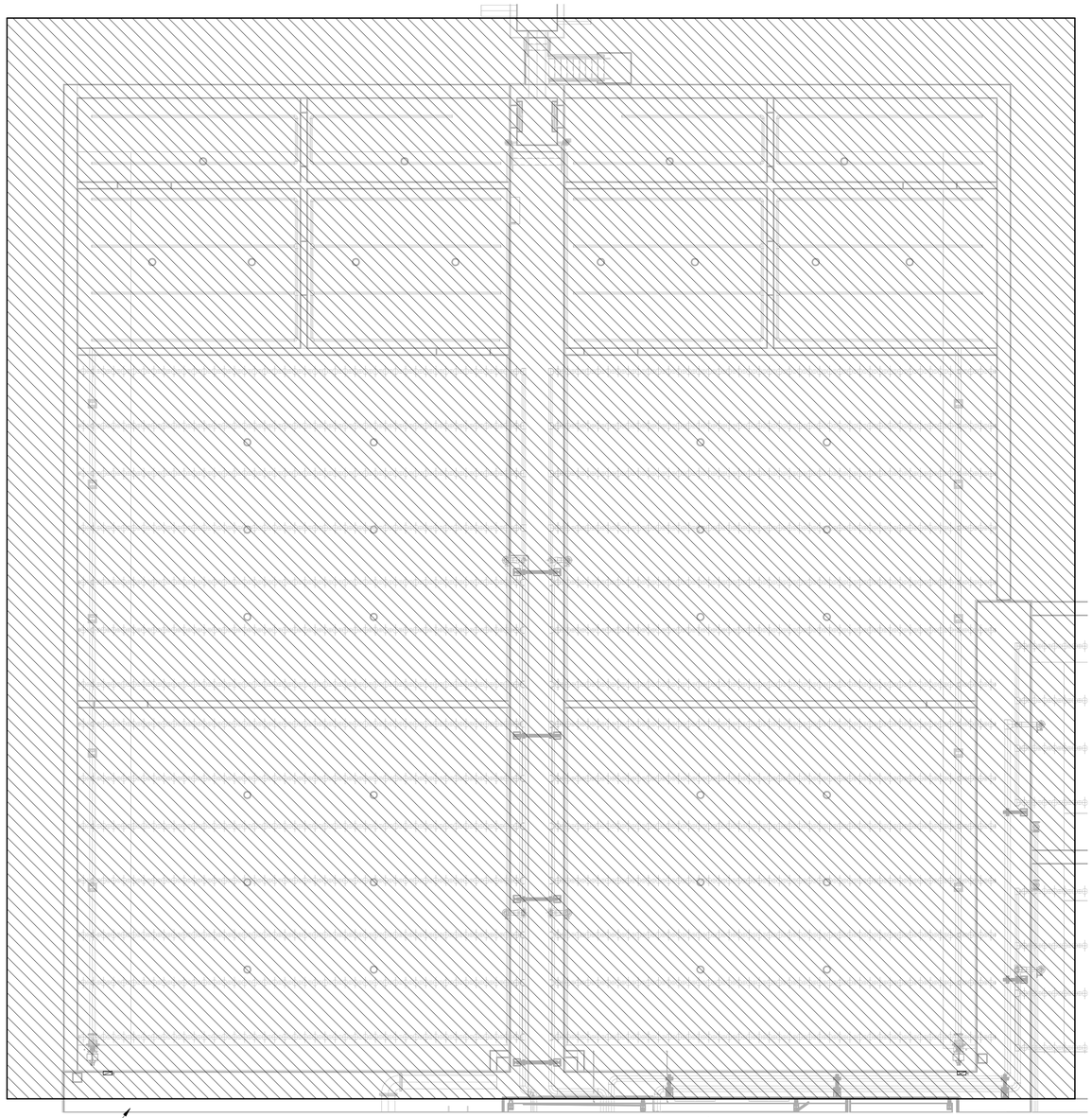

EXTENDS 10'-0" AROUND CHANNELS
(SEE 100E008 FOR DETAILS)

PROCESS BASIN A AREA CLASSIFICATION PLAN

0 8' 16' 32'
SCALE IN FEET

NORTH

GEORGIA REGISTERED No. PE051935 PROFESSIONAL ENGINEER AKRAM FARIDI

06/26/2024

BURNS McDONNELL
4004 SUMMIT BLVD. NE, SUITE 1200
ATLANTA, GA 30319
770-587-4776
LICENSEE NO. PEF000100
AUTHORIZATION NO. J550903

date	detailed
09/27/23	A. LILLY
designed	**checked**
A.FARIDI	V.PATWARI

Perry
HOUSTON COUNTY, GEORGIA

EAST PERRY WWTF
PROCESS BASIN AREA A CLASSIFICATION PLAN

project	contract
148538	

drawing **400E101** – rev. **0**

sheet of sheets

file

Scale For Microfilming
Millimeters
Inches

no.	date	by	ckd	description
0	6/26/24	AF	BEG	ISSUED FOR CONSTRUCTION

KEYED NOTES:

1. ROUTE ALL CONDUITS ALONG THE EDGE OF THE WALKWAY SUCH THAT IT DOES NOT BECOME A TRIP HAZARD.
2. PROVIDE SEAL OFFS ON CONDUITS LEAVING CLASSIFIED SPACE PER NEC. SEE CLASSIFICATION DRAWINGS FOR SPACE REQUIREMENTS.
3. SEE SUBMERSIBLE PUMP MELTRIC DECONTACTOR DETAIL ON 100E003 FOR MOUNTING AND DISCONNECT DETAILS.

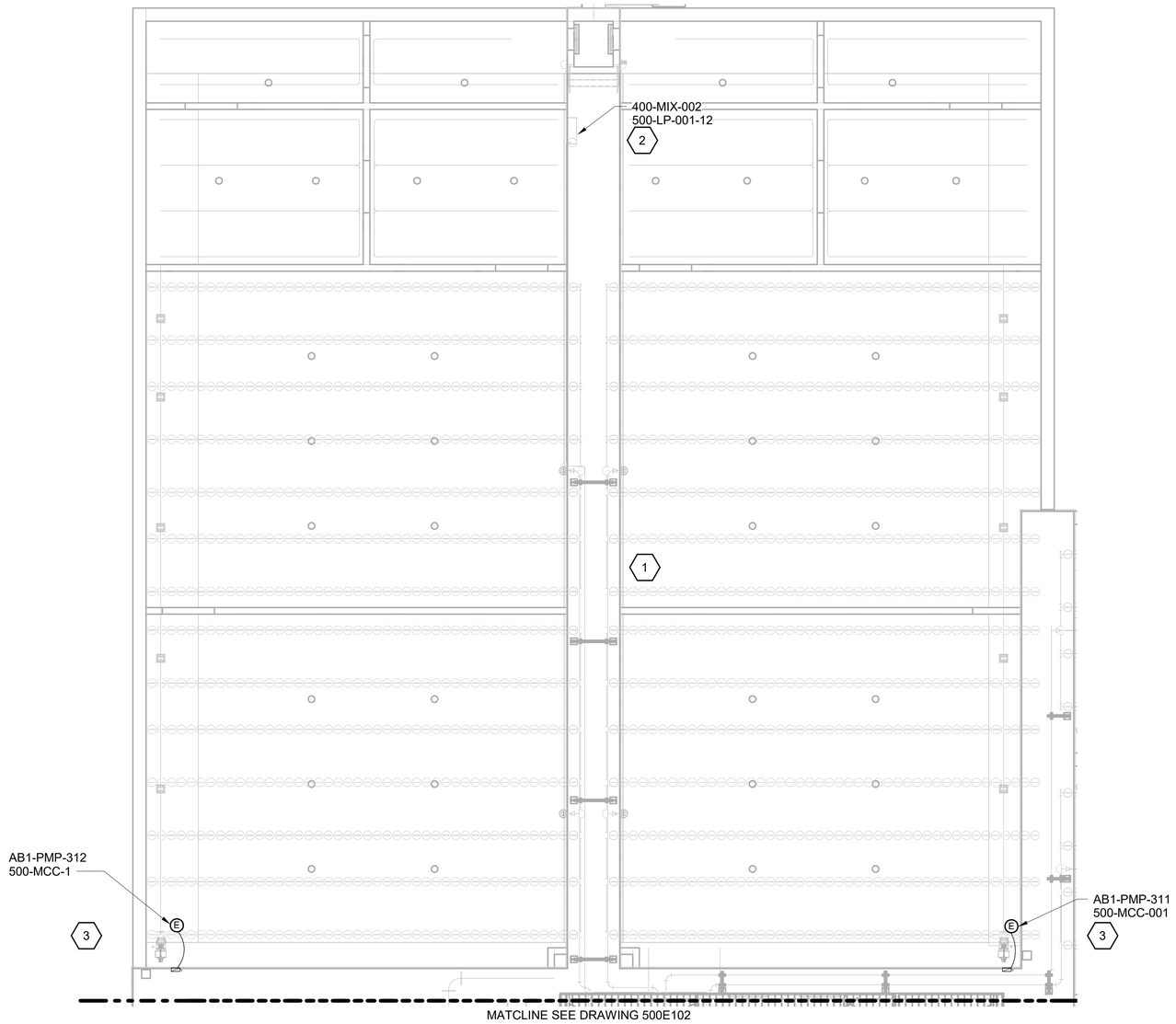

PROCESS BASIN A POWER PLAN

0 8' 16' 24'
SCALE IN FEET

NORTH

GEORGIA REGISTERED No. PE051935 PROFESSIONAL ENGINEER AKRAM FARIDI

06/26/2024

BURNS McDONNELL
4004 SUMMIT BLVD. NE, SUITE 1200
ATLANTA, GA 30319
770-587-4776
LICENSEE NO. PEF000100
AUTHORIZATION NO. J550903

date	detailed
AUGUST 2023	S.GILLIAM
designed	**checked**
A.FARIDI	V.PATWARI

Perry

HOUSTON COUNTY, GEORGIA

EAST PERRY WWTF
PROCESS BASIN A POWER PLAN

project	contract
148538	

drawing **400E102** – rev. **0**

sheet of sheets

file

GENERAL NOTES:

1. SEE TYPICAL MOUNTING DETAIL FOR LUMINAIRE TO HANDRAIL AT CONTAINMENT BASIN WALL FOR ALL PROCESS BASIN FIXTURES.
2. ALL RECEPTACLES ON PROCESS BASIN SHALL BE WEATHER PROOF.

KEYED NOTES:

1. MOUNT SWITCH AND RECEPTACLES ON THE TOP EDGE OF THE HANDRAIL.

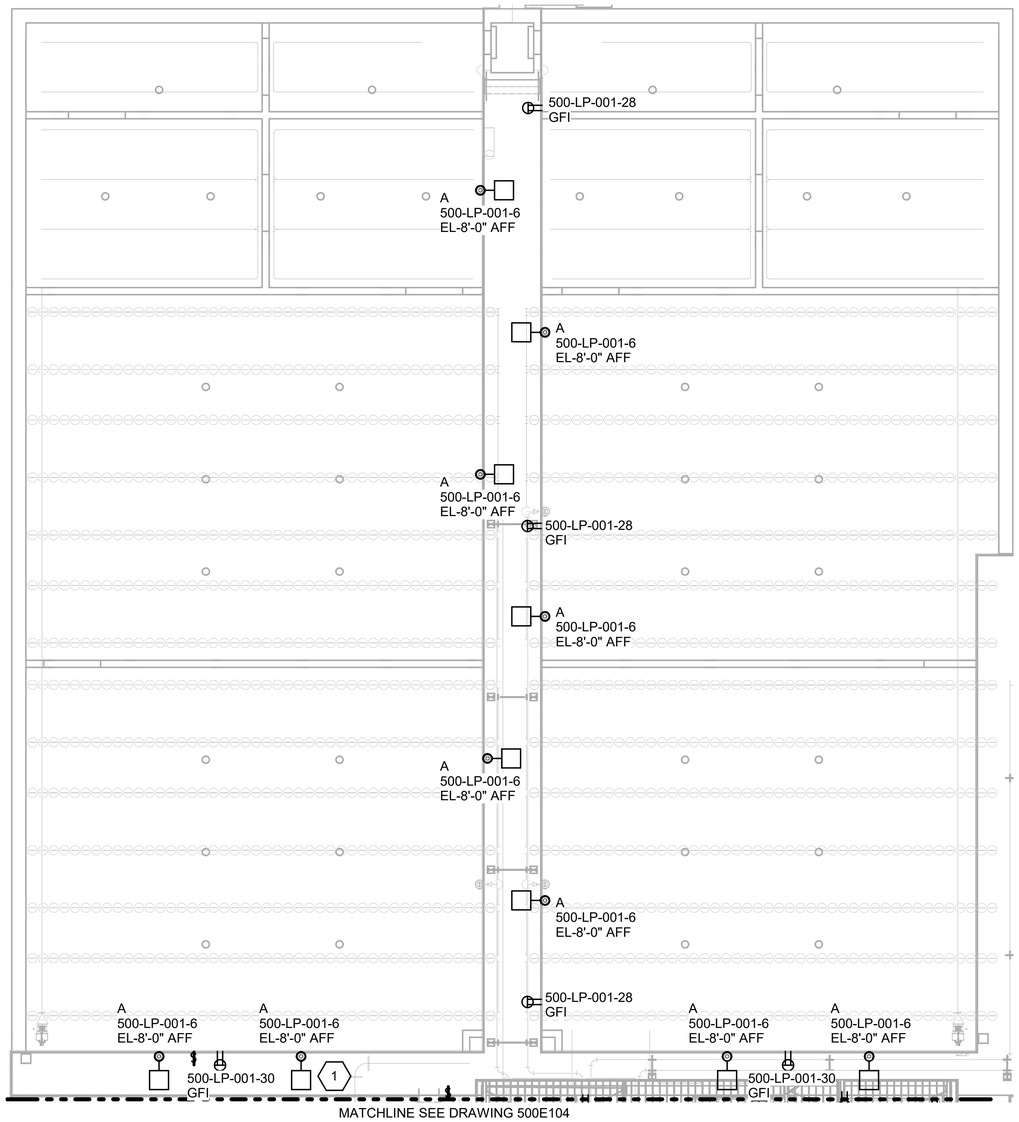

PROCESS BASIN A LIGHTING AND SMALL POWER PLAN

0 8' 16' 24'
SCALE IN FEET

NORTH

no.	date	by	ckd	description
0	6/26/24	AF	BEG	ISSUED FOR CONSTRUCTION

BURNS McDONNELL
4004 SUMMIT BLVD. NE, SUITE 1200
ATLANTA, GA 30319
770-587-4776
LICENSEE NO. PEF000100
AUTHORIZATION NO. J550903

date	detailed
11/20/23	A. LILLY
designed	**checked**
A. FARIDI	B. GRAEBER

Perry
HOUSTON COUNTY, GEORGIA

GEORGIA REGISTERED No. PE051935 PROFESSIONAL ENGINEER AKRAM FARIDI
06/26/2024

EAST PERRY WWTF
PROCESS BASIN A LIGHTING AND SMALL POWER PLAN

project	contract
148538	

drawing **400E103** – rev. **0**
sheet of sheets
file

no.	date	by	ckd	description
0	6/26/24	AF	BEG	ISSUED FOR CONSTRUCTION

GENERAL NOTES:

1. SEE 100E502 FOR AEROBIC/ANAEROBIC BASIN DO/ORP PROBE INSTALLATION DETIALS.

KEYED NOTES:

1. MOUNT TRANSMITTER ON RAILING MIN 30" ABOVE WALKWAY.
2. MOUNT SENSOR ON POLE, FIX POLE TO RAILING.

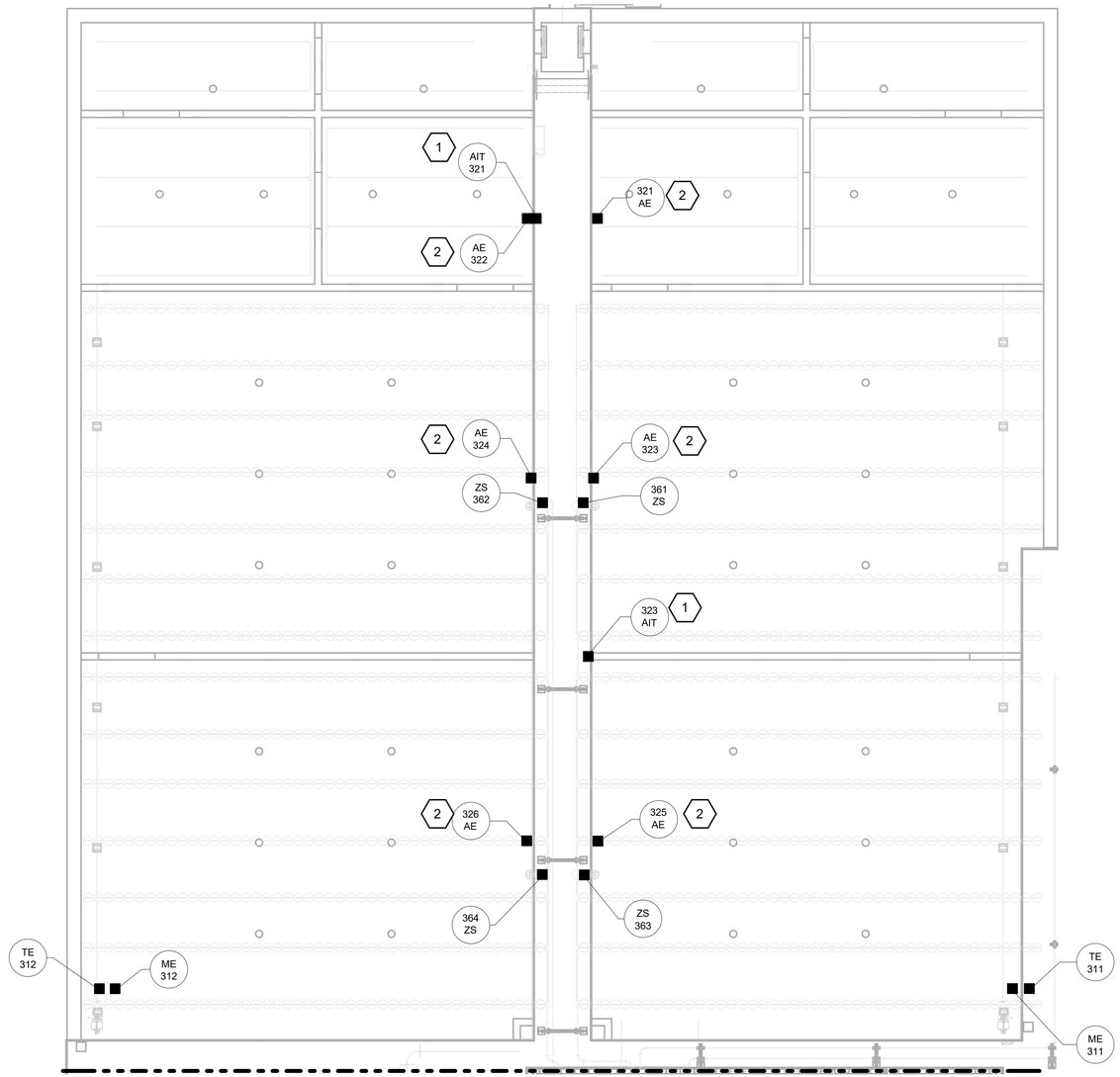

PROCESS BASIN A INSTRUMENTATION PLAN

GEORGIA REGISTERED No. PE051936 PROFESSIONAL ENGINEER AKRAM FARIDI

06/26/2024

BURNS McDONNELL
4004 SUMMIT BLVD. NE, SUITE 1200
ATLANTA, GA 30319
770-587-4776
LICENSEE NO. PEF000100
AUTHORIZATION NO. J550903

date	detailed
11/16/23	A. LILLY
designed	**checked**
S. GILLIAM	B. GRAEBER

Perry

HOUSTON COUNTY, GEORGIA

EAST PERRY WWTF

PROCESS BASIN A INSTRUMENTATION PLAN

project	contract
148538	

drawing **400E104** — rev. **0**

sheet of sheets

file

Scale For Microfilming: Millimeters / Inches

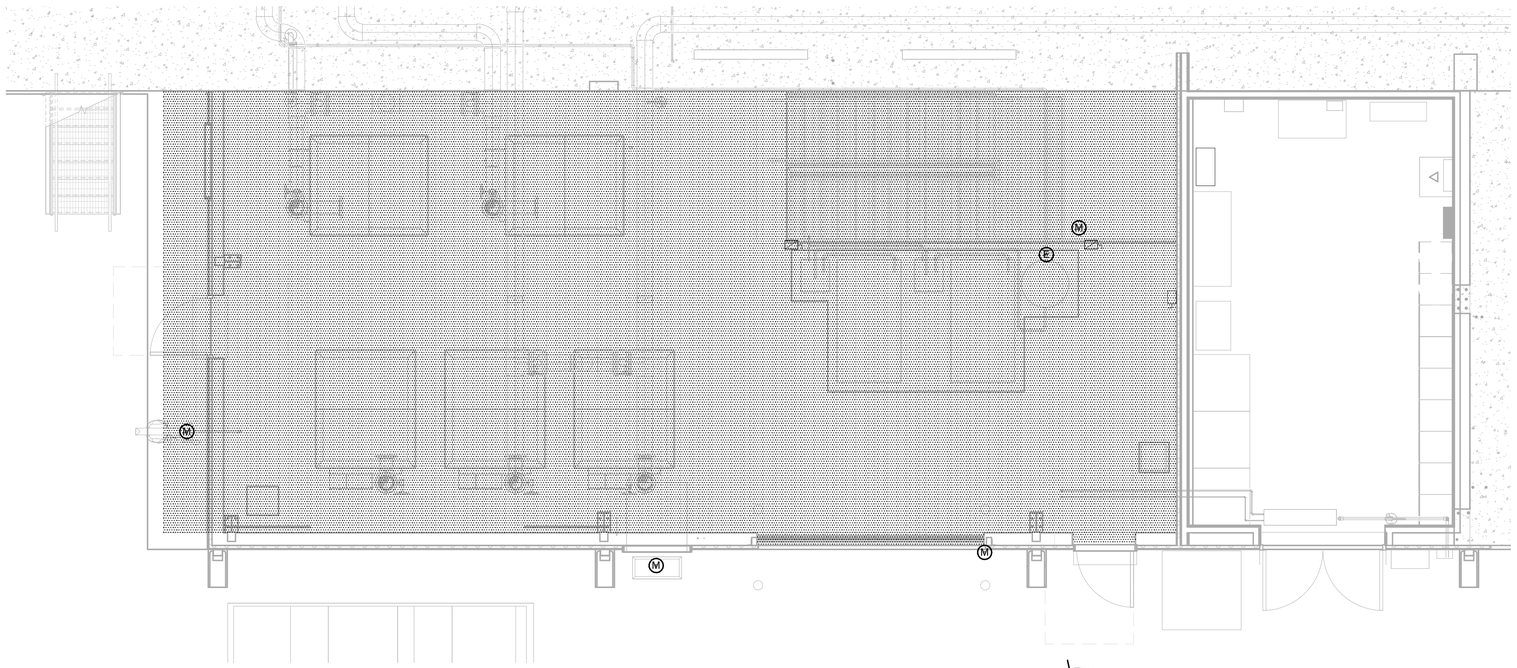

KEY:

- CLASS 1, DIVISION 1, GROUP C & D
- CLASS 1, DIVISION 2, GROUP C & D
- CLASS 1, DIVISION 2, GROUP C & D 12 AC/HR CONTINUOUS
- UNCLASSIFIED, 6 AC/HR CONTINUOUS
- UNCLASSIFIED

PROCESS BUILDING A UPPER LEVEL AREA CLASSIFICATION PLAN

0 4' 8' 16'
SCALE IN FEET

NORTH

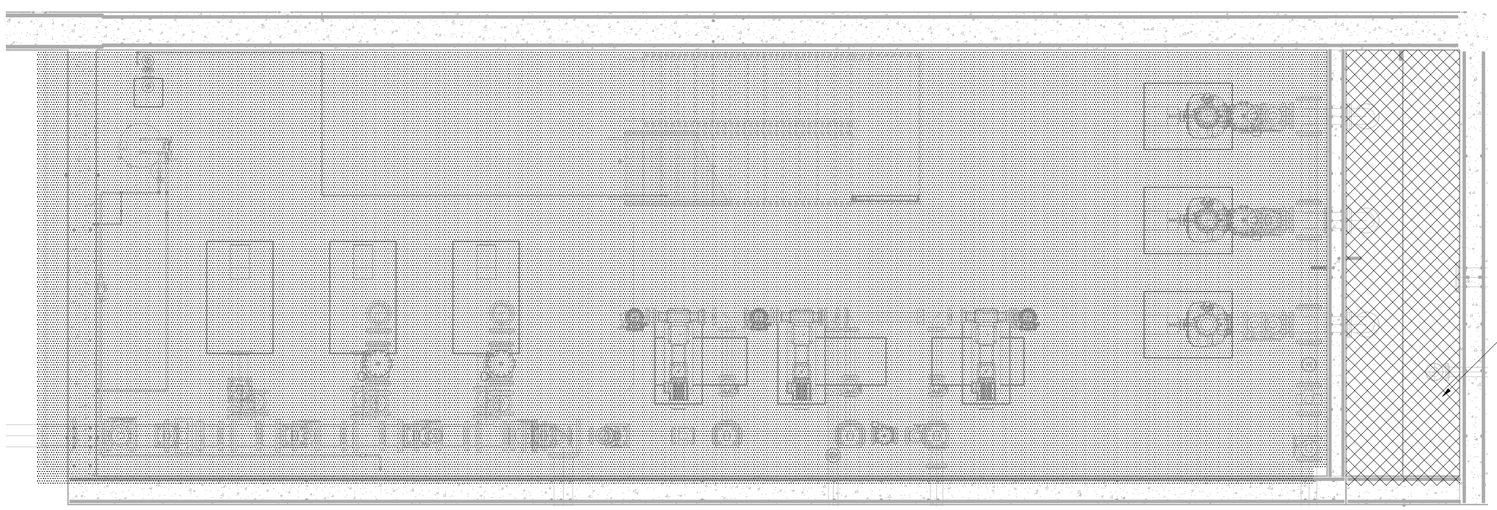

SEE 100E508 FOR WET WELL DETAIL

PROCESS BUILDING A LOWER LEVEL AREA CLASSIFICATION PLAN

0 4' 8' 16'
SCALE IN FEET

NORTH

GEORGIA REGISTERED No. PE051935 PROFESSIONAL ENGINEER AKRAM FARIDI

06/26/2024

no.	date	by	ckd	description
0	6/26/24	AF	BEG	ISSUED FOR CONSTRUCTION

BURNS McDONNELL
4004 SUMMIT BLVD. NE, SUITE 1200
ATLANTA, GA 30319
770-587-4776
LICENSEE NO. PEF000100
AUTHORIZATION NO. J550903

date	detailed
09/27/23	A. LILLY
designed	**checked**
A.FARIDI	V.PATWARI

Perry
HOUSTON COUNTY, GEORGIA

EAST PERRY WWTF
PROCESS BUILDING A AREA CLASSIFICATION PLAN

project	contract
148538	

drawing **500E101** – rev. **0**

sheet of sheets

file

no.	date	by	ckd	description
0	6/26/24	AF	BEG	ISSUED FOR CONSTRUCTION

KEYED NOTES:

1. ROUTE CONDUIT BELOW GRADE FROM SOURCE. STUB CONDUIT UP AT BLOWER LOCATION.
2. PROVIDE SEAL OFFS ON ALL CONDUITS LEAVING UPPER AND LOWER LEVELS AND ENTERING ELECTRICAL ROOM PER NEC.
3. GROUND STUCTURAL STEEL PER PRE-ENGINEERED BUILDING GROUNDING DETAIL ON 100E503.
4. ROUTE 2#12, 1#12 GRD. IN 3/4" CONDUIT TO DSS-01 FROM HP-01. INDOOR UNIT POWERED THROUGH OUTDOOR UNIT.
5. DISCONNECT SWITCHES FOR AER-DRY-331, AER-DRY-332, AER-C-331 AND AER-C-332 SHALLBE TIME-DELAYED FUSED TYPE.

GENERAL NOTES:

1. REFER TO DRAWING 100E001 FOR ELECTRICAL LEGEND AND GENERAL NOTES.
2. REFER TO DRAWING 100E502 THROUGH 100E503 FOR GROUNDING DETAILS.

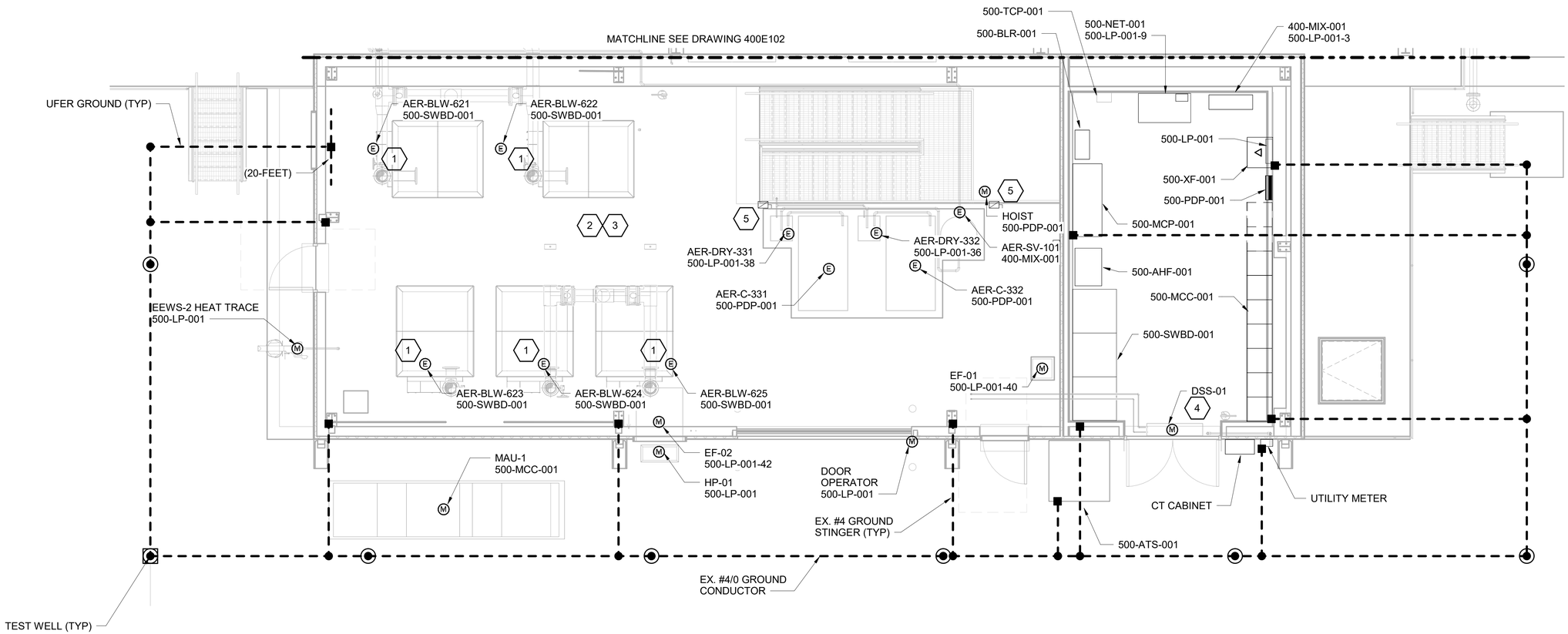

PROCESS BUILDING A UPPER LEVEL ELECTRICAL PLAN

0 2' 4' 8'
SCALE IN FEET

NORTH

GEORGIA REGISTERED No. PE051935 PROFESSIONAL ENGINEER AKRAM FARIDI

06/26/2024

BURNS McDONNELL
4004 SUMMIT BLVD. NE, SUITE 1200
ATLANTA, GA 30319
770-587-4776
LICENSEE NO. PEF000100
AUTHORIZATION NO. J550903

date	detailed
AUGUST 2023	S.GILLIAM
designed	**checked**
S.GILLIAM	S.TAYLOR

Perry

HOUSTON COUNTY, GEORGIA

EAST PERRY WWTF

PROCESS BUILDING A UPPER LEVEL GROUNDING AND POWER PLAN

project	contract
148538	

drawing **500E102** – rev. **0**

sheet of sheets

file

no.	date	by	ckd	description
0	6/26/24	AF	BEG	ISSUED FOR CONSTRUCTION

KEYED NOTES:

1. PROVIDE SEAL OFFS ON ALL CONDUITS LEAVING UPPER AND LOWER LEVELS AND ENTERING ELECTRICAL ROOM PER NEC.
2. SEE RACK MOUNTING DETAIL FOR DISCONNECT.

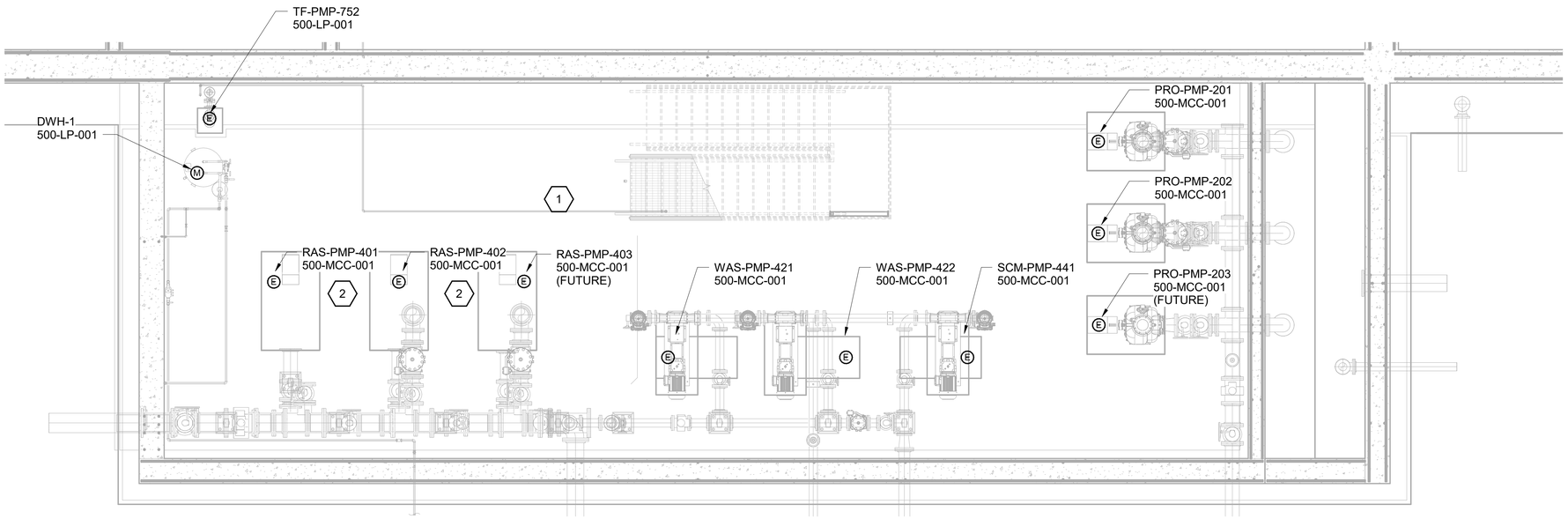

PROCESS BUILDING A LOWER LEVEL PLAN

0 2' 4' 8'
SCALE IN FEET

NORTH

GEORGIA REGISTERED No. PE051935 PROFESSIONAL ENGINEER AKRAM FARIDI

06/26/2024

BURNS McDONNELL
4004 SUMMIT BLVD. NE, SUITE 1200
ATLANTA, GA 30319
770-587-4776
LICENSEE NO. PEF000100
AUTHORIZATION NO. J550903

date	detailed
AUGUST 2023	S.GILLIAM
designed	**checked**
A.FARIDI	V.PATWARI

Perry

HOUSTON COUNTY, GEORGIA

EAST PERRY WWTF

PROCESS BUILDING A LOWER LEVEL GROUNDING AND POWER PLAN

project	contract
148538	

drawing **500E103** – rev. **0**

sheet of sheets

file

Scale For Microfilming: Millimeters / Inches

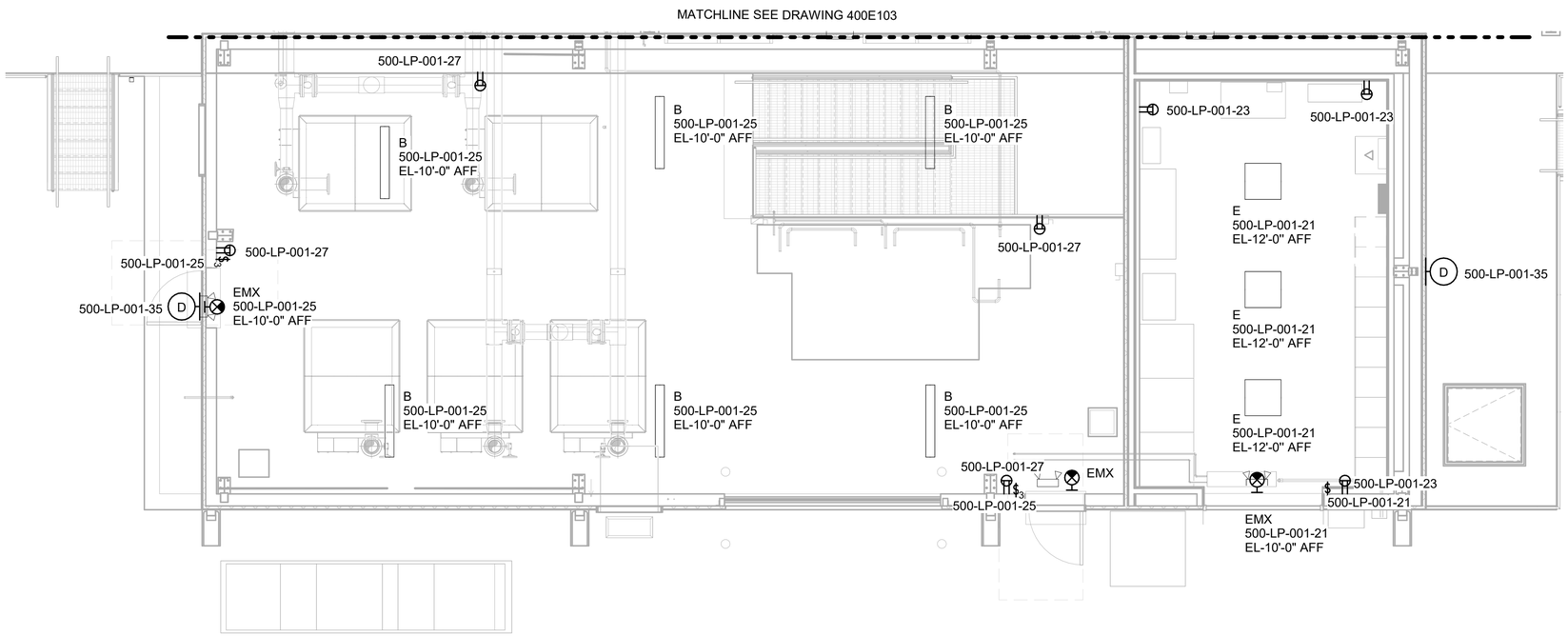

PROCESS BUILDING A UPPER LEVEL SMALL POWER AND LIGHTING PLAN

0 2' 4' 8'
SCALE IN FEET

NORTH

GEORGIA REGISTERED No. PE051935 PROFESSIONAL ENGINEER AKRAM FARIDI

06/26/2024

no.	date	by	ckd	description
0	6/26/24	AF	BEG	ISSUED FOR CONSTRUCTION

BURNS McDONNELL
4004 SUMMIT BLVD. NE, SUITE 1200
ATLANTA, GA 30319
770-587-4776
LICENSEE NO. PEF000100
AUTHORIZATION NO. J550903

date	detailed
11/20/23	A. LILLY
designed	**checked**
A. FARIDI	B. GRAEBER

Perry
HOUSTON COUNTY, GEORGIA

EAST PERRY WWTF
PROCESS BUILDING A UPPER LEVEL LIGHTING AND SMALL POWER PLAN

project	contract
148538	

drawing **500E104** – rev. **0**

sheet of sheets

file

no.	date	by	ckd	description
0	6/26/24	AF	BEG	ISSUED FOR CONSTRUCTION

KEYED NOTES:

1. MOUNT LIGHT FIXTURES AT 10'-0" ABOVE FINISHED FLOOR. SEE TYPICAL MOUNTING DETAIL FOR FLOURESCENT FIXTURE.

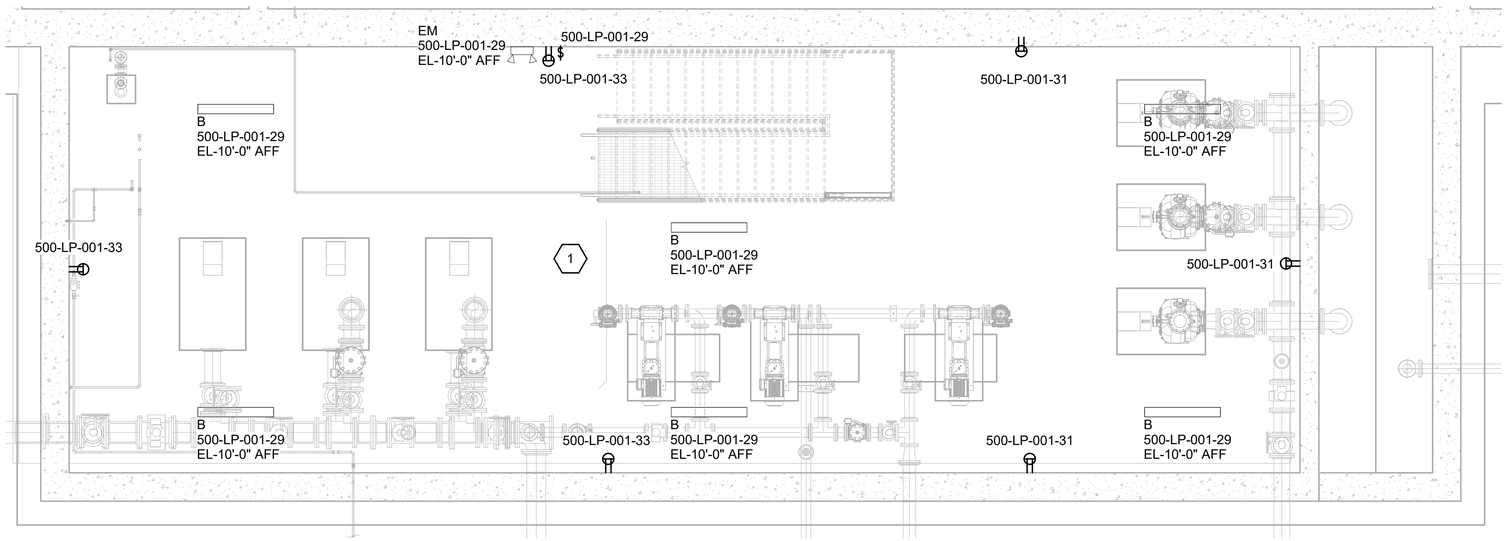

PROCESS BUILDING A LOWER LEVEL PLAN

0 2' 4' 8'
SCALE IN FEET

NORTH

GEORGIA REGISTERED No. PE051935 PROFESSIONAL ENGINEER AKRAM FARIDI

06/26/2024

BURNS McDONNELL
4004 SUMMIT BLVD. NE, SUITE 1200
ATLANTA, GA 30319
770-587-4776
LICENSEE NO. PEF000100
AUTHORIZATION NO. J550903

date	detailed
11/20/23	A. LILLY
designed	**checked**
A. FARIDI	B. GRAEBER

Perry
HOUSTON COUNTY, GEORGIA

EAST PERRY WWTF
PROCESS BUILDING A LOWER LEVEL LIGHTING AND SMALL POWER PLAN

project	contract
148538	

drawing **500E105** – rev. **0**

sheet of sheets

file

no.	date	by	ckd	description
0	6/26/24	AF	BEG	ISSUED FOR CONSTRUCTION

KEYED NOTES:

1. INSTALL LEVEL INSTRUMENTATION ACCORDING TO INSTALLATION DETAIL ON 100E507.

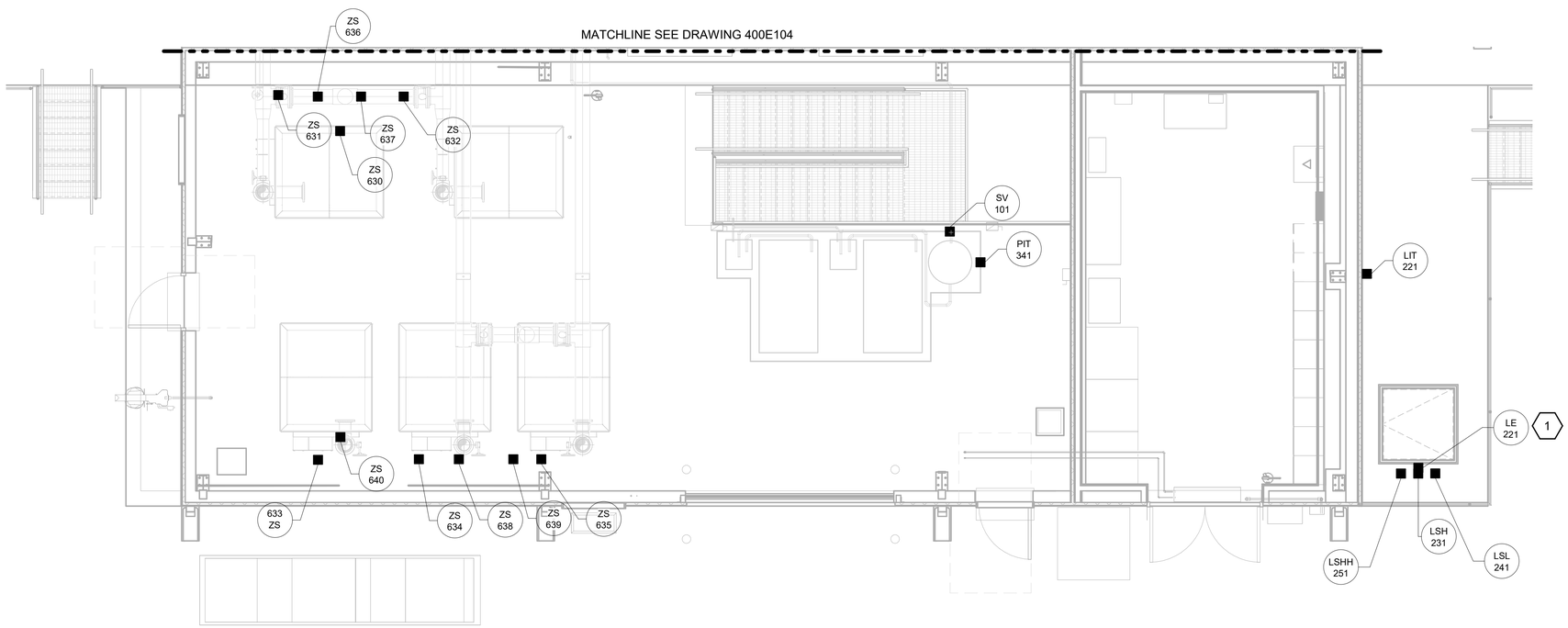

PROCESS BUILDING A UPPER LEVEL PLAN

0 2' 4' 8'
SCALE IN FEET

NORTH

GEORGIA REGISTERED No. PE051935 PROFESSIONAL ENGINEER AKRAM FARDI

06/26/2024

BURNS McDONNELL
4004 SUMMIT BLVD. NE, SUITE 1200
ATLANTA, GA 30319
770-587-4776
LICENSEE NO. PEF000100
AUTHORIZATION NO. J550903

date	detailed
11/16/23	A. LILLY
designed	**checked**
S. GILLIAM	B. GRAEBER

Perry

HOUSTON COUNTY, GEORGIA

EAST PERRY WWTF

PROCESS BUILDING A UPPER LEVEL INSTRUMENTATION PLAN

project	contract
148538	

drawing **500E106** – rev. **0**

sheet of sheets

file

no.	date	by	ckd	description
0	6/26/24	AF	BEG	ISSUED FOR CONSTRUCTION

KEYED NOTES:

1. FOR MAG METER GROUNDING REFER TO DRAWING 100E501.

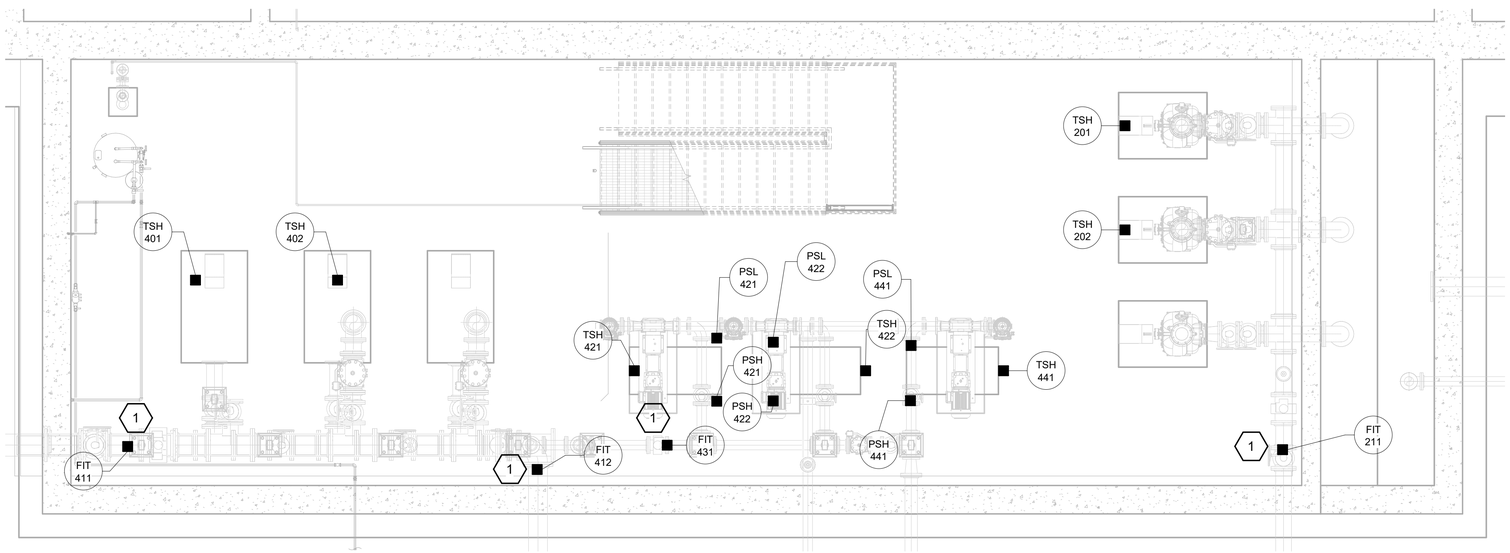

PROCESS BUILDING A LOWER LEVEL SMALL POWER AND LIGHTING PLAN

0 2' 4' 8'
SCALE IN FEET

NORTH

GEORGIA REGISTERED No. PE051935 PROFESSIONAL ENGINEER AKRAM FARIDI

06/26/2024

BURNS McDONNELL
4004 SUMMIT BLVD. NE, SUITE 1200
ATLANTA, GA 30319
770-587-4776
LICENSEE NO. PEF000100
AUTHORIZATION NO. J550903

date	detailed
11/16/23	S. GILLIAM
designed	**checked**
A. FARIDI	V.PATWARI

Perry

HOUSTON COUNTY, GEORGIA

EAST PERRY WWTF

PROCESS BUILDING A LOWER LEVEL INSTRUMENTATION PLAN

project	contract
148538	

drawing **500E107** – rev. **0**

sheet of sheets

file

Millimeters
Scale For Microfilming
Inches

no.	date	by	ckd	description
0	6/26/24	AF	BEG	ISSUED FOR CONSTRUCTION

KEYED NOTES:

1. STUB CONDUIT UP FROM DUCT BANK INTO JUNCTION BOX.
2. ROUTE ALL CONDUITS ALONG THE EDGE OF THE WALKWAY TO AVOID TRIPPING HAZARD.

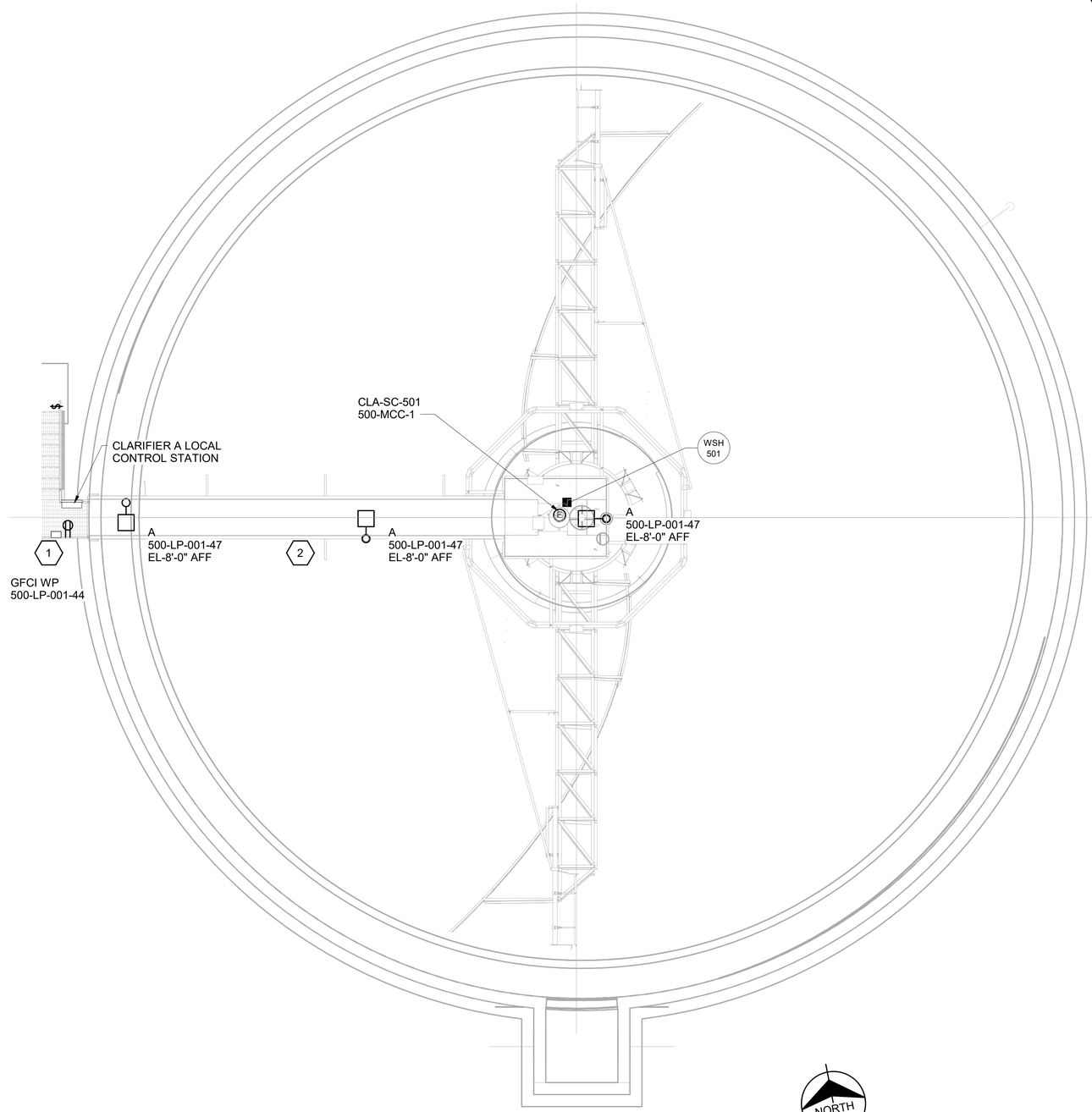

CLARIFIER A INSTRUMENTATION AND SMALL POWER PLAN

0 4' 8' 12'
SCALE IN FEET

GEORGIA REGISTERED No. PE051935 PROFESSIONAL ENGINEER AKRAM FARIDI

06/26/2024

BURNS McDONNELL
4004 SUMMIT BLVD. NE, SUITE 1200
ATLANTA, GA 30319
770-587-4776
LICENSEE NO. PEF000100
AUTHORIZATION NO. J550903

date	detailed
12/04/23	A.LILLY
designed	**checked**
A.FARIDI	V.PATWARI

Perry

HOUSTON COUNTY, GEORGIA

EAST PERRY WWTF

CLARIFIER A INSTRUMENTATION AND SMALL POWER PLAN

project	contract
148538	

drawing **600E101** – rev. **0**

sheet of sheets

file

no.	date	by	ckd	description
0	6/26/24	AF	BEG	ISSUED FOR CONSTRUCTION

KEYED NOTES:

1. STUB CONDUIT UP FROM DUCT BANK INTO JUNCTION BOX.
2. ROUTE ALL CONDUITS ALONG THE EDGE OF THE WALKWAY TO AVOID TRIPPING HAZARD.

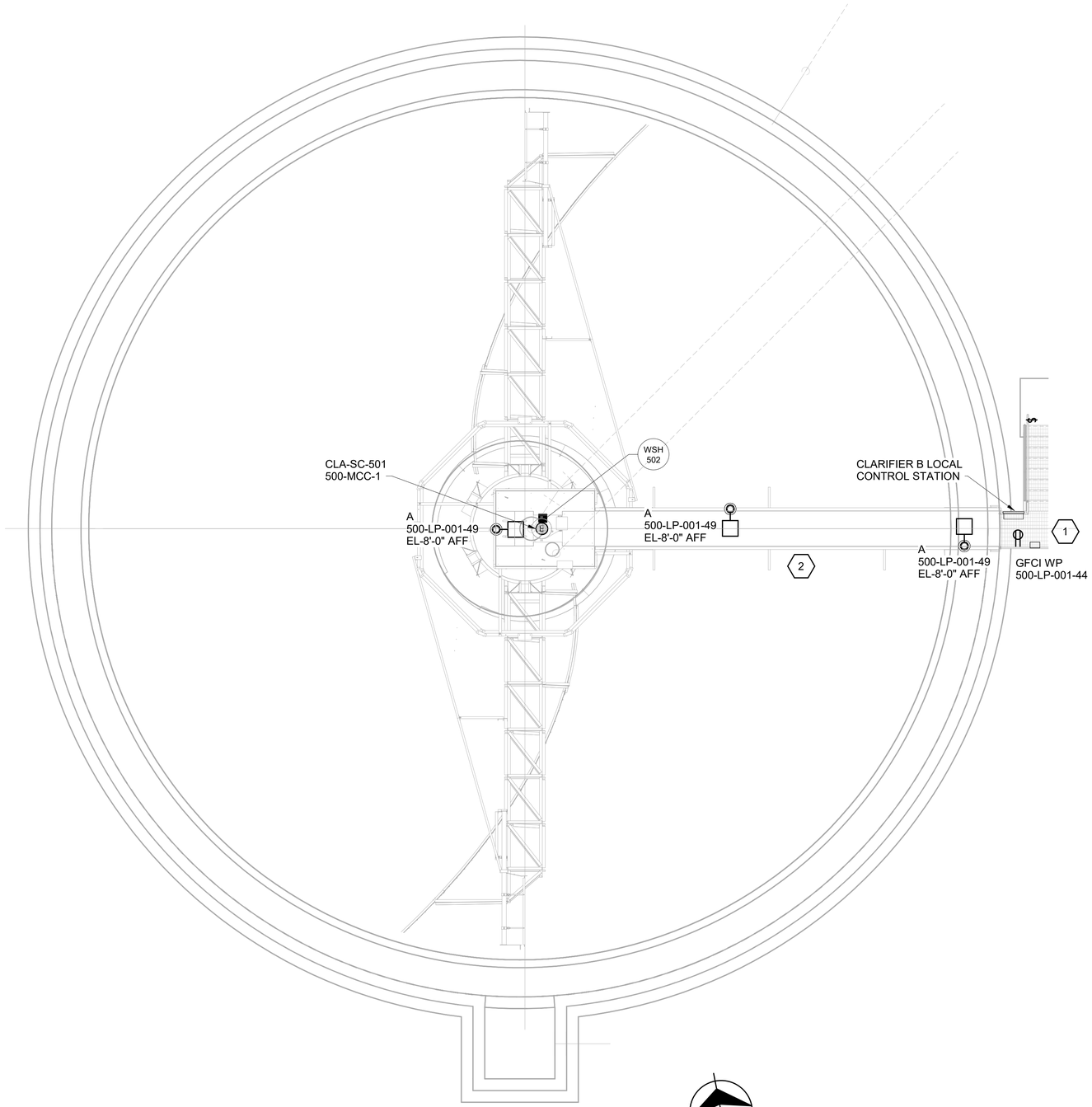

CLARIFIER B INSTRUMENT AND SMALL POWER PLAN

0 4' 8' 12'
SCALE IN FEET

BURNS McDONNELL
4004 SUMMIT BLVD. NE, SUITE 1200
ATLANTA, GA 30319
770-587-4776
LICENSEE NO. PEF000100
AUTHORIZATION NO. J550903

date	detailed
12/04/23	A.LILLY
designed	**checked**
A.FARIDI	V.PATWARI

Perry
HOUSTON COUNTY, GEORGIA

GEORGIA REGISTERED No. PE051935 PROFESSIONAL ENGINEER AKRAM FARIDI
06/26/2024

EAST PERRY WWTF
CLARIFIER B INSTRUMENTATION AND SMALL POWER PLAN

project	contract
148538	

drawing **600E102** – rev. **0**

sheet of sheets

file

no.	date	by	ckd	description
0	6/26/24	AF	BEG	ISSUED FOR CONSTRUCTION

KEYED NOTES:

1. SEE UV EQUIPMENT RACK MOUNTING DETAIL FOR ALL RACK MOUNTED ELECTRICAL EQUIPMENT.
2. TERMINATE GROUND CONDUCTOR PER MANUFACTURER RECOMMENDATIONS. ROUTE GROUNDING CONDUCTOR IN CONDUIT ALONG THE EDGE OF THE EQUIPMENT.

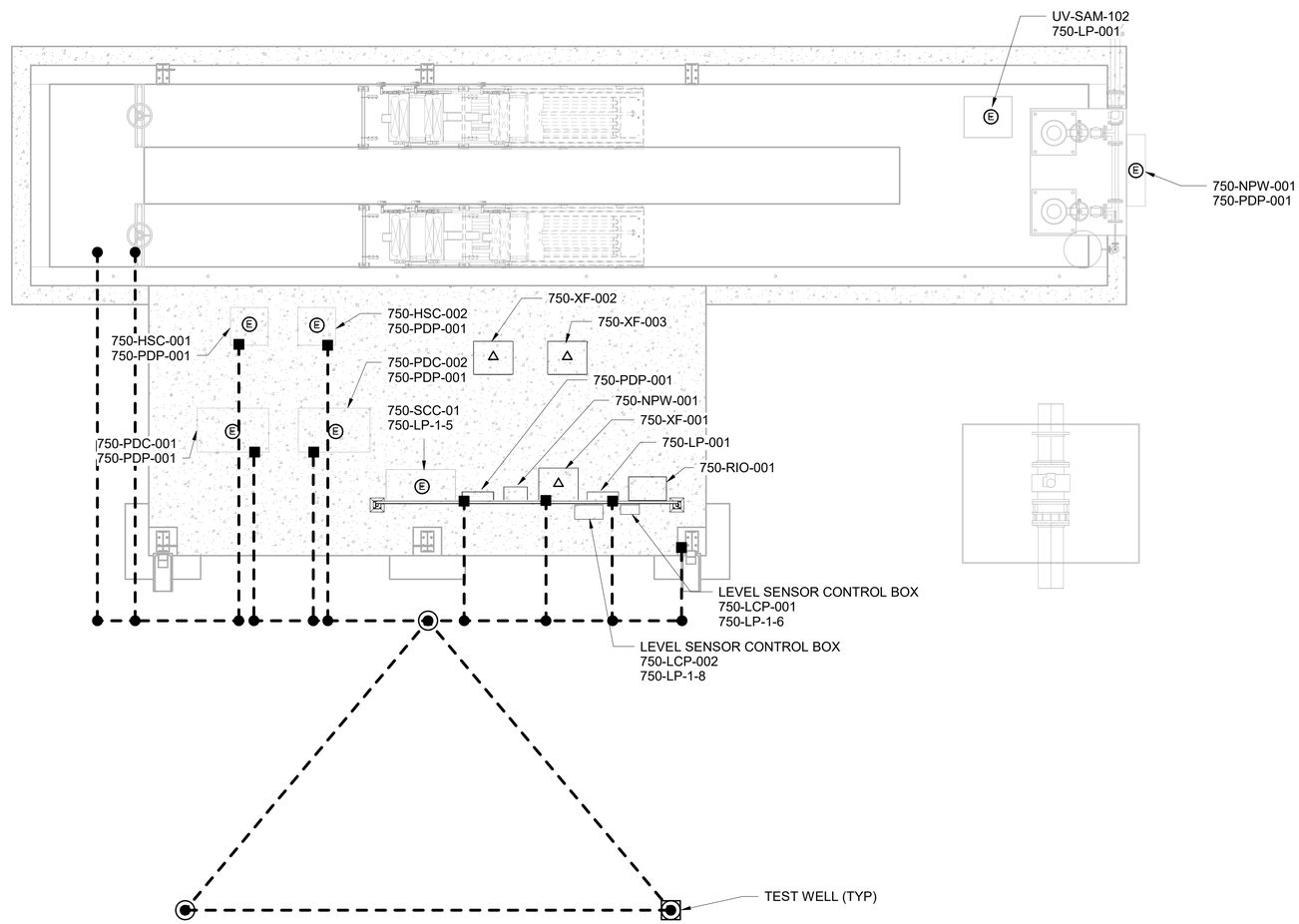

UV DISINFECTION POWER AND GROUNDING PLAN

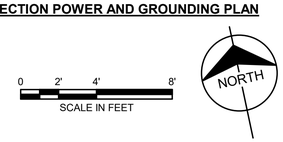

GEORGIA REGISTERED No. PE051935 PROFESSIONAL ENGINEER AKRAM FARIDI

06/26/2024

BURNS McDONNELL
4004 SUMMIT BLVD. NE, SUITE 1200
ATLANTA, GA 30319
770-587-4776
LICENSEE NO. PEF000100
AUTHORIZATION NO. J550903

date	detailed
AUGUST 2023	S.GILLIAM
designed	**checked**
A.FARIDI	V.PATWARI

Perry

HOUSTON COUNTY, GEORGIA

EAST PERRY WWTF

UV DISINFECTION POWER AND GROUNDING PLAN

project	contract
148538	

drawing **750E101** – rev. **0**

sheet of sheets

file

no.	date	by	ckd	description
0	6/26/24	AF	BEG	ISSUED FOR CONSTRUCTION

KEYED NOTES:

1. SUPPORT FIXTURES FROM ROOF PURLINS SUCH THAT IT DOES NOT HAVE AN EFFECT ON ROOF'S INTEGRITY.
2. RECEPTACLE SHALL HAVE WEATHER PROOF WHILE IN-USE COVERS.

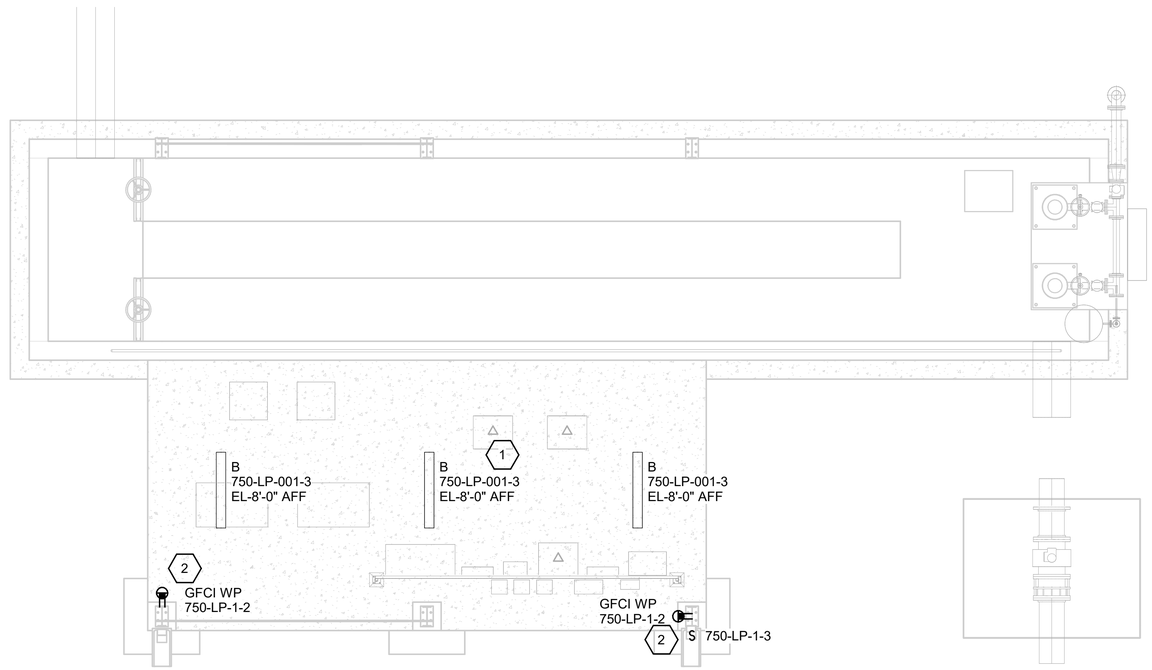

UV DISINFECTION LIGHTING AND SMALL POWER PLAN

0 2' 4' 8'
SCALE IN FEET

NORTH

GEORGIA REGISTERED No. PE051935 PROFESSIONAL ENGINEER AKRAM FARIDI

06/26/2024

BURNS McDONNELL
4004 SUMMIT BLVD. NE, SUITE 1200
ATLANTA, GA 30319
770-587-4776
LICENSEE NO. PEF000100
AUTHORIZATION NO. J550903

date	detailed
11/20/23	A. LILLY
designed	**checked**
A. FARIDI	B. GRAEBER

Perry
HOUSTON COUNTY, GEORGIA

EAST PERRY WWTF
UV DISINFECTION LIGHTING AND SMALL POWER PLAN

project	contract
148538	

drawing **750E102** – rev. **0**

sheet of sheets

file

Scale For Microfilming Millimeters Inches

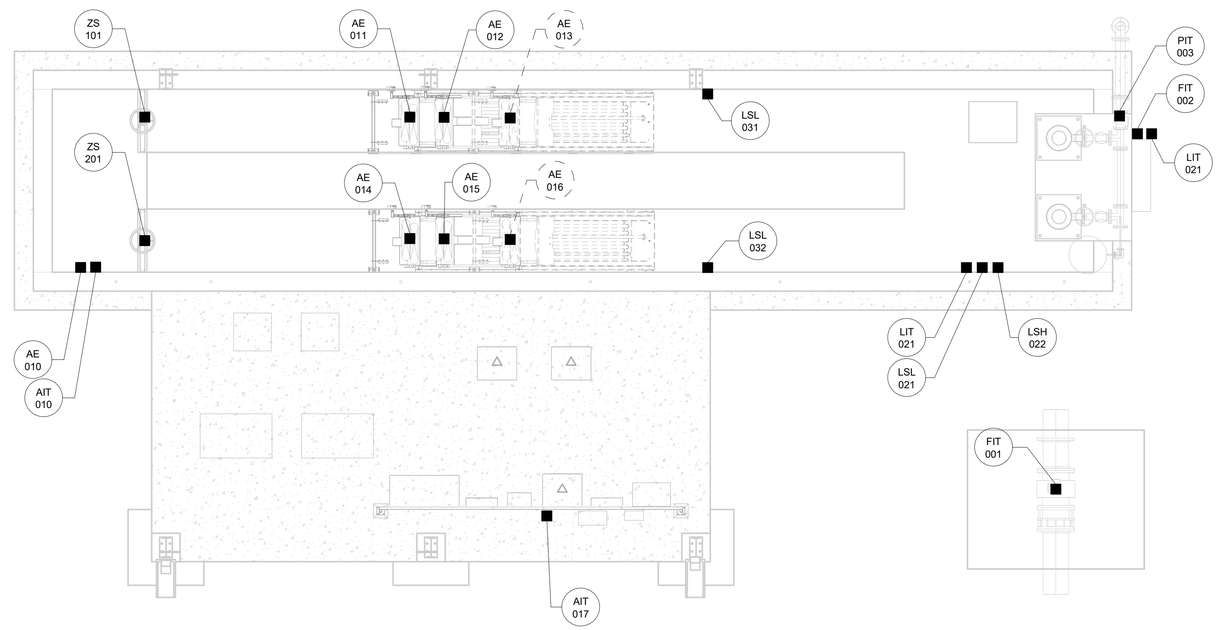

UV DISINFECTION INSTRUMENTATION PLAN

0 2' 4' 8'
SCALE IN FEET

NORTH

no.	date	by	ckd	description
0	6/26/24	AF	BEG	ISSUED FOR CONSTRUCTION

BURNS McDONNELL
4004 SUMMIT BLVD. NE, SUITE 1200
ATLANTA, GA 30319
770-587-4776
LICENSEE NO. PEF000100
AUTHORIZATION NO. J550903

date	detailed
11/16/23	A. LILLY
designed	**checked**
S. GILLIAM	B. GRAEBER

Perry
HOUSTON COUNTY, GEORGIA

GEORGIA REGISTERED No. PE051935 PROFESSIONAL ENGINEER AKRAM FARIDI
06/26/2024

EAST PERRY WWTF
UV DISINFECTION INSTRUMENTATION PLAN

project	contract
148538	

drawing **750E103** – rev. **0**

sheet of sheets

file

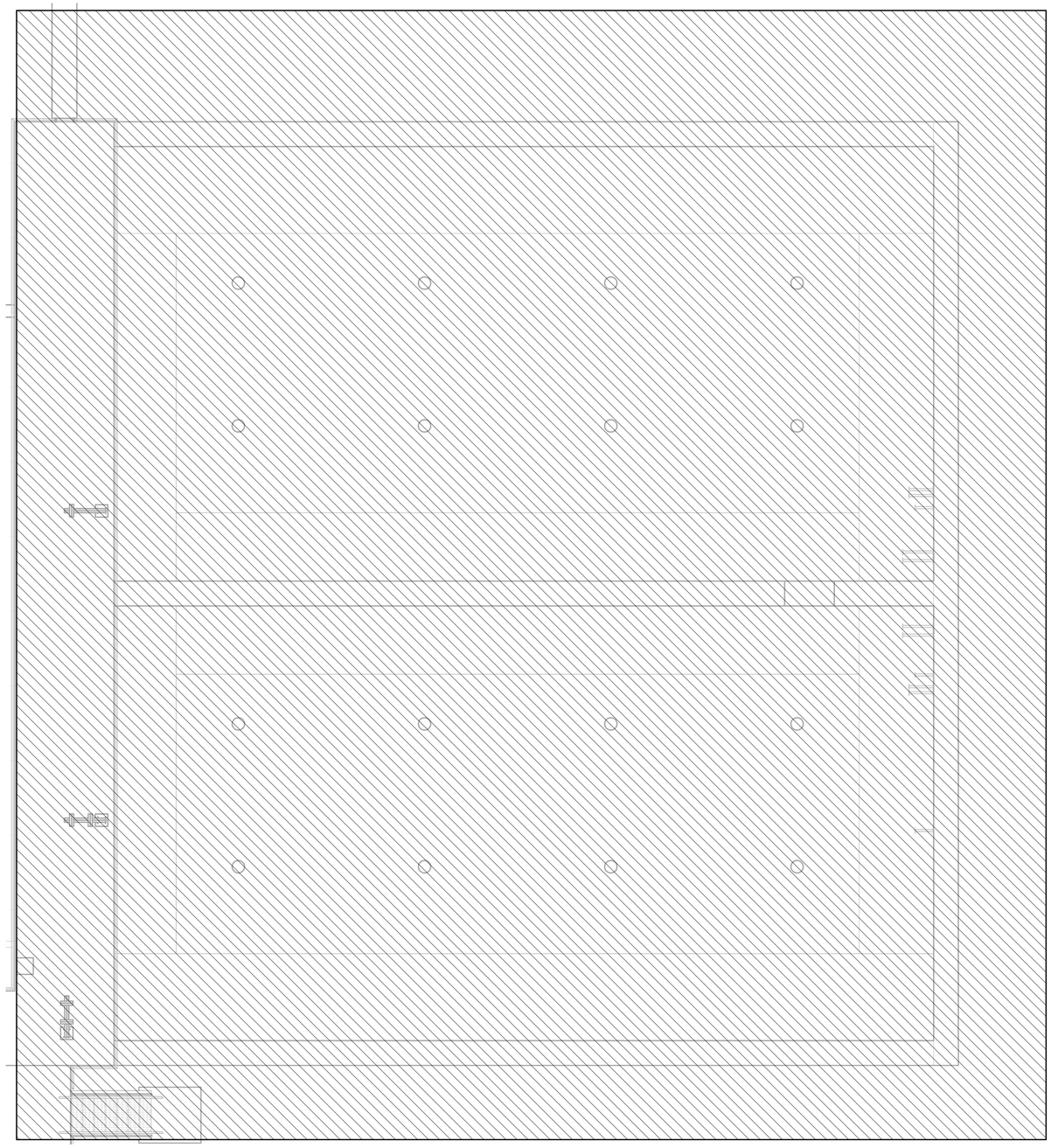

EXTENDS 10'-0" AROUND CHANNELS
(SEE 100E008 FOR DETAILS)

SOLIDS HOLDING AREA CLASSIFICATION PLAN

0 4' 8' 12'
SCALE IN FEET

NORTH

KEY:

- CLASS 1, DIVISION 1, GROUP C & D
- CLASS 1, DIVISION 2, GROUP C & D
- CLASS 1, DIVISION 2, GROUP C & D 12 AC/HR CONTINUOUS
- UNCLASSIFIED, 6 AC/HR CONTINUOUS
- UNCLASSIFIED

no.	date	by	ckd	description
0	6/26/24	AF	BEG	ISSUED FOR CONSTRUCTION

GEORGIA REGISTERED No. PE051936 PROFESSIONAL ENGINEER AKRAM FARIDI

06/26/2024

BURNS McDONNELL
4004 SUMMIT BLVD. NE, SUITE 1200
ATLANTA, GA 30319
770-587-4776
LICENSEE NO. PEF000100
AUTHORIZATION NO. J550903

date	detailed
09/27/23	A, LILLY
designed	**checked**
A.FARIDI	V.PATWARI

Perry

HOUSTON COUNTY, GEORGIA

EAST PERRY WWTF
SOLIDS HOLDING AREA CLASSIFICATION PLAN

project	contract
148538	

drawing **800E101** – rev. **0**

sheet of sheets

file

Scale For Microfilming
Millimeters
Inches

no.	date	by	ckd	description
0	6/26/24	AF	BEG	ISSUED FOR CONSTRUCTION

GENERAL NOTES:

1. SEE TYPICAL MOUNTING DETAIL FOR LUMINAIRE TO HANDRAIL AT CONTAINMENT BASIN WALL FOR ALL PROCESS BASIN FIXTURES.

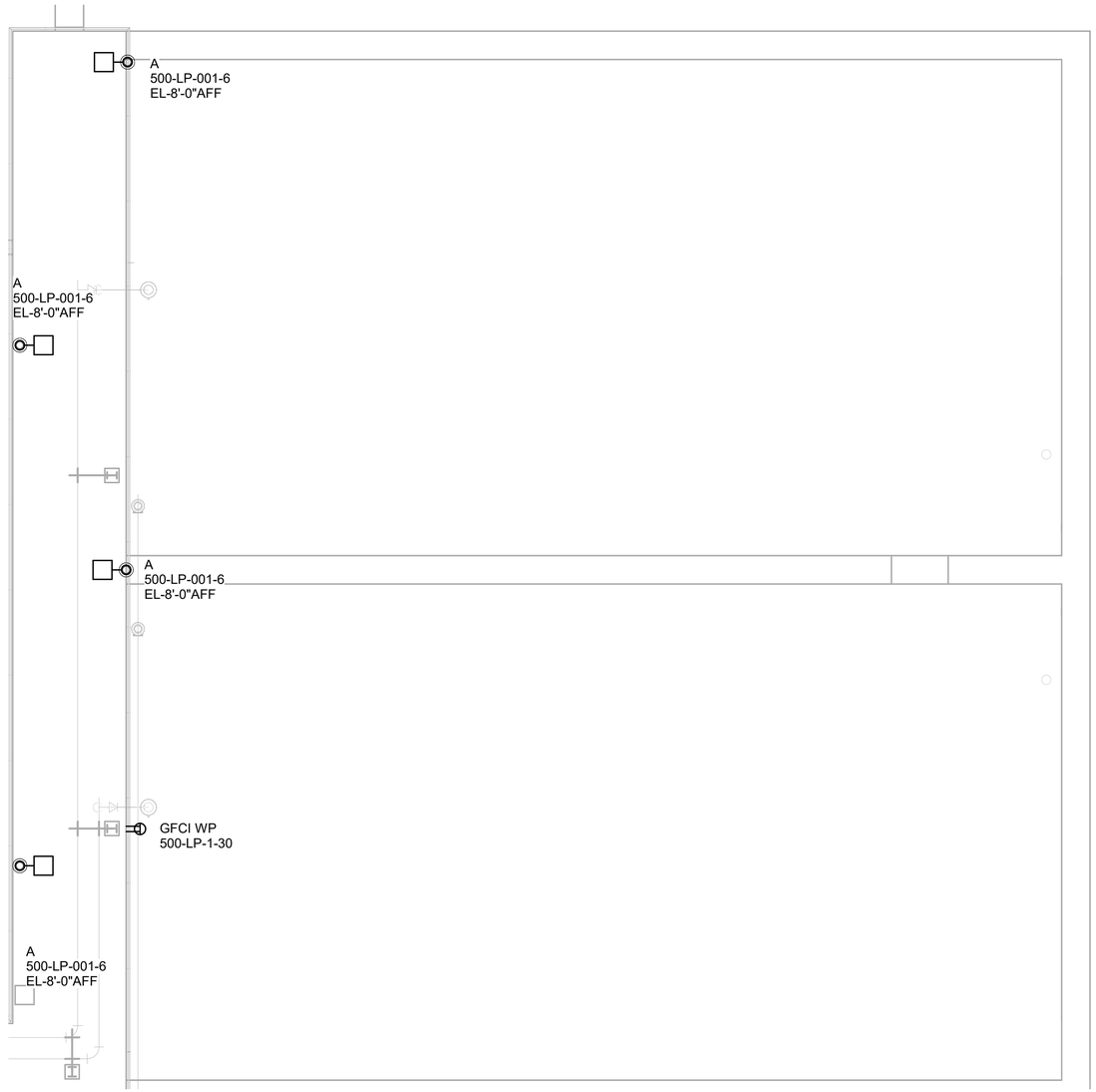

SOLIDS HOLDING BASIN A LIGHTING AND SMALL POWER PLAN

0 4' 8' 12'
SCALE IN FEET

NORTH

GEORGIA REGISTERED No. PE051936 PROFESSIONAL ENGINEER AKRAM FARIDI

06/26/2024

BURNS McDONNELL
4004 SUMMIT BLVD. NE, SUITE 1200
ATLANTA, GA 30319
770-587-4776
LICENSEE NO. PEF000100
AUTHORIZATION NO. J550903

date	detailed
11/16/23	A. LILLY
designed	**checked**
S. GILLIAM	B. GRAEBER

Perry
HOUSTON COUNTY, GEORGIA

EAST PERRY WWTF
SOLIDS HOLDING BASIN A LIGHTING AND SMALL POWER PLAN

project	contract
148538	

drawing **800E102** – rev. **0**

sheet of sheets

file

no.	date	by	ckd	description
0	6/26/24	AF	BEG	ISSUED FOR CONSTRUCTION

KEYED NOTES:

1. MOUNT TRANSMITTER ON RAILING MIN 30" ABOVE WALKWAY.
2. MOUNT SENSOR ON POLE AND FIX POLE TO RAILING.

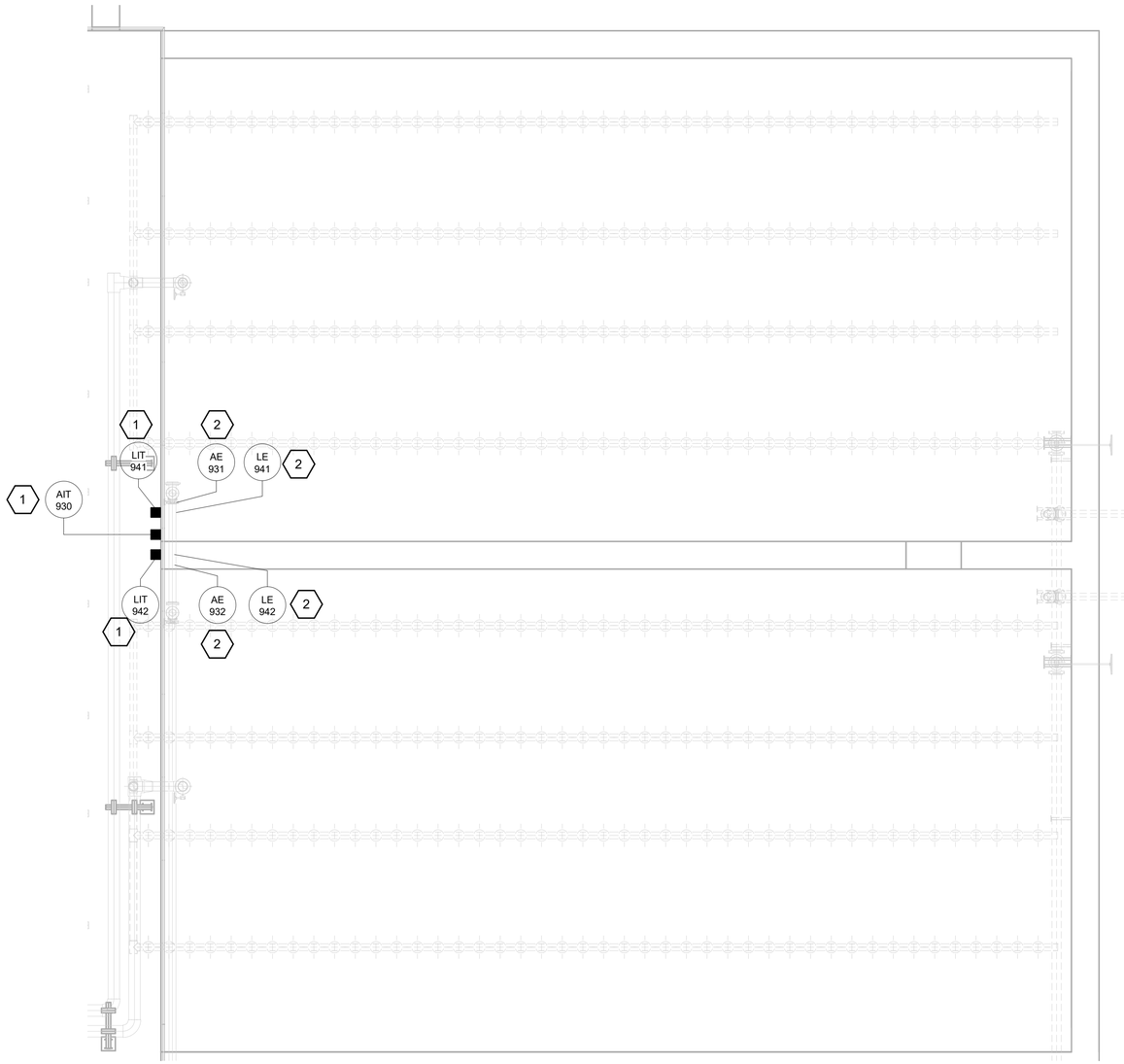

SOLIDS HOLDING BASIN A INSTRUMENTATION PLAN

0 4' 8' 12'
SCALE IN FEET

NORTH

GEORGIA REGISTERED No. PE051935 PROFESSIONAL ENGINEER AKRAM FARIDI

06/26/2024

BURNS McDONNELL
4004 SUMMIT BLVD. NE, SUITE 1200
ATLANTA, GA 30319
770-587-4776
LICENSEE NO. PEF000100
AUTHORIZATION NO. J550903

date	detailed
11/16/23	A. LILLY
designed	**checked**
S. GILLIAM	B. GRAEBER

Perry
HOUSTON COUNTY, GEORGIA

EAST PERRY WWTF
SOLIDS HOLDING BASIN A
INSTRUMENTATION PLAN

project	contract
148538	

drawing **800E103** – rev. **0**

sheet of sheets

file

Scale For Microfilming
Millimeters
Inches

no.	date	by	ckd	description
0	6/26/24	AF	BEG	ISSUED FOR CONSTRUCTION

KEY:

- CLASS 1, DIVISION 1, GROUP C & D
- CLASS 1, DIVISION 2, GROUP C & D
- CLASS 1, DIVISION 2, GROUP C & D 12 AC/HR CONTINUOUS
- UNCLASSIFIED, 6 AC/HR CONTINUOUS
- UNCLASSIFIED

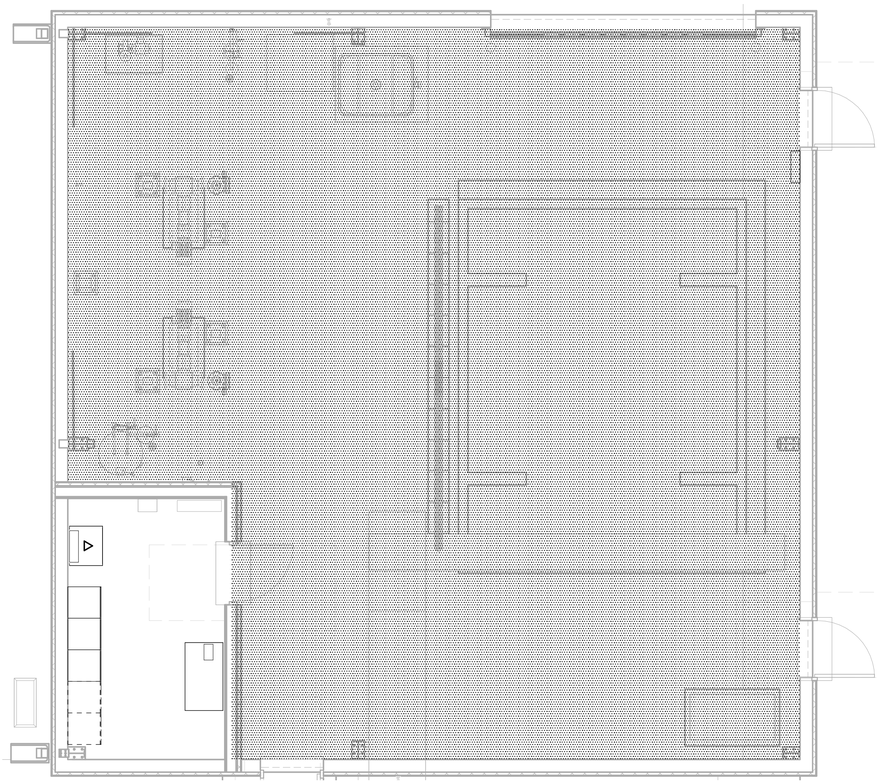

SOLIDS HANDLING AREA CLASSIFICATION PLAN

0 2' 4' 8'
SCALE IN FEET

NORTH

GEORGIA REGISTERED No. PE051936 PROFESSIONAL ENGINEER AKRAM FARIDI

06/26/2024

BURNS McDONNELL
4004 SUMMIT BLVD. NE, SUITE 1200
ATLANTA, GA 30319
770-587-4776
LICENSEE NO. PEF000100
AUTHORIZATION NO. J550903

date	detailed
09/27/23	A, LILLY
designed	**checked**
A.FARIDI	V.PATWARI

Perry
HOUSTON COUNTY, GEORGIA

EAST PERRY WWTF
SOLIDS HANDLING BUILDING AREA CLASSIFICATION PLAN

project	contract
148538	

drawing **850E101** – rev. **0**

sheet of sheets

file

Scale For Microfilming
Millimeters
Inches

no.	date	by	ckd	description
0	6/26/24	AF	BEG	ISSUED FOR CONSTRUCTION

KEYED NOTES:

1. GROUND STUCTURAL STEEL PER PRE-ENGINEERED BUILDING GROUNDING DETAIL.
2. PROVIDE GROUND REELS AT DUMPSTERS PER NEC.
3. ROUTE 2#12, 1#12 GRD. IN 3/4" CONDUIT TO DSS-02 FROM HP-02. INDOOR UNIT POWERED THROUGH OUTDOOR UNIT.

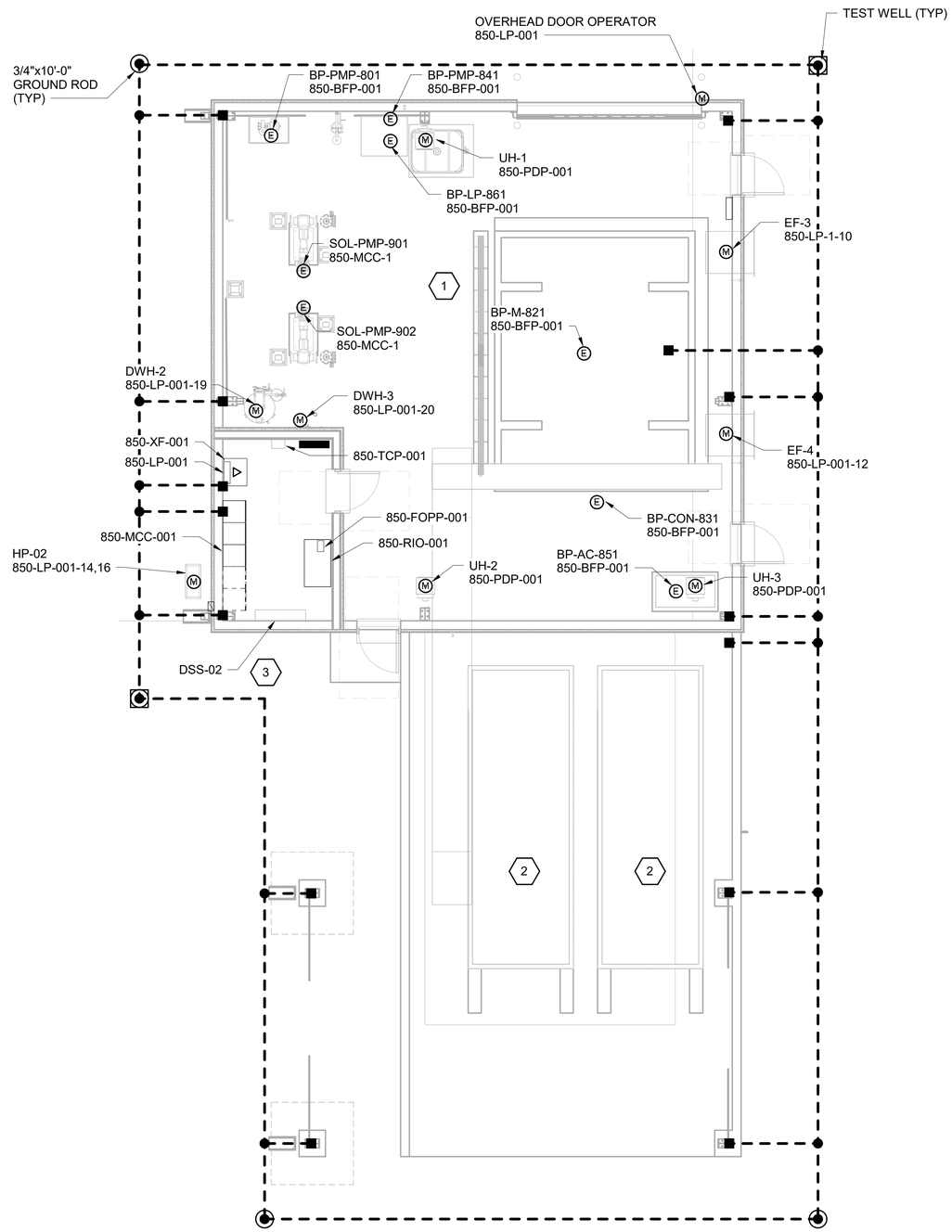

SOLIDS HANDLING GROUNDING AND POWER PLAN

0 4' 8' 12'
SCALE IN FEET

NORTH

GEORGIA REGISTERED No. PE051935 PROFESSIONAL ENGINEER AKRAM FARIDI

06/26/2024

BURNS McDONNELL
4004 SUMMIT BLVD. NE, SUITE 1200
ATLANTA, GA 30319
770-587-4776
LICENSEE NO. PEF000100
AUTHORIZATION NO. J550903

date	detailed
AUGUST 2023	S.GILLIAM
designed	**checked**
A.FARIDI	V.PATWARI

Perry
HOUSTON COUNTY, GEORGIA

EAST PERRY WWTF
SOLIDS HANDLING GROUNDING AND POWER PLAN

project	contract
148538	

drawing **850E102** – rev. **0**

sheet of sheets

file

Scale For Microfilming
Millimeters
Inches

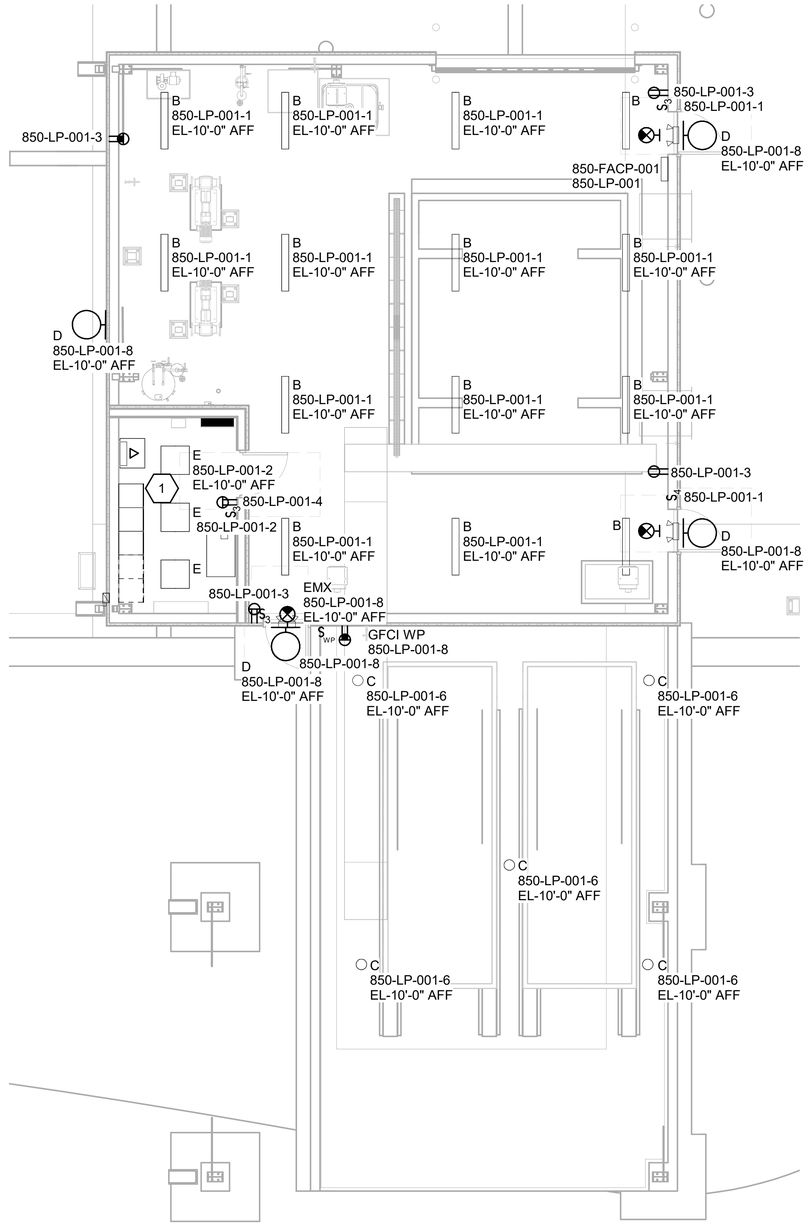

SOLIDS HANDLING LIGHTING AND SMALL POWER PLAN

0 4' 8' 12'
SCALE IN FEET

NORTH

GEORGIA REGISTERED No. PE051935 PROFESSIONAL ENGINEER AKRAM FARIDI

06/26/2024

no.	date	by	ckd	description
0	6/26/24	AF	BEG	ISSUED FOR CONSTRUCTION

BURNS McDONNELL
4004 SUMMIT BLVD. NE, SUITE 1200
ATLANTA, GA 30319
770-587-4776
LICENSEE NO. PEF000100
AUTHORIZATION NO. J550903

date	detailed
12/01/23	A. LILLY
designed	**checked**
A. FARIDI	B. GRAEBER

Perry
HOUSTON COUNTY, GEORGIA

EAST PERRY WWTF
SOLIDS HANDLING LIGHTING AND SMALL POWER PLAN

project	contract
148538	

drawing **850E103** – rev. **0**

sheet of sheets

file

KEYED NOTES:

1. FOR MAG METER GROUNDING REFER TO DETAIL ON DRAWING 100E502.

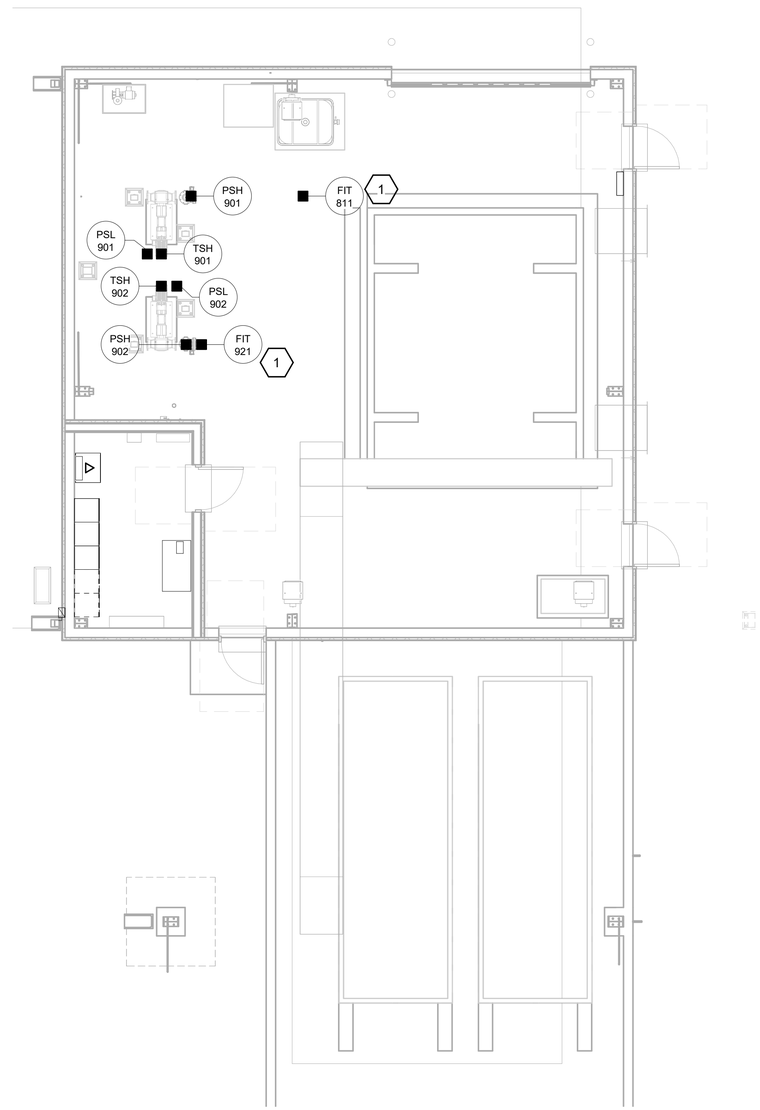

SOLIDS HANDLING INSTRUMENTATION PLAN

0 4' 8' 12'
SCALE IN FEET

NORTH

GEORGIA REGISTERED No. PE051935 PROFESSIONAL ENGINEER AKRAM FARIDI

06/26/2024

no.	date	by	ckd	description
0	6/26/24	AF	BEG	ISSUED FOR CONSTRUCTION

BURNS McDONNELL
4004 SUMMIT BLVD. NE, SUITE 1200
ATLANTA, GA 30319
770-587-4776
LICENSEE NO. PEF000100
AUTHORIZATION NO. J550903

date	detailed
11/16/23	A, LILLY
designed	**checked**
S. GILLIAM	B. GRAEBER

Perry

HOUSTON COUNTY, GEORGIA

EAST PERRY WWTF

SOLIDS HANDLING INSTRUMENTATION PLAN

project	contract
148538	

drawing **850E104** – rev. **0**

sheet of sheets

file

Scale For Microfilming
Millimeters
Inches